NIH Publication No: 07-4518

# BACKGROUND REVIEW DOCUMENT

# *In Vitro* Cytotoxicity Test Methods for Estimating Acute Oral Systemic Toxicity

## Volume 2 of 2

Interagency Coordinating Committee on the Validation of Alternative Methods (ICCVAM)

National Toxicology Program (NTP) Interagency Center for the Evaluation of Alternative Toxicological Methods (NICEATM)

National Institute of Environmental Health Sciences
National Institutes of Health
U. S. Public Health Service
Department of Health and Human Services

# THE INTERAGENCY COORDINATING COMMITTEE ON THE VALIDATION OF ALTERNATIVE METHODS and THE NTP INTERAGENCY CENTER FOR THE EVALUATION OF ALTERNATIVE TOXICOLOGICAL METHODS

In 1997, the National Institute of Environmental Health Sciences (NIEHS), one of the National Institutes of Health (NIH), established the Interagency Coordinating Committee on the Validation of Alternative Methods (ICCVAM) to:

- Coordinate interagency technical reviews of new and revised toxicological test methods, including alternative test methods that reduce, refine, or replace the use of animals

- Coordinate cross-agency issues relating to validation, acceptance, and national and international harmonization of new, modified, and alternative toxicological test methods

On December 19, 2000, the ICCVAM Authorization Act (42 U.S.C. § 2851-2, 2851-5 [2000]) established ICCVAM as a permanent interagency committee of NIEHS under the National Toxicology Program (NTP) Interagency Center for the Evaluation of Alternative Toxicological Methods (NICEATM).

ICCVAM is comprised of representatives from 15 U.S. Federal regulatory and research agencies that use, generate, or disseminate toxicological information. ICCVAM conducts technical evaluations of new, revised, and alternative methods with regulatory applicability. The Committee promotes the scientific validation and regulatory acceptance of toxicological test methods that more accurately assess the safety or hazards of chemicals and products and that refine (decrease or eliminate pain and distress), reduce, and/or replace animal use. NICEATM administers ICCVAM and provides scientific and operational support for ICCVAM-related activities. More information about ICCVAM and NICEATM can be found on the ICCVAM/NICEATM web site (http://iccvam.niehs.nih.gov) or obtained by contacting NICEATM (telephone: [919] 541-2384, e-mail: iccvam@niehs.nih.gov).

## The following Federal regulatory and research agencies are ICCVAM members:

Consumer Product Safety Commission
Department of Agriculture
Department of Defense
Department of Energy
Department of Health and Human Services
- Agency for Toxic Substances and Disease Registry
- Food and Drug Administration
- National Cancer Institute
- National Institute of Environmental Health Sciences
- National Institutes of Health, Office of the Director
- National Institute of Occupational Safety and Health
- National Library of Medicine

Department of the Interior
Department of Labor
- Occupational Safety and Health Administration

Department of Transportation
Environmental Protection Agency

***On the Cover***
The ICCVAM/NICEATM graphic symbolizes the important role of new and alternative toxicological methods in protecting and advancing the health of people, animals, and our environment.

# *In Vitro* Cytotoxicity Test Methods for Estimating Acute Oral Systemic Toxicity

## Background Review Document

## Volume 2 of 2

Prepared by
The National Toxicology Program (NTP) Interagency Center
for the Evaluation of Alternative Toxicological Methods (NICEATM)

National Institute of Environmental Health Sciences (NIEHS)
P.O. Box 12233
Mail Drop: EC-17
Research Triangle Park, NC 27709

**November 2006**
**NIH Publication No. 07-4518**

National Institute of Environmental Health Sciences
National Institutes of Health
U.S. Public Health Service
Department of Health and Human Services

**This document is available electronically at:**
***http://iccvam.niehs.nih.gov/methods/invitro.htm***

**Printed: 11/30/2006**

# TABLE OF CONTENTS

**APPENDICES** ..... **xiii**

**LIST OF FIGURES** ..... **xvi**

**LIST OF TABLES** ..... **xvii**

**LIST OF ACRONYMS AND ABBREVIATIONS** ..... **xx**

**ACKNOWLEDGMENTS** ..... **xxv**

**PREFACE** ..... **xxix**

**EXECUTIVE SUMMARY** ..... **xxxiii**

**VOLUME 1 OF 2**

**1.0 INTRODUCTION AND RATIONALE FOR THE USE OF *IN VITRO* NEUTRAL RED UPTAKE CYTOTOXICITY TEST METHODS TO PREDICT STARTING DOSES FOR *IN VIVO* ACUTE ORAL TOXICITY TESTING** ..... **1-3**

**1.1 Historical Background and Rationale for the Use of *In Vitro* Cytotoxicity Assays to Predict Starting Doses for Rodent Acute Oral Toxicity Tests** ..... **1-4**

1.1.1 The Multicentre Evaluation of *In Vitro* Cytotoxicity (MEIC) Program ..... 1-4

1.1.2 An International Evaluation of Selected *In Vitro* Toxicity Test Systems for Predicting Acute Systemic Toxicity ..... 1-6

1.1.3 The Registry of Cytotoxicity (RC) ..... 1-7

1.1.4 The ZEBET Initiative to Reduce Animal Use ..... 1-9

1.1.5 The International Workshop on *In Vitro* Methods for Assessing Acute Systemic Toxicity ..... 1-10

1.1.6 The NICEATM/ECVAM *In Vitro* NRU Cytotoxicity Study ..... 1-11

1.1.6.1 *Study Design* ..... 1-12

**1.2 Regulatory Rationale and Applicability for the Use of *In Vitro* Cytotoxicity Test Methods to Predict Starting Doses for Acute Oral Toxicity Testing in Rodents** ..... **1-14**

1.2.1 Current Regulatory Testing Requirements for Acute Oral Toxicity ..... 1-14

1.2.1.1 *Test Methods for Assessing Acute Oral Toxicity* ..... 1-16

1.2.2 Intended Regulatory Uses for *In Vitro* Cytotoxicity Test Methods ..... 1-16

1.2.3 Similarities and Differences in the Endpoints of *In Vitro* Cytotoxicity Test Methods and Rodent Acute Oral Toxicity Test Methods ..... 1-17

1.2.4 Use of *In Vitro* Cytotoxicity Test Methods in the Overall Strategy of Hazard Assessment ..... 1-18

**1.3 Scientific Basis for the *In Vitro* NRU Test Methods ..... 1-18**
1.3.1 Purpose and Mechanistic Basis of *In Vitro* NRU Test Methods ..... 1-19
1.3.2 Similarities and Differences in the Modes/Mechanisms of Action for *In Vitro* NRU Test Methods Compared with the Species of Interest ..... 1-20
1.3.3 Range of Substances Amenable to the *In Vitro* NRU Test Methods ..... 1-20

**2.0 TEST METHOD PROTOCOL COMPONENTS OF THE 3T3 AND NHK *IN VITRO* NRU TEST METHODS ..... 2-3**

**2.1 Basis for Selection of *In Vitro* NRU Cytotoxicity Test Methods..... 2-4**
2.1.1 *Guidance Document* Rationale for Selection of *In Vitro* NRU Cytotoxicity Test Methods..... 2-4
2.1.2 *Guidance Document* Rationale for Selection of Cell Types..... 2-4

**2.2 Overview of the 3T3 and NHK NRU Test Methods ..... 2-5**
2.2.1 The 3T3 NRU Test Method ..... 2-6
2.2.1.1 *Initiating and Subculturing 3T3 Cells* ..... 2-6
2.2.1.2 *Preparation of Cells for 96-well Plate Assays* ..... 2-8
2.2.1.3 *Reference Substance Application* ..... 2-8
2.2.2 The NHK NRU Test Method ..... 2-8
2.2.2.1 *Initiating and Subculturing NHK Cells* ..... 2-8
2.2.2.2 *Preparation of Cells for 96-well Plate Assays* ..... 2-8
2.2.2.3 *Reference Substance Application* ..... 2-9
2.2.3 Measurement of NRU in the 3T3 and NHK Test Methods ..... 2-9

**2.3 Descriptions and Rationales of the 3T3 and NHK NRU Test Methods ..... 2-9**
2.3.1 Materials, Equipment, and Supplies ..... 2-9
2.3.1.1 *3T3 Cells* ..... 2-9
2.3.1.2 *NHK Cells* ..... 2-10
2.3.1.3 *Tissue Culture Materials and Supplies* ..... 2-10
2.3.1.4 *Cell Culture Materials* ..... 2-10
2.3.1.5 *Equipment* ..... 2-10
2.3.1.6 *Culture Medium* ..... 2-11
2.3.2 Reference Substance Concentrations/Dose Selection ..... 2-12
2.3.2.1 *Range Finder Test* ..... 2-12
2.3.2.2 *Definitive Test* ..... 2-12
2.3.3 NRU Endpoints Measured ..... 2-13
2.3.3.1 *NRU and Measurement* ..... 2-13
2.3.3.2 *Determination of $IC_{50}$, $IC_{20}$, and $IC_{80}$ Values* ..... 2-13
2.3.4 Duration of Reference Substance Exposure ..... 2-14
2.3.5 Known Limits of Use ..... 2-14
2.3.5.1 *Solubility/Precipitation/Volatility* ..... 2-14
2.3.5.2 *Biokinetic Determinations* ..... 2-15
2.3.5.3 *Organ-Specific Toxicity* ..... 2-15

2.3.5.4 *The Role of Cytotoxicity Tests in an In Vitro Battery Approach for Possible Replacement of In Vivo Acute Toxicity Testing* ....2-15
2.3.6 Basis of the Response Assessed ....2-16
2.3.7 Appropriate Positive, Vehicle, and Negative Controls....2-16
2.3.7.1 *Positive Control* ....2-16
2.3.7.2 *Vehicle Control* ....2-16
2.3.7.3 *Negative Control* ....2-17
2.3.8 Acceptable Ranges of Control Responses ....2-17
2.3.8.1 *Vehicle Controls as a Quality Control Tool* ....2-18
2.3.9 Nature of Experimental Data Collected....2-18
2.3.9.1 *NRU OD Measurements* ....2-18
2.3.9.2 *Information and Data Collected* ....2-18
2.3.10 Data Storage Media ....2-19
2.3.11 Measures of Variability ....2-19
2.3.12 Methods for Analyzing NRU Data....2-20
2.3.13 Decision Criteria for Classification of Reference Substances ....2-20
2.3.14 Information and Data Included in the Test Report....2-20

**2.4 Proprietary Components of the *In Vitro* NRU Test Methods....2-22**

**2.5 Basis for the Number of Replicate and Repeat Experiments for the 3T3 and NHK NRU Test Methods....2-22**

**2.6 Basis for Modifications to the 3T3 and NHK NRU Test Method Protocols....2-22**
2.6.1 Phase Ia: Laboratory Evaluation Phase ....2-22
2.6.1.1 *NR Dye Crystals*....2-23
2.6.1.2 *3T3 Cell Growth*....2-23
2.6.1.3 *NHK Cell Growth*....2-23
2.6.1.4 *Vehicle Control OD Limits* ....2-24
2.6.1.5 *Precipitate Formation* ....2-24
2.6.1.6 *Dilution Factor* ....2-24
2.6.1.7 *Test Acceptance Criteria* ....2-25
2.6.2 Phase Ib: Laboratory Evaluation Phase ....2-25
2.6.2.1 *NR Crystal Formation* ....2-25
2.6.2.2 *Heating of Reference Substance Solutions* ....2-26
2.6.2.3 *Growth of Untreated Cells*....2-27
2.6.2.4 *Correction of Reference Substance OD Values* ....2-27
2.6.2.5 *Laboratory Error Rates* ....2-28
2.6.2.6 *Resultant Protocol Changes for Phase II*....2-28
2.6.2.7 *Test Acceptance Criteria* ....2-29
2.6.3 Phase II: Laboratory Qualification Phase ....2-29
2.6.3.1 *Testing of Volatile Reference Substances*....2-29
2.6.3.2 *Atypical Concentration-Responses* ....2-31
2.6.3.3 *Hill Function*....2-33
2.6.3.4 *Insoluble Reference Substances* ....2-33
2.6.3.5 *Inadequate Cell Growth in NHK Medium*....2-34

2.6.3.6 *Performance Standards for Media to Support NHK Growth* ..... 2-34
2.6.3.7 *Test Acceptance Criteria for Phase II* ..... 2-35
2.6.4 Phase III: Laboratory Testing Phase ..... 2-35
2.6.4.1 *Required Cytotoxicity Values* ..... 2-35
2.6.4.2 *Revisions to Data Analysis Procedures* ..... 2-35

**2.7 Differences Between the 3T3 and NHK NRU Protocols for the Validation Study and the *Guidance Document* Standard Protocols ..... 2-36**

**2.8 Overview of the Solubility Protocol ..... 2-37**

**2.9 Basis of the Solubility Protocol ..... 2-38**
2.9.1 Initial Solubility Protocol Development ..... 2-38
2.9.2 Basis for Modification of the Phase II Protocol ..... 2-39

**2.10 Components of the Solubility Protocol ..... 2-40**
2.10.1 Medium, Supplies, and Equipment Required ..... 2-40
2.10.1.1 *Medium and Chemical Supplies* ..... 2-40
2.10.1.2 *Equipment* ..... 2-40
2.10.1.3 *Procedures* ..... 2-40
2.10.2 Data Collection ..... 2-41
2.10.3 Variability in Solubility Measurements ..... 2-41
2.10.4 Solubility Issues During the Testing of the Reference Substances ..... 2-41
2.10.5 Analysis of Solubility Data ..... 2-41

**2.11 Summary ..... 2-42**

**3.0 REFERENCE SUBSTANCES USED FOR VALIDATION OF THE 3T3 AND NHK NRU TEST METHODS ..... 3-3**

**3.1 Rationale for the 72 Reference Substances Selected for Testing ..... 3-3**
3.1.1 Reference Substance Selection Criteria ..... 3-3
3.1.2 Candidate Reference Substances ..... 3-4
3.1.3 Selection of Reference Substances for Testing ..... 3-5

**3.2 Characteristics of the Selected Reference Substances ..... 3-6**
3.2.1 Source Databases Represented by the Selected Reference Substances ..... 3-6
3.2.2 Chemical Classes Represented by the Selected Reference Substances ..... 3-28
3.2.3 Product/Use Classes Represented by the Selected Reference Substances ..... 3-28
3.2.4 Toxicological Characteristics of the Selected Reference Substances ..... 3-28
3.2.4.1 *Corrosivity* ..... 3-28
3.2.4.2 *Toxicity Targets* ..... 3-32
3.2.4.3 *Metabolism* ..... 3-32
3.2.5 Selection of Reference Substances for Testing in Phases Ib and II ..... 3-32

3.2.6 Unsuitable and Challenging Reference Substances .....3-34

**3.3 Reference Substance Procurement, Coding, and Distribution.....3-34**

3.3.1 Exceptions.....3-35

**3.4 Reference Substances Recommended by the *Guidance Document*.....3-35**

**3.5 Summary .....3-36**

**4.0 RODENT ACUTE ORAL $LD_{50}$ REFERENCE VALUES USED TO ASSESS THE ACCURACY OF THE 3T3 AND NHK NRU TEST METHODS .....4-3**

**4.1 Methods Used to Obtain Rodent Acute Oral $LD_{50}$ Reference Values .....4-3**

4.1.1 Identification of Candidate Rodent Acute Oral $LD_{50}$ Reference Data .....4-3

4.1.2 Criteria Used to Select Candidate Rodent Acute Oral Data for Determination of $LD_{50}$ Reference Values.....4-5

4.1.2.1 *Final Exclusion Criteria* .....4-6

4.1.2.2 *Assumptions Regarding Materials, Animals, and Methods* .....4-6

4.1.2.3 *Calculation Reference $LD_{50}$ Values* .....4-7

4.1.2.4 *Use of Rat and Mouse Data*.....4-7

**4.2 Final Rodent Acute Oral $LD_{50}$ Reference Values .....4-7**

**4.3 Relevant Toxicity Information for Humans.....4-8**

**4.4 Accuracy and Reliability of the Rodent Acute Oral $LD_{50}$ Reference Values .....4-13**

4.4.1 Variability Among the Acceptable $LD_{50}$ Values.....4-13

4.4.2 Comparison of Rodent Acute Oral $LD_{50}$ Reference Values with the Corresponding RC $LD_{50}$ Values .....4-14

4.4.3 Comparison of the Variability Among Acceptable $LD_{50}$ Values to Those Obtained in Other Studies.....4-15

**4.5 Summary .....4-16**

**5.0 3T3 AND NHK NRU TEST METHOD DATA AND RESULTS .....5-3**

**5.1 Study Timeline and Participating Laboratories .....5-3**

5.1.1 Statements of Work (SOW) and Protocols .....5-3

5.1.2 Study Timeline .....5-4

5.1.3 Participating Laboratories.....5-4

**5.2 Coded Reference Substances and GLP Guidelines.....5-5**

5.2.1 Coded Reference Substances .....5-5

5.2.2 Lot-to-Lot Consistency of Reference Substances .....5-5

5.2.3 Adherence to GLP Guidelines.....5-5

**5.3 3T3 and NHK NRU Test Method Protocols.....5-5**

5.3.1 Phase Ia: Laboratory Evaluation Phase .....5-6

5.3.1.1 *Protocol Changes and the Effect on the Data* ..... 5-6
5.3.2 Phase Ib: Laboratory Evaluation Phase ..... 5-6
5.3.2.1 *Protocol Changes and the Effect on the Data* ..... 5-7
5.3.3 Phase II: Laboratory Qualification Phase ..... 5-7
5.3.3.1 *Protocol Changes and the Effect on the Data* ..... 5-8
5.3.4 Phase III: Main Validation Phase ..... 5-9
5.3.4.1 *Protocol Changes and the Effect on the Data* ..... 5-9

**5.4 Data Used to Evaluate Test Method Accuracy and Reliability ..... 5-10**
5.4.1 PC Data ..... 5-10
5.4.1.1 *Phase Ib PC Data Acceptance Limits* ..... 5-12
5.4.1.2 *Phase II PC Data Acceptance Limits* ..... 5-12
5.4.1.3 *Phase III PC Data Acceptance Limits* ..... 5-12
5.4.2 Reference Substance Data ..... 5-12

**5.5 Statistical Approaches to the Evaluation of 3T3 and NHK Data ..... 5-26**
5.5.1 Statistical Analyses for Phase Ia Data ..... 5-27
5.5.1.1 *Outlier Determination for Replicate Well Concentration Data* ..... 5-27
5.5.1.2 *Curve Fit Criteria* ..... 5-27
5.5.1.3 *Reproducibility Analyses for PC $IC_{50}$ Values* ..... 5-27
5.5.2 Statistical Analyses for Phase Ib Data ..... 5-28
5.5.2.1 *Outlier Determination for Replicate Well Concentration Data* ..... 5-28
5.5.2.2 *Reproducibility Analyses of the Reference Substance $IC_{50}$ Values* ..... 5-28
5.5.3 Statistical Analyses for Phase II Data ..... 5-28
5.5.3.1 *Outlier Determination for Replicate Well Concentration Data* ..... 5-28
5.5.3.2 *Reproducibility Analyses of the Reference Substance $IC_{50}$ Values* ..... 5-28
5.5.3.3 *Comparison of 3T3 and NHK Test Results with the RC Millimole Regression* ..... 5-29
5.5.4 Statistical Analyses for Phase III Data ..... 5-29
5.5.4.1 *Outlier Determination for Replicate Well Concentration Data* ..... 5-29
5.5.4.2 *Reproducibility Analyses of the PC $IC_{50}$ Data* ..... 5-29
5.5.4.3 *Reproducibility Analyses of the Reference Substance $IC_{50}$ Values* ..... 5-30
5.5.4.4 *Comparison of 3T3 and NHK Test Results with the RC Millimole Regression* ..... 5-31
5.5.5 Summary of the Data Used for Statistical Analyses ..... 5-32

**5.6 Summary of NRU Test Results ..... 5-32**

**5.7 Availability of Data ..... 5-38**

**5.8 Solubility Test Results ..... 5-38**

5.8.1 Solubility Data.....5-43
5.8.2 Solubility and Volatility Effects in the Cytotoxicity Tests.....5-43

**5.9 Summary .....5-44**

**6.0 ACCURACY OF THE 3T3 AND NHK NRU TEST METHODS .....6-3**

**6.1 Accuracy of the 3T3 and NHK NRU Test Methods for Predicting Rodent Acute Oral Toxicity.....6-5**
6.1.1 Linear Regression Analyses for the Prediction of Rat Acute Oral $LD_{50}$ Values from *In Vitro* $IC_{50}$ Values.....6-5
6.1.2 Comparison of Combined-Laboratory 3T3 and NHK Regressions to the RC Millimole Regression .....6-8

**6.2 Analysis of Outlier Substances for the RC Millimole Regression .....6-9**
6.2.1 Identification of Outlier Substances .....6-10
6.2.2 Evaluation of Outlier Substances .....6-12
6.2.2.1 *Physical Characteristics*.....6-12
6.2.2.2 *Chemical Class* .....6-12
6.2.2.3 *Solubility*.....6-13
6.2.2.4 *Metabolism*.....6-13
6.2.2.5 *Mechanism of Toxicity*.....6-13

**6.3 Improving the Prediction of *In Vivo* Rat Oral $LD_{50}$ Values from *In Vitro* $IC_{50}$ Data .....6-17**
6.3.1 The RC Rat-Only Millimole Regression .....6-17
6.3.2 The RC Rat-Only Weight Regression .....6-17

**6.4 Accuracy of the 3T3 and NHK NRU Test Methods for Predicting GHS Acute Oral Toxicity Categories .....6-18**
6.4.1 Prediction of GHS Acute Oral Toxicity Category by the RC $IC_{50}$ Values Using the RC Millimole Regression.....6-20
6.4.2 Prediction of GHS Acute Oral Toxicity Category by the 3T3 and NHK NRU Test Methods Using the RC Rat-Only Millimole Regression.....6-22
6.4.2.1 *In Vitro – In Vivo Concordance Using the RC Rat-Only Millimole Regression*.....6-22
6.4.2.2 *Discordant Substances in the Prediction of GHS Acute Oral Toxicity Category by the 3T3 and NHK NRU Test Methods and the RC Rat-Only Millimole Regression*.....6-24
6.4.3 Prediction of GHS Acute Oral Toxicity Category by the 3T3 and NHK NRU Test Methods Using the RC Rat-Only Weight Regression.....6-24
6.4.3.1 *In Vitro – In Vivo Concordance Using the RC Rat-Only Weight Regression*.....6-25
6.4.3.2 *Discordant Substances in the Prediction of GHS Acute Oral Toxicity Category by the 3T3 and NHK NRU Test Methods and the RC Rat-Only Weight Regression*.....6-27

6.4.4 Summary of the Regressions Evaluated ..... 6-27

**6.5 Correlation of NRU Concentration-Response Slope with Rat Lethality Dose-Response Slope ..... 6-28**

**6.6 Strengths and Limitations of the Use of *In Vitro* Cytotoxicity Test Methods with the $IC_{50}$–$LD_{50}$ Regressions for Prediction of Rodent Acute Oral Toxicity ..... 6-31**

6.6.1 *In Vitro* Cytotoxicity Methods ..... 6-31

6.6.2 Use of Mole-Based vs. Weight-Based Regressions for the Prediction of Toxicity for Low and High Molecular Weight Substances ..... 6-31

**6.7 Salient Issues of Data Interpretation ..... 6-34**

**6.8 Comparison of NRU Test Results to Established Performance Standards ..... 6-34**

**6.9 Summary ..... 6-40**

**7.0 RELIABILITY OF THE 3T3 AND NHK TEST METHODS ..... 7-3**

**7.1 Reference Substances Used to Determine the Reliability of the 3T3 and NHK Test Methods ..... 7-3**

**7.2 Reproducibility Analyses for the 3T3 and NHK Test Methods ..... 7-5**

7.2.1 Comparison of Laboratory-Specific $IC_{50}$-$LD_{50}$ Linear Regression Analyses to the Mean Laboratory Regression ..... 7-5

7.2.2 ANOVA Results for the 3T3 and NHK NRU Test Methods ..... 7-5

7.2.2.1 *Differences Among the $IC_{50}$ Values in Laboratories Using the 3T3 NRU Test Method* ..... 7-5

7.2.2.2 *Differences Among the $IC_{50}$ Values in Laboratories Using the NHK NRU Test Method* ..... 7-21

7.2.3 CV Results for the 3T3 and NHK NRU Test Methods ..... 7-21

7.2.3.1 *Reproducibility of Intralaboratory CV Values* ..... 7-21

7.2.3.2 *Reproducibility of Interlaboratory CV Values* ..... 7-34

7.2.3.3 *Variation of CV with Chemical Property* ..... 7-34

7.2.3.4 *Results of the Intralaboratory CV Analysis* ..... 7-35

7.2.3.5 *Results of the Interlaboratory CV Analysis* ..... 7-37

7.2.4 Comparison of Maximum to Minimum $IC_{50}$ Values Using Laboratory Means ..... 7-39

7.2.5 Comparison of Maximum:Minimum $IC_{50}$ Ratios with the Maximum:Minimum $LD_{50}$ Ratios ..... 7-40

7.2.6 Normalization of Reference Substance $IC_{50}$ Values Using SLS $IC_{50}$ Values ..... 7-42

**7.3 Historical Positive Control (PC) Data ..... 7-44**

7.3.1 ANOVA and Linear Regression Results for the 3T3 NRU Test Method ..... 7-46

7.3.1.1 *Variation of the SLS $IC_{50}$ Values with Time* ..... 7-46

7.3.1.2 *Comparison of SLS $IC_{50}$ Values Among the Laboratories* ..... 7-46

7.3.2 ANOVA and Linear Regression Results for the NHK NRU Test Method ....7-48
7.3.2.1 *Variation of SLS $IC_{50}$ Values with Time* ....7-48
7.3.2.2 *Comparison of SLS $IC_{50}$ Values Among the Laboratories* ....7-48

**7.4 Laboratory Concordance for Solvent Selection ....7-50**

**7.5 Summary ....7-52**

**8.0 3T3 AND NHK NRU TEST METHOD DATA QUALITY ....8-3**

**8.1 Compliance with Good Laboratory Practice Regulations ....8-3**
8.1.1 Guidelines Followed for Cytotoxicity Testing ....8-3
8.1.1.1 *Good Laboratory Practices* ....8-3
8.1.1.2 *Spirit of GLP* ....8-3
8.1.1.3 *Good Cell Culture Practices (GCCP)* ....8-4
8.1.2 Quality Assurance (QA) for NRU Cytotoxicity Test Data ....8-4
8.1.2.1 *Coded Reference Substances* ....8-4
8.1.2.2 *Solubility Testing and Data Review* ....8-5
8.1.2.3 *NRU Cytotoxicity Test Tallies* ....8-5
8.1.3 Guidelines Followed for Rodent Acute Oral $LD_{50}$ Data Collection ....8-6
8.1.3.1 *Rodent Acute Oral $LD_{50}$ Values Used in the Registry of Cytotoxicity (RC)* ....8-6
8.1.3.2 *Rodent Acute Oral $LD_{50}$ Values Collected by NICEATM from Other Sources* ....8-6

**8.2 Results of Data Quality Audits ....8-6**
8.2.1 QA Statements ....8-6
8.2.2 QA Statements from the Laboratories ....8-7
8.2.2.1 *BioReliance QA Statements* ....8-7
8.2.2.2 *FAL QA Statements* ....8-7
8.2.2.3 *ECBC QA Statements* ....8-7
8.2.2.4 *IIVS QA Statements* ....8-8
8.2.2.5 *Other QA Information* ....8-8

**8.3 Effect of Deviations or Non-compliance with GLPs ....8-9**
8.3.1 Laboratory Error Rates ....8-9
8.3.2 Failure Rates for Definitive and PC Tests ....8-10
8.3.3 Intralaboratory Reproducibility ....8-11
8.3.4 Prediction of GHS Acute Oral Toxicity Categories ....8-12

**8.4 Availability of Laboratory Notebooks ....8-12**

**8.5 Summary ....8-13**

**9.0 OTHER SCIENTIFIC REPORTS AND REVIEWS OF *IN VITRO* CYTOTOXICITY TEST METHODS AND THEIR ABILITY TO PREDICT *IN VIVO* ACUTE TOXICITY AND OTHER TOXIC EFFECTS ....9-3**

**9.1 Relevant Studies ..... 9-3**
9.1.1 Correlation of NRU Cytotoxicity Values with Rodent Lethality ..... 9-3
9.1.1.1 *Peloux et al. (1992)* ..... 9-4
9.1.1.2 *Fautrel et al. (1993)* ..... 9-5
9.1.1.3 *Roguet et al. (1993)* ..... 9-5
9.1.1.4 *Rasmussen (1999)* ..... 9-6
9.1.1.5 *Creppy et al. (2004)* ..... 9-7
9.1.2 Use of *In Vitro* Cytotoxicity Data to Reduce the Use of Animals in Acute Oral Toxicity Testing ..... 9-7
9.1.2.1 *Halle et al. (1997): Animal Savings with the ATC Method Using Cytotoxicity Data* ..... 9-7
9.1.2.2 *Spielmann et al. (1999): Animal Savings Using Cytotoxicity Data with the UDP* ..... 9-9
9.1.2.3 *EPA (2004): U.S. EPA HPV Challenge Program Submission* ..... 9-10
9.1.3 Other Evaluations of 3T3 or NHK NRU Methods ..... 9-10
9.1.3.1 *Draize Eye Irritation* ..... 9-11
9.1.3.2 *Predicting Human Lethal Blood Concentrations (LC)* ..... 9-13

**9.2 Independent Scientific Reviews ..... 9-13**
9.2.1 *In Vitro* Acute Toxicity Testing for the Classification and Labeling of Chemicals ..... 9-13
9.2.1.1 *Seibert et al. (1996): ECVAM Workshop 16* ..... 9-13
9.2.2 Use of *In Vitro* Cytotoxicity Data for Estimation of Starting Doses for Acute Oral Toxicity Testing ..... 9-14
9.2.2.1 *ICCVAM (2001a): Estimation of Animal Savings Using Cytotoxicity Data with the ATC Method* ..... 9-14
9.2.2.2 *ICCVAM (2001a): Estimation of Animal Savings Using Cytotoxicity Data with the UDP* ..... 9-16
9.2.3 Validation of 3T3 NRU Assay for Phototoxicity ..... 9-17
9.2.3.1 *NHK NRU Phototoxicity Assay* ..... 9-17

**9.3 Studies Using *In Vitro* Cytotoxicity Test Methods with Established Performance Standards ..... 9-18**
9.3.1 *Guidance Document (ICCVAM 2001b)* ..... 9-18
9.3.2 King and Jones (2003) ..... 9-19
9.3.3 A-Cute-Tox Project: Optimization and Pre-Validation of an *In Vitro* Test Strategy for Predicting Human Acute Toxicity (Clemedson 2005) ..... 9-19

**9.4 Summary ..... 9-20**

**10.0 ANIMAL WELFARE CONSIDERATIONS (REFINEMENT, REDUCTION, AND REPLACEMENT) ..... 10-3**

**10.1 Use of 3T3 and NHK NRU Test Methods to Predict Starting Doses for Rodent Acute Oral Toxicity Assays ..... 10-4**

**10.2 Reduction and Refinement of Animal Use for the UDP .....10-4**
10.2.1 *In Vivo* Testing Using the UDP.....10-4
10.2.1.1 *Main Test* .....10-4
10.2.1.2 *Limit Test* .....10-5
10.2.2 Computer Simulation Modeling of the UDP .....10-6
10.2.3 Animal Savings in the UDP When Using 3T3- and NHK-Based Starting Doses .....10-7
10.2.3.1 *The Effect of the Dose-Mortality Slope on Animal Use*.....10-7
10.2.3.2 *Mean Animal Use for UDP Simulations – Comparison of Regressions and Predictions from the 3T3 and NHK NRU Test Methods* .....10-9
10.2.3.3 *Animal Savings in the UDP by GHS Acute Oral Toxicity Category Using 3T3- and NHK-Based Starting Doses* .....10-9
10.2.4 Refinement of Animal Use for the UDP When Using 3T3- and NHK-Based Starting Doses.....10-15
10.2.5 Accuracy of the UDP Outcomes Using the $IC_{50}$-Based Starting Doses .....10-16

**10.3 Reduction and Refinement of Animal Use in the ATC Method .....10-16**
10.3.1 *In Vivo* Testing Using the ATC Method.....10-16
10.3.1.1 *Main Test* .....10-17
10.3.1.2 *Limit Test* .....10-17
10.3.2 Computer Simulation Modeling of the ATC Method .....10-17
10.3.3 Animal Savings for the ATC Method When Using 3T3- and NHK-Based Starting Doses .....10-18
10.3.3.1 *The Effect of Dose-Mortality Slope on Animal Use*.....10-18
10.3.3.2 *Mean Animal Use for ATC Simulations – Comparison of Regressions and Predictions from the 3T3 and NHK NRU Test Methods* .....10-20
10.3.3.3 *Animal Savings in the ATC Method by GHS Acute Oral Toxicity Category Using* the *3T3- and NHK-Based Starting Doses*.....10-22
10.3.4 Refinement of Animal Use in the ATC Method When Using 3T3- and NHK-Based Starting Doses.....10-26
10.3.5 Accuracy of the ATC Method Outcomes Using the $IC_{50}$-Based Starting Doses .....10-27

**10.4 The Impact of Accuracy on Animal Savings.....10-28**

**10.5 The Impact of Prevalence on Animal Savings.....10-30**

**10.6 Summary .....10-31**

**11.0 PRACTICAL CONSIDERATIONS .....11-3**

**11.1 Transferability of the 3T3 and NHK NRU Test Methods .....11-3**
11.1.1 Facilities and Major Fixed Equipment .....11-3

11.1.1.1 *Facility Requirements* ..... 11-3
11.1.1.2 *Cell Culture Laboratory* ..... 11-4
11.1.1.3 *Major Equipment* ..... 11-4
11.1.2 Availability of Other Necessary Equipment and Supplies ..... 11-4
11.1.2.1 *General Equipment* ..... 11-4
11.1.2.2 *Cell Culture Materials and Supplies* ..... 11-5
11.1.2.3 *Cell Cultures* ..... 11-5
11.1.3 Problems Specific to the NHK NRU Test Method ..... 11-5

**11.2 3T3 and NHK NRU Test Method Training Considerations ..... 11-6**
11.2.1 Required Training and Expertise ..... 11-6
11.2.1.1 *Specific Training and Expertise Needed* ..... 11-6
11.2.1.2 *General Laboratory Expertise Needed* ..... 11-7
11.2.2 Training Requirements to Demonstrate Proficiency ..... 11-7
11.2.2.1 *Proficiency with GLP-Compliance* ..... 11-8
11.2.3 Personnel Needed to Perform the *In Vitro* NRU Test Methods.... 11-8

**11.3 Cost Considerations ..... 11-8**
11.3.1 3T3 and NHK NRU Test Methods ..... 11-8
11.3.1.1 *Equipment Costs* ..... 11-8
11.3.1.2 *Costs for Cell Cultures and Supplies* ..... 11-8
11.3.1.3 *Commercial Testing* ..... 11-9
11.3.2 Rodent Acute Oral Toxicity Testing ..... 11-11

**11.4 Time Considerations for Performing the 3T3 and NHK NRU Tests .. 11-12**
11.4.1 The 3T3 NRU Test Method ..... 11-12
11.4.2 The NHK NRU Test Method ..... 11-12
11.4.3 Prequalification of NHK Medium ..... 11-12
11.4.4 *In Vivo* Testing ..... 11-12
11.4.5 The Limit Test ..... 11-13

**11.5 Summary ..... 11-14**

**12.0 REFERENCES ..... 12-1**

**13.0 GLOSSARY ..... 13-1**

## APPENDICES

**VOLUME 2 OF 2**

**Appendix A NICEATM/ECVAM Validation Study Management ..... A-1**

**Appendix B Validation Study Test Method Protocols (Phase III) ..... B-1**
B1 Test Method Protocol for the BALB/c 3T3 Neutral Red Uptake (NRU) Cytotoxicity Test ..... B-3
B2 Test Method Protocol for the Normal Human Epidermal Keratinocyte (NHK) Neutral Red Uptake Cytotoxicity Test ..... B-25
B3 Test Method Protocol for Solubility Determination (Phase III) ..... B-47
B4 Test Method Procedure for Prequalification of Normal Human Epidermal Keratinocyte Growth Medium (Phase III) ..... B-59

**Appendix C Validation Study Test Method Protocols (Phases Ia, Ib, and II) ..... C-1**
C1 Test Method Protocol for the BALB/c 3T3 Neutral Red Uptake Cytotoxicity Test (Phase Ia) ..... C-3
C2 Test Method Protocol for the Normal Human Epidermal Keratinocyte (NHK) Neutral Red Uptake Cytotoxicity Test (Phase Ia) ..... C-23
C3 Test Method Protocol for the BALB/c 3T3 Neutral Red Uptake Cytotoxicity Test (Phase Ib) ..... C-41
C4 Test Method Protocol for the Normal Human Epidermal Keratinocyte (NHK) Neutral Red Uptake Cytotoxicity Test (Phase Ib) ..... C-63
C5 Test Method Protocol for the BALB/c 3T3 Neutral Red Uptake Cytotoxicity Test (Phase II) ..... C-85
C6 Test Method Protocol for the Normal Human Epidermal Keratinocyte (NHK) Neutral Red Uptake Cytotoxicity Test (Phase II) ..... C-109

**Appendix D SAS Codes ..... D-1**
D1 SAS Code for ANOVA and Contrasts ..... D-3
D2 SAS Code for Regression Comparisons ..... D-7

**Appendix E Neutral Red Dye Experiments ..... E-1**
E1 Institute for *In Vitro* Sciences (IIVS) Assessment of Protocol Variables in the NICEATM/ECVAM Evaluation of Cytotoxicity Assays ..... E-5
E2 Neutral Red (NR) Dye Experiments – 3T3 Cells – IIVS ..... E-13
E3 Neutral Red (NR) Dye Experiments – NHK Cells – IIVS ..... E-19
E4 Neutral Red (NR) Dye Experiments – 3T3 Cells – ECBC ..... E-25

**Appendix F Reference Substance Information ..... F-1**
F1 NRU Test Information for the 72 Reference Substances ..... F-3
F2 Chemical, Physical, and Biological Information from the Literature for the 72 Reference Substances ..... F-11
F3 Candidate Reference Substances ..... F-27

**Appendix G Statement of Work (SOW) ..... G-1**
G1 A Validation Study For *In Vitro* Basal Cytotoxicity Testing ..... G-3
G2 Procedures for Acquisition, Preparation, Solubility Testing, and Distribution of Test Chemicals for a Validation Study for *In Vitro* Basal Cytotoxicity Testing ..... G-57

**Appendix H Rat and Mouse Oral $LD_{50}$ Database ..... H-1**
H1 Rat and Mouse Oral $LD_{50}$ Database ..... H-3
H2 Evaluation of the Candidate Reference Oral $LD_{50}$ Data ..... H-39

**Appendix I *In Vitro* NRU Data ..... I-1**
I1 3T3 NRU Reference Substance Data ..... I-3
I2 NHK NRU Reference Substance Data ..... I-59
I3 3T3 NRU Positive Control (SLS) Data ..... I-111
I4 NHK NRU Positive Control (SLS) Data ..... I-127

**Appendix J $LD_{50}$ and Toxicity Category Predictions ..... J-1**
J1 3T3 NRU Predictions: RC Millimole Regression ..... J-5
J2 NHK NRU Predictions: RC Millimole Regression ..... J-11
J3 3T3 NRU Predictions: RC Rat-Only Millimole Regression ..... J-17
J4 NHK NRU Predictions: RC Rat-Only Millimole Regression ..... J-21
J5 3T3 NRU Predictions: RC Rat-Only Weight Regression ..... J-25
J6 NHK NRU Predictions: RC Rat-Only Weight Regression ..... J-29
J7 Comparison of Millimole Regression with Weight Regression Regarding Prediction of Toxicity ($LD_{50}$) for Low or High Molecular Weight Chemicals ..... J-34

**Appendix K $IC_{50}$ and $LD_{50}$ Data for Regressions ..... K-1**
K1 $IC_{50}$ and $LD_{50}$ Values Used for Laboratory-Specific Regressions ..... K-3
K2 $IC_{50}$ and $LD_{50}$ Values Used for Combined-Laboratory Regressions ..... K-17
K3 RC $IC_{50}$ and $LD_{50}$ Values for RC Substances with Rat Oral $LD_{50}$ Data ..... K-23
K4 Individual Laboratory $LD_{50}$ Predictions: RC Rat-Only Millimole Regression ..... K-33

**Appendix L Outlier Information ..... L-1**
L1 Outlier Characterization for the 3T3 and NHK NRU Test Methods with the RC Millimole Regression ..... L-3
L2 Discordant Substances for GHS Acute Oral Toxicity Category Predictions Using the 3T3 and NHK NRU Test Methods and RC Rat-Only Regressions ..... L-9
L3 Analysis of Outliers by Halle (1998, 2003) for the RC Millimole Regression ..... L-17

**Appendix M Acute Oral Toxicity Test Guidelines ..... M-1**
M1 OECD UDP Test Guideline ..... M-3
M2 EPA UDP Test Guideline ..... M-31
M3 OECD ATC Method Test Guideline ..... M-71
M4 OECD FDP Test Guideline ..... M-87
M5 OECD Guidance on Acute Oral Toxicity Testing ..... M-103

**Appendix N UDP/ATC Simulation Modeling Results ..... N-1**
N1 UDP Simulation Results Using Starting Doses One Default Dose Lower than the $LD_{50}$ Predicted by the 3T3 and NHK NRU $IC_{50}$ and the RC Rat-Only Millimole Regression – 5000 mg/kg Upper Limit Dose ..... N-3

N2 UDP Simulation Results Using Starting Doses One Default Dose Lower than the $LD_{50}$ Predicted by the 3T3 and NHK NRU $IC_{50}$ and the RC Rat-Only Weight Regression – 5000 mg/kg Upper Limit Dose ..... N-13
N3 ATC Simulation Results Starting at the Next Fixed Dose Below the $LD_{50}$ Predicted by the 3T3 and NHK NRU $IC_{50}$ and the RC Rat-Only Millimole Regression - 2000 mg/kg Upper Limit Dose ..... N-23
N4 ATC Simulation Results Starting at the Next Fixed Dose Below the $LD_{50}$ Predicted by the 3T3 and NHK $IC_{50}$ and the RC Rat-Only Weight Regression – 2000 mg/kg Upper Limit Dose ..... N-33

**Appendix O *Federal Register* Notices ..... O-1**
O1 **70FR14473 -** Request for Nominations for an Independent Peer Review Panel To Evaluate *In Vitro* Testing Methods for Estimating Acute Oral Systemic Toxicity and Request for *In Vivo* and *In Vitro* Data ..... O-3
O2 **69FR61504 -** Availability of Updated Standardized *In Vitro* Cytotoxicity Test Method Protocols for Estimating Acute Oral Systemic Toxicity; Request for Existing *In Vivo* and *In Vitro* Acute Toxicity Data ..... O-5
O3 **69FR11448 -** Notice of the Availability of Agency Responses to ICCVAM Test Recommendations for the Revised Up-and-Down Procedure for Determining Acute Oral Toxicity and *In Vitro* Methods for Assessing Acute Systemic Toxicity ..... O-7
O4 **66FR49686 -** Report of the International Workshop on *In Vitro* Methods for Assessing Acute Systemic Toxicity; Guidance Document on Using *In Vitro* Data to Estimate *In Vivo* Starting Doses for Acute Toxicity: Notice of Availability and Request for Public Comment ..... O-9
O5 **65FR57203 -** Notice of an International Workshop on *In Vitro* Methods for Assessing Acute Systemic Toxicity, co-sponsored by NIEHS, NTP and the U.S. Environmental Protection Agency (EPA): Workshop Agenda and Registration Information ..... O-11
O6 **65FR37400 -** Notice of an International Workshop on *In Vitro* Methods for Assessing Acute Systemic Toxicity, co-sponsored by NIEHS, NTP and the U.S. Environmental Protection Agency (EPA): Request for Data and Suggested Expert Scientists ..... O-15

**Appendix P *In Vitro* Cytotoxicity Test Methods and the High Production Volume (HPV) Challenge Program ..... P-1**
P1 Supplemental Acute Toxicity Protocol ..... P-3
P2 Office of Pollution Prevention and Toxics (OPPT) Letters to Manufacturers/Importers ..... P-9

**Appendix Q Additional UDP Simulation Modeling Results ..... Q-1**
Q1 UDP Simulation Results for the RC Rat-Only Millimole Regression Starting at the $LD_{50}$ Predicted by the 3T3 and NHK NRU $IC_{50}$ – 5000 mg/kg Upper Limit Dose ..... Q-3
Q2 UDP Simulation Results for the RC Rat-Only Weight Regression Starting at the $LD_{50}$ Predicted by the 3T3 and NHK NRU $IC_{50}$ $LD_{50}$ – 5000 mg/kg Upper Limit Dose ..... Q-13

# LIST OF FIGURES


Figure 1-1 RC Millimole Regression for *In Vitro* Cytotoxicity ($IC_{50x}$) and Rat and Mouse Acute Oral $LD_{50}$ Values for 347 Chemicals ..... 1-9
Figure 1-2 NICEATM/ECVAM Validation Study Phases ..... 1-13
Figure 2-1 Major Steps in the Performance of the NRU Test Methods ..... 2-7
Figure 2-2 3T3 NRU OD for SLS as a Function of NR Concentration and Duration..... 2-26
Figure 2-3 SLS $IC_{50}$ Values for Each NR Concentration and Incubation Duration (3T3 NRU) ..... 2-27
Figure 2-4 Representative Concentration-Response for 2-Propanol in a 3T3 NRU Range Finder Test..... 2-30
Figure 2-5 Representative Concentration-Response for Aminopterin in a NHK NRU Range Finder Test..... 2-31
Figure 2-6 Representative Concentration-Response for Aminopterin in a NHK NRU Definitive Test ..... 2-32
Figure 2-7 Flow Chart for Determination of Reference Substance Solubility in Medium, DMSO, or ETOH..... 2-38
Figure 3-1 The Fifty-Eight (58) Selected RC Reference Substances on the RC Millimole Regression..... 3-27
Figure 4-1 Correlation of $LD_{50}$ Values With the Reference $LD_{50}$ Values for the 58 RC Chemicals ..... 4-14
Figure 5-1 Reference Substance $IC_{50}$ Results for the 3T3 NRU Test Method by Laboratory ..... 5-24
Figure 5-2 Reference Substance $IC_{50}$ Results for the NHK NRU Test Method by Laboratory ..... 5-25
Figure 5-3 RC $IC_{50}$ Values vs 3T3 NRU $IC_{50}$ Values for 56 Substances in Common..... 5-37
Figure 5-4 RC $IC_{50}$ Values vs NHK NRU $IC_{50}$ Values for 57 Substances in Common ..... 5-38
Figure 6-1 Combined-Laboratory 3T3 and NHK NRU Regressions ..... 6-7
Figure 6-2 Regression for 47 RC Substances Using RC Data ..... 6-8
Figure 6-3 Regression for 47 RC Substances with the 3T3 and NHK Regressions..... 6-9
Figure 6-4 RC Rat-Only Millimole Regression (a) and RC Rat-Only Weight Regression (b)..... 6-19
Figure 6-5 Correlation of Dose-Mortality Slope to Hill Function Slope..... 6-30
Figure 6-6 *In Vitro – In Vivo* Regressions for Phases Ib and II for ECBC ..... 6-37
Figure 6-7 *In Vitro – In Vivo* Regressions for Phases Ib and II for FAL..... 6-38
Figure 6-8 *In Vitro – In Vivo* Regressions for Phases Ib and II for IIVS..... 6-39
Figure 7-1 Mean Laboratory and Laboratory-Specific 3T3 and NHK NRU Regressions..... 7-7
Figure 7-2 Frequency of Maximum:Minimum 3T3 NRU $IC_{50}$ Ratios ..... 7-39
Figure 7-3 Frequency of Maximum:Minimum NHK NRU $IC_{50}$ Ratios..... 7-40
Figure 7-4 Comparison of Maximum:Minimum NRU $IC_{50}$ Ratios to Maximum: Minimum $LD_{50}$ Ratios ..... 7-41
Figure 7-5 SLS $IC_{50}$ for Each Laboratory and Study Phase..... 7-45

# LIST OF TABLES


Table ES-1 Datasets Used for Validation Study Analyses ..... xxxvi
Table 1-1 Summary of Current U.S. Legislation for Using Acute Toxicity Data for Product Labeling ..... 1-14
Table 1-2 Regulatory Classification Systems for Acute Oral Toxicity ..... 1-15
Table 2-1 Measured VC $OD_{540}$ Values and Targets ..... 2-17
Table 2-2 Refeeding/No Refeeding Data for the NHK NRU Test Method ..... 2-24
Table 2-3 Error Rates in Phase Ib by Laboratory and Test ..... 2-28
Table 2-4 Cell Seeding Densities ..... 2-37
Table 2-5 Comparison of Concentrations Tested in the Various Solubility Protocols ..... 2-39
Table 3-1 GHS Classification Scheme for Acute Oral Toxicity ..... 3-3
Table 3-2 Reference Substances Used in the 3T3 and NHK NRU Test Methods Validation Study - Sorted by Toxicity ..... 3-7
Table 3-3 Distribution of Candidate Substances and Reference Substances by Source and Toxicity Category ..... 3-26
Table 3-4 Selected Substances: Distribution of RC Chemicals and RC Outliers by Toxicity Category ..... 3-26
Table 3-5 Distribution of Chemical Class for the 72 Reference Substances by Toxicity Category ..... 3-29
Table 3-6 Distribution of Product/Use Class for the 72 Reference Substances by Toxicity Category ..... 3-31
Table 3-7 Reference Substances Metabolized to Active Metabolites ..... 3-32
Table 3-8 Reference Substances Tested in Phases Ib and II ..... 3-33
Table 4-1 Internet-Accessible Databases Searched for $LD_{50}$ Information ..... 4-3
Table 4-2 Rodent Acute Oral Reference $LD_{50}$ Values Listed by GHS Category ..... 4-9
Table 4-3 GHS Category Matches for the Rodent Acute Oral $LD_{50}$ Initial and Reference Values ..... 4-12
Table 4-4 Maximum:Minimum $LD_{50}$ Ratios by GHS Toxicity Category ..... 4-13
Table 5-1 Validation Study Timetable ..... 5-4
Table 5-2 Reference Substances Affected by the Stopping Rule ..... 5-10
Table 5-3 Positive Control (PC) $IC_{50}$ Results by Study Phase ..... 5-11
Table 5-4 3T3 NRU Test Method $IC_{50}$ and Hill Slope Data by Laboratory ..... 5-14
Table 5-5 NHK NRU Test Method $IC_{50}$ and Hill Slope Data by Laboratory ..... 5-19
Table 5-6 Key to Validation Study Reference Substances ..... 5-26
Table 5-7 Datasets Used for Validation Study Analyses ..... 5-32
Table 5-8 Comparison of 3T3 and NHK NRU $IC_{50}$ Geometric Means ..... 5-33
Table 5-9 Frequency of 3T3:NHK $IC_{50}$ Ratios for Reference Substances ..... 5-36
Table 5-10 Solubility Test Results (mg/mL) ..... 5-39
Table 5-11 Reference Substances with Precipitate (PPT) and Volatility Issues ..... 5-43
Table 6-1 Datasets Used for Accuracy Analyses ..... 6-4
Table 6-2 Linear Regression Analyses of the 3T3 and NHK NRU and Rat Acute Oral $LD_{50}$ Test Results ..... 6-6
Table 6-3 Outlier Substances for the RC and the 3T3 and NHK NRU Methods When the RC Millimole Regression is Used ..... 6-10

Table 6-4 Substances With Mechanisms of Toxicity Not Expected to Be Active in the 3T3 or NHK Cells in Culture ..... 6-15
Table 6-5 Linear Regression Analyses to Improve the Prediction of Rodent Acute Oral $LD_{50}$ Values from *In Vitro* NRU $IC_{50}$ Using the RC Database ..... 6-17
Table 6-6 Prediction of GHS Acute Oral Toxicity Category by the RC $IC_{50}$ Values and the RC Millimole Regression ..... 6-21
Table 6-7 Prediction of GHS Acute Oral Toxicity Category by the 3T3 and NHK NRU Test Methods and the RC Rat-Only Millimole Regression ..... 6-23
Table 6-8 Prediction of GHS Acute Oral Toxicity Category by the 3T3 and NHK NRU Test Methods and the RC Rat-Only Weight Regression ..... 6-26
Table 6-9 Comparison of Regressions and *In Vitro* NRU Test Methods for Their Performance in Predicting GHS Acute Oral Toxicity Categories ..... 6-28
Table 6-10 Reference Substances with Dose-Mortality and NRU Hill Slopes ..... 6-29
Table 6-11 Over- and Under- Prediction of Toxicity for Low and High Molecular Weight Substances Using RC Rat-Only Weight and Millimole Regressions ..... 6-33
Table 6-12 Linear Regressions for 11 Substances Tested in Phases Ib and II ..... 6-36
Table 7-1 Reference Substances Excluded from Reproducibility Analyses Because of Insufficient Cytotoxicity ..... 7-4
Table 7-2 Number of Reference Substances Tested vs Number of Reference Substances Yielding $IC_{50}$ Values from Each Laboratory, by GHS Acute Oral Toxicity Category ..... 7-4
Table 7-3 Interlaboratory Reproducibility of the $IC_{50}$ Values from the 3T3 NRU Test Method ..... 7-8
Table 7-4 Reference Substances with Significant ANOVA Differences Among Laboratories for the 3T3 NRU Test Method ..... 7-20
Table 7-5 Reproducibility of the $IC_{50}$ Values from the NHK NRU Test Method ..... 7-22
Table 7-6 Reference Substances with Significant ANOVA Differences Among Laboratories for the NHK NRU Test Method ..... 7-34
Table 7-7 Summary of CV Results for the 3T3 and NHK NRU Test Methods ..... 7-34
Table 7-8 Intralaboratory CV by Chemical Characteristics for the 3T3 and NHK NRU Test Methods ..... 7-36
Table 7-9 Interlaboratory 3T3 and NHK NRU Test Method CV Values Sorted by Chemical Characteristics ..... 7-38
Table 7-10 CV Values for 3T3 and NHK NRU Test Method $IC_{50}$ Values and Normalized $IC_{50}$ Values ..... 7-43
Table 7-11 ANOVA Results for the SLS $IC_{50}$ Values in the 3T3 NRU Test Method ..... 7-47
Table 7-12 Linear Regression Analysis of SLS $IC_{50}$ Values Over Time ..... 7-48
Table 7-13 ANOVA Results for the SLS $IC_{50}$ Values in the NHK NRU Test Method ..... 7-49
Table 7-14 Solvent Determinations by Laboratory ..... 7-51
Table 8-1 SMT-Recommended Documentation for FAL ..... 8-4
Table 8-2 Phase III Error Rates in the Transfer of Data to the EXCEL® Template ..... 8-10

Table 8-3 Definitive Test and Positive Control (PC) Test Failure Rates in Phase III....8-10
Table 8-4 Combined Definitive and Positive Control (PC) Test Success Rates for the 3T3 and NHK Methods in Phase III....8-11
Table 8-5 CV Values for Definitive Tests....8-11
Table 8-6 GHS Acute Oral Toxicity Category Predictions by Laboratory....8-13
Table 9-1 Rat Acute Oral $LD_{50}$ Ranges for Test Substances Used in Previous *In Vitro* NRU Cytotoxicity Studies and the NICEATM/ECVAM Study....9-4
Table 9-2 Chemical Classes Represented by the Substances Used in Published Studies for Correlation of *In Vitro* NRU Cytotoxicity with Rodent Acute Lethality....9-4
Table 9-3 EU Classes of Acute Oral Toxicity....9-8
Table 9-4 Correct Identification of *In Vivo* Phototoxicants by the NHK NRU Phototoxicity Assay....9-18
Table 10-1 Change in Animal Use with Dose-Mortality Slope for the UDP....10-8
Table 10-2 Mean Animal Use in the UDP Using Starting Doses Based on the 3T3 and NHK NRU Test Methods with the Different Regressions....10-10
Table 10-3 Animal Use for the UDP by GHS Acute Oral Toxicity Category Using Starting Doses Based on the 3T3 and NHK NRU Test Methods with the RC Rat-Only Millimole Regression....10-12
Table 10-4 Animal Use for the UDP by GHS Acute Oral Toxicity Category Using Starting Doses Based on the 3T3 and NHK NRU Test Methods with the RC Rat-Only Weight Regression....10-14
Table 10-5 Animal Deaths in the UDP Using Starting Doses Based on the 3T3 and NHK NRU Test Methods....10-15
Table 10-6 Change in Animal Use with Dose-Mortality Slope in the ATC Method....10-19
Table 10-7 Animal Use for the ATC Method Using Starting Doses Based on the 3T3 and NHK NRU Test Methods with the Different Regressions....10-21
Table 10-8 Animal Savings for the ATC Method by GHS Acute Oral Toxicity Category Using Starting Doses Based on the 3T3 and NHK NRU Test Methods with the RC Rat-Only Millimole Regression....10-23
Table 10-9 Animal Savings for the ATC Method by GHS Acute Oral Toxicity Category Using Starting Doses Based on the 3T3 and NHK NRU Test Methods with the RC Rat-Only Weight Regression....10-25
Table 10-10 Animal Deaths for the ATC Method Using Starting Doses Based on the 3T3 and NHK NRU Test Methods....10-27
Table 11-1 Costs for Major Laboratory Equipment....11-9
Table 11-2 Costs for Cell Culture Materials and Commercial Laboratory *In Vitro* Cytotoxicity Testing....11-10
Table 11-3 Commercial Prices for Conducting *In Vivo* Acute Rat Toxicity Testing....11-11
Table 11-4 Comparison of Time Needed for *In Vitro* and *In Vivo* Testing....11-14

## LIST OF ACRONYMS AND ABBREVIATIONS

| | |
|---|---|
| A-CUTE-TOX | A-Cute-Tox Project (EU Research & Development Integrated Project) |
| ADME | Absorption, distribution, metabolism, and elimination |
| ANOVA | Analysis of variance |
| ASTDR | Agency for Toxic Substances and Disease Registry |
| ASTM | American Society for Testing and Materials |
| ATC | Acute Toxic Class method |
| ATCC | American Type Culture Collection |
| ATWG | Acute Toxicity Working Group |
| BBB | Blood:brain barrier |
| BPE | Bovine pituitary extract |
| BRD | Background Review Document |
| $^{o}$C | Degrees Celsius |
| CAS | Chemical Abstracts Service |
| CASRN | Chemical Abstracts Service Registry Number |
| CCOHS | Canadian Centre for Occupational Health and Safety (CCOHS) |
| CDER | U.S. FDA Center for Drug Evaluation and Research |
| CESARS | Chemical Evaluation Search and Retrieval System |
| CFU | Colony forming units |
| CHRIS | Chemical Hazard Response |
| CI | Confidence interval |
| CICADS | Concise International Chemical Assessment Documents |
| CIS | ILO Occupational Safety and Health Information Centre |
| CNS | Central nervous system |
| COLIPA | The European Cosmetic Toiletry and Perfumery Association |
| CPSC | U.S. Consumer Product Safety Commission |
| CSF | Colony stimulating factor |
| CTFA | Cosmetic, Toiletries and Fragrance Association |
| CV | Coefficient of variation |
| DART®/ETIC | Developmental and Reproductive Toxicology/Environmental Teratology Information Center |
| DEA | U.S. Drug Enforcement Administration |
| DHHS | U.S. Department of Health and Human Services |
| DIMDI | Deutsches Institut fur Medizinische Dokumentation und Information (The German Institute for Medical Documentation and Information) |
| DNA | Deoxyribose nucleic acid |
| DMEM | Dulbecco's Modification of Eagle's Medium |
| DMSO | Dimethyl sulfoxide |
| D-PBS | Dulbecco's phosphate buffered saline |
| DOD | U.S. Department of Defense |
| DOT | U.S. Department of Transportation |
| EC | European Commission |
| $EC_{50}$ | Concentration of a substance that produces 50% of the maximum possible response for that substance |

| | |
|---|---|
| ECBC | U.S. Army Edgewood Chemical Biological Center |
| ECETOC | European Centre for Ecotoxicology and Toxicology of Chemicals |
| EC/HO | European Commission/British Home Office |
| ECVAM | European Centre for the Validation of Alternative Methods |
| EDIT | Evaluation-guided development of new *in vitro* tests |
| EHC | Environmental Health Criteria |
| EHS | EPA's Extremely Hazardous Substance list |
| EPA | U.S. Environmental Protection Agency |
| ERG | Emergency Response Guidebook |
| ETOH | Ethanol (Ethyl alcohol) |
| EU | European Union |
| EXTONET | The Extension Toxicology Network |
| FAL | FRAME Alternatives Laboratory |
| FAO | UN Food and Agriculture Organization |
| FB1 | Fumonisin B1 |
| FDA | U.S. Food and Drug Administration |
| FDP | Fixed Dose Procedure |
| FIFRA | U.S. Federal Insecticide, Fungicide, and Rodenticide Act |
| FR | Federal Register |
| FRAME | Fund for the Replacement of Animals in Medical Experiments |
| GABA | Gamma amino butyric acid |
| GCCP | Good cell culture practices |
| GHS | Globally Harmonized System (of Classification and Labeling of Chemicals) |
| GLP | Good Laboratory Practices |
| gm | Grams |
| HBSS | Hanks' balanced salt solution |
| HPV | High Production Volume |
| hr | Hour(s) |
| HSDB | Hazardous Substances Data Bank |
| HSG | Health and Safety Guides |
| HTD | Highest tolerated dose |
| IARC | International Agency for Research on Cancer |
| $IC_{20}$ | Concentration producing 20% inhibition of the endpoint measured |
| $IC_{50}$ | Concentration producing 50% inhibition of the endpoint measured |
| $IC_{80}$ | Concentration producing 80% inhibition of the endpoint measured |
| ICCVAM | Interagency Coordinating Committee for the Validation of Alternative Methods |
| ICSC | International Chemical Safety Cards |
| ID | Insufficient data |
| $ID_{50}$ | Index of cytotoxicity; dose producing a 50% reduction in protein value |
| IIVS | Institute for *In Vitro* Sciences |
| ILO | International Labour Organisation |
| i.m. | Intramuscular |
| INVITOXX | *In Vitro* Techniques in Toxicology (ERGATT FRAME ECVAM Data bank) |

| | |
|---|---|
| IOM | Institute of Medicine |
| i.p. | Intraperitoneal |
| IPCS | International Programme on Chemical Safety |
| IRAG | Interagency Regulatory Alternatives Group |
| IRPTC | International Register of Potentially Toxic Chemicals |
| ISO | International Standards Organization |
| IUCLID | International Uniform Chemical Information Database |
| i.v. | Intravenous |
| JECFA | Joint Expert Committee on Food Additives |
| JMPR | Joint Meeting on Pesticide Residues |
| KBM® | Keratinocyte basal medium |
| kg | Kilogram |
| $K_{ow}$ | Octanol-water partition coefficient |
| L | Liter |
| LC | Lethal blood concentration |
| $LD_{50}$ | Dose that produces lethality in 50% of test animals |
| LDH | Lactate dehydrogenase |
| MAS | Maximum average Draize score |
| MEIC | Multicentre Evaluation of *In Vitro* Cytotoxicity |
| MeSH® | Medical Subject Heading |
| µL | Microliters |
| µm | Micrometers |
| µM | Micromoles |
| mg | Milligram |
| MIT | Metabolic inhibition test |
| mL | Milliliter |
| mM | Millimolar |
| MMAS | Modified maximum average score |
| mmol | Millimoles |
| MPE | Mean photo effect |
| MSDS | Material Safety Data Sheets |
| MTT | 3-(4,5-Dimethylthiazol-2-yl)-2,5-diphenyl tetrazolium bromide |
| N | Number (of substances) |
| NA | Not applicable |
| NADH | Nicotine adenine dinucleotide (reduced) |
| NC | Not calculated |
| NCS | Newborn calf serum |
| NCTR | U.S. FDA National Center for Toxicological Research |
| n.d. | Not detectable |
| NHK | Normal human epidermal keratinocytes |
| NICEATM | National Toxicology Program Center for the Evaluation of Alternative Toxicological Methods |
| NIEHS | U.S. National Institute of Environmental Health Sciences |
| NIH | U.S. National Institutes of Health |
| NIOSH | U.S. National Institute for Occupational Safety and Health |
| NLM | National Library of Medicine |

| | |
|---|---|
| NR | Neutral red |
| NRU | Neutral red uptake |
| NTP | U.S. National Toxicology Program |
| OAT | Organic anionic transporters |
| OD | Optical density |
| $OD_{540}$ | Optical density (absorbance) at a wavelength of 540 nm |
| OECD | Organisation for Economic Co-operation and Development |
| OHM/TADS | EPA Oil and Hazardous Materials/Technical Assistance Data System |
| OPP | U.S. EPA Office of Pesticide Programs |
| OPPTS | EPA Office of Prevention, Pesticides and Toxic Substances |
| ORD | U.S. EPA Office of Research and Development |
| OSHA | U.S. Occupational Safety and Health Administration |
| OTA | Ochratoxin A |
| PBS | Phosphate buffered saline |
| PC | Positive control |
| PDS | Pesticide Data Sheets |
| pg | Picogram |
| PG | Packing group |
| PIF | Photoinhibition factor |
| PIMS | Poisons Information Monographs |
| pK | Acid/base dissociation constant |
| PLS | Partial Least Squares (analysis) |
| PPIS | EPA Pesticide Product Information System |
| PPT | Precipitate |
| QA | Quality assurance |
| QC | Quality control |
| $R^2$ | Coefficient of determination |
| $r_s$ | Spearman correlation coefficient |
| RC | Registry of Cytotoxicity |
| REACH | Registration, evaluation, authorisation and restriction of chemicals |
| RTECS® | Registry of Toxic Effects of Chemical Substances |
| RTK NET | The Right-to-Know Network |
| SD | Standard deviation |
| SIDS | OECD Screening Information Data Sets |
| SIS | Scientific Information Service |
| SLS | Sodium lauryl sulfate |
| SMT | Study management team |
| SOP | Standard operating procedure |
| 3T3 | BALB/c mouse fibroblasts, clone A31 (ATCC # CCL-163) |
| TESS | Toxic Exposure Surveillance System |
| TG | Test guideline |
| TRI | U.S. EPA Toxics Release Inventory |
| TSCA | Toxic Substances Control Act |
| UDP | Up-and-Down Procedure |
| UN | United Nations |

| | |
|---|---|
| UNEP | United Nations Environment Programme |
| USP | U.S. Pharmacopoeia |
| UV | Ultraviolet (light) |
| VC | Vehicle control |
| WHO | World Health Organization |
| XTT | 2,3-Bis(2-methoxy-4-nitro-5-sulfophenyl)-2H-tetrazolium-5-carboxanilide |
| ZEBET | Zentralstelle zur Erfassung und Bewertung von Ersatz- und Ergänzungsmethoden zum Tierversuch (German Center for Documentation and Evaluation of Alternative Methods to Animal Experiments) |

# ACKNOWLEDGMENTS

*The following individuals are acknowledged for their contributions to the in vitro acute toxicity test method review process.*

## Interagency Coordinating Committee on the Validation of Alternative Methods (ICCVAM) Acute Toxicity Working Group (ATWG)

**Consumer Product Safety Commission (CPSC)**

Kailash Gupta, D.V.M., Ph.D.
Cassandra Prioleau, Ph.D.
Marilyn Wind, Ph.D. (ATWG Chair, ICCVAM Vice Chair)

**Department of Energy (DOE)**

Po-Yung Lu, Ph.D.

**Environmental Protection Agency (EPA)**

Karen Hamernik, Ph.D.
Masih Hashim, Ph.D.
Marianne Lewis
Elizabeth Margosches, Ph.D.
Deborah McCall
John Redden, Ph.D.
Amy Rispin, Ph.D.

**Food and Drug Administration (FDA)**

Leonard Schechtman, Ph.D. (ICCVAM Chair)
Kenneth Hastings, Ph.D.
Abigail Jacobs, Ph.D.
David Morse, Ph.D.
Thomas Umbreit, Ph.D.

**National Institute for Occupational Safety & Health (NIOSH)**

Steven Reynolds, Ph.D.

**National Institute of Environmental Health Sciences (NIEHS)**

Rajendra Chhabra, Ph.D., D.A.B.T.
William Stokes, D.V.M., D.A.C.L.A.M. (ICCVAM Executive Director; NICEATM Director)
Raymond Tice, Ph.D. (NICEATM Deputy Director)

**European Centre for the Validation of Alternative Methods (ECVAM) Liaisons**

Silvia Casati, Ph.D.
Pilar Prieto, Ph.D.

# National Toxicology Program (NTP) Interagency Center for the Evaluation of Alternative Toxicological Methods (NICEATM)

**Dave Allen, Ph.D.**
ILS, Inc.

**Bradley Blackard, M.S.P.H.**
ILS, Inc.

**Sue Brenzel**
ILS, Inc.

**Thomas Burns, M.S.**
ILS, Inc.

**Patricia Ceger, M.S.**
**ILS, Inc.**

**Jeffery Charles, Ph.D., M.B.A., D.A.B.T.**
ILS, Inc.

**Neepa Choksi, Ph.D.**
ILS, Inc.

**Frank Deal, M.S.**
**ILS, Inc.**

**Linda Litchfield**
ILS, Inc.

**Deborah McCarley**
NIEHS

**Michael Paris**
ILS, Inc.

**William Stokes, D.V.M., D.A.C.L.A.M. (Director)**
NIEHS

**Judy Strickland, Ph.D., D.A.B.T.**
ILS, Inc.

**Raymond Tice, Ph.D. (Deputy Director)**
NIEHS

**Jim Truax, M.A.**
ILS, Inc.

# Participants in the *In Vitro* Cytotoxicity Validation Study

*NICEATM gratefully acknowledges the generous contributions of the individuals who directly participated in the NICEATM/ECVAM Validation Study. Their time and efforts are greatly appreciated.*

**BioReliance Corp.**
**(Chemical Distribution)**
Martin Wenk, Ph.D. – Principal Investigator

**Institute for *In Vitro* Sciences (IIVS)**
**(Lead Laboratory – Protocols)**
Hans Raabe, M.S. – Study Director
Greg Mun – Laboratory Manager
Angela Sizemore – Research Technician
Gregory O. Moyer – Research Technician
John Harbell, Ph.D. – Scientific Director

**U.S. Army Edgewood Chemical Biological Center (ECBC)**
**(Testing Laboratory)**
Cheng Cao, Ph.D. – Study Director
Janna Madren-Whalley – Research Technician
Chundakkadu Krishna, Ph.D. – Research Technician
James J. Valdes, Ph.D. – Scientific Advisor

**FRAME Alternatives Laboratory (FAL)**
**University of Nottingham, UK**
**(Lead Laboratory – Software)**
Richard Clothier, Ph.D. – Study Director
Nicola Bourne – Research Technician
Monika Owen – Research Technician
Rachel Budworth – Research Technician

**Constella Group (Statistical Analyses)**
Patrick Crockett, Ph.D.
Eric Harvey, Ph.D.
Wendell Jones, Ph.D.
Robert Lee, M.S.
Jessica L. Matthews, M.S.
Michael Riggs, Ph.D.
Janine Wilcox
Nicole Williams

**Statistical Consultant**
Joseph Haseman, Ph.D.

**NIEHS**
Grace Kissling, Ph.D. – Contract Project Officer
Molly Vallant - Contract Project Officer

**Study Management Team (SMT)**
NICEATM
William Stokes, D.V.M., D.A.C.L.A.M. (NIEHS) – Director, NICEATM
Raymond Tice, Ph.D. (NIEHS) – Deputy Director, NICEATM – Advisor
Judy Strickland, Ph.D., D.A.B.T. (ILS, Inc.) – Project Coordinator
Michael Paris (ILS, Inc.) – Assistant Project Coordinator
Jeffrey Charles, Ph.D., D.A.B.T. (ILS, Inc.) – Advisor

ECVAM
Thomas Hartung, Ph.D., M.D. – Head of Unit from 2002
Silvia Casati, Ph.D. – Task Leader
Michael Balls, D. Phil.– Head of Unit until June 2002

***[This Page Intentionally Left Blank]***

# Appendix A

## NICEATM/ECVAM Validation Study Management

***[This Page Intentionally Left Blank]***

## NICEATM/ECVAM Validation Study Management

NICEATM and ECVAM staff managed the study as shown in **Figure A-1**. The NICEATM-ECVAM Study Management Team (SMT), in consultation with the Project Design and Evaluation Team and other advisors shown in **Figure A-1**, designed the study, selected the reference substances (see **Section 3**), and selected the laboratories that would purchase and distribute chemicals and perform solubility and cytotoxicity testing. BioReliance Corporation (Rockville, MD) purchased the reference substances, tested the solubility, and distributed the coded reference substances to the laboratories that performed the cytotoxicity testing. The Institute for *In Vitro* Sciences (IIVS; Gaithersburg, MD), U.S. Army Edgewood Chemical Biological Center (ECBC; Edgewood, MD), and Fund for the Replacement of Animals in Medical Experiments (FRAME) Alternatives Laboratory, University of Nottingham, Queen's Medical Center (FAL; Nottingham, UK) were the participating laboratories that performed the solubility and cytotoxicity testing.

## Figure A-1 Study Management Chart

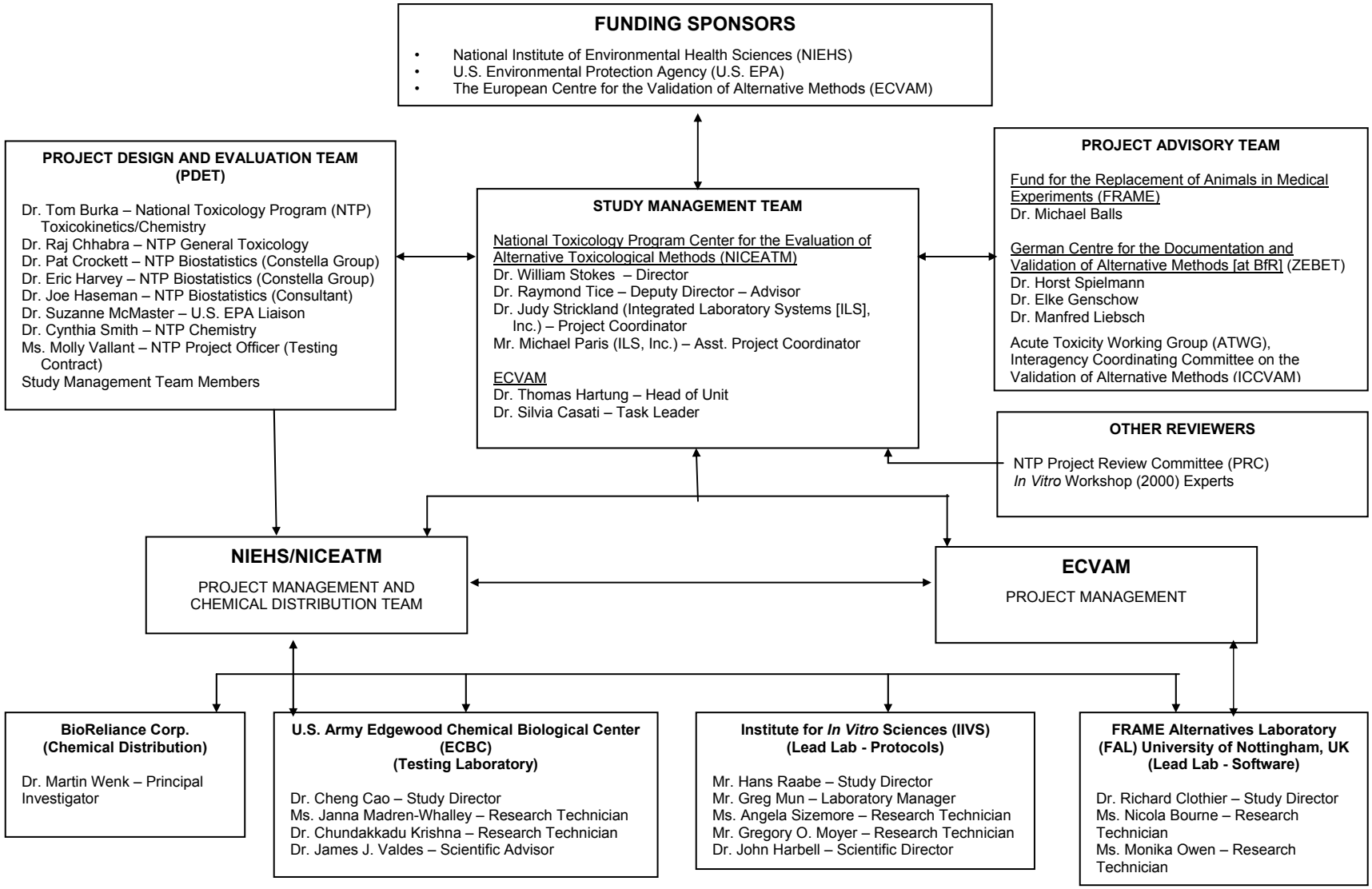

# Appendix B

## Validation Study Test Method Protocols
## (Phase III)

**B1 Test Method Protocol for the BALB/c 3T3 Neutral Red Uptake (NRU) Cytotoxicity Test ..... B-3**

**B2 Test Method Protocol for the Normal Human Epidermal Keratinocyte (NHK) Neutral Red Uptake (NRU) Cytotoxicity Test..... B-25**

**B3 Test Method Protocol for Solubility Determination (Phase III)... B-47**

**B4 Test Method Procedure for Prequalification of Normal Human Epidermal Keratinocyte Growth Medium (Phase III)..... B-59**

***[This Page Intentionally Left Blank]***

# Appendix B1

## Test Method Protocol for the BALB/c 3T3 Neutral Red Uptake (NRU) Cytotoxicity Test

***[This Page Intentionally Left Blank]***

# TEST METHOD PROTOCOL
# for the BALB/c 3T3 Neutral Red Uptake Cytotoxicity Test

**A Test for Basal Cytotoxicity for an *In Vitro* Validation Study**
**Phase III**

**November 4, 2003**

**Prepared by**

**The National Toxicology Program (NTP) Interagency Center for the Evaluation of Alternative Toxicological Methods (NICEATM)**

**Based on Standard Operating Procedure Recommendations from an International Workshop Organized by the Interagency Coordinating Committee on the Validation of Alternative Methods (ICCVAM)**

**National Institute of Environmental Health Sciences (NIEHS)**
**National Institutes of Health (NIH)**
**U.S. Public Health Service**
**Department of Health and Human Services**

# TEST METHOD PROTOCOL

## The BALB/c 3T3 Neutral Red Uptake Cytotoxicity Test
## A Test for Basal Cytotoxicity
## Phase III

### I. PURPOSE

The purpose of this study is to evaluate the cytotoxicity of test chemicals using the BALB/c 3T3 Neutral Red Uptake (NRU) cytotoxicity test. The data will be used to evaluate the intra- and inter-laboratory reproducibility of the assay and effectiveness of the cytotoxicity assay to predict the starting doses for rodent acute oral systemic toxicity assays. This test method protocol outlines the procedures for performing the cytotoxicity test and supports the *in vitro* validation study organized by NICEATM and the European Centre for the Validation of Alternative Methods (ECVAM) and sponsored by NIEHS, U.S. Environmental Protection Agency, and ECVAM. This test method protocol applies to all personnel involved with performing the cytotoxicity assay.

#### A. BALB/c 3T3 Neutral Red Uptake Cytotoxicity Test

The 3T3 NRU test will be performed to analyze the *in vitro* toxicity of 60 blinded/coded test chemicals. This test will be used to determine $IC_{20}$, $IC_{50}$, and $IC_{80}$ values for the predetermined set of test chemicals of varying toxicities.

### II. SPONSOR

**A.** Name: National Institute of Environmental Health Sciences (NIEHS); The National Toxicology Program (NTP) Interagency Center for the Evaluation of Alternative Toxicological Methods (NICEATM)

**B.** Address: P.O. Box 12233
Research Triangle Park, NC 27709

**C.** Representative: *Named Representative*

### III. IDENTIFICATION OF TEST AND CONTROL SUBSTANCES

**A.** Test Chemicals: *Blinded Chemicals (60)*

**B.** Controls:

| | |
|---|---|
| Positive: | Sodium Lauryl Sulfate |
| Vehicle (Negative): | Assay medium (DMEM containing 5% NBCS, 4 mM L-Glutamine, 100 IU/mL Penicillin, 100 µg/mL Streptomycin) |
| Solvent: | Assay medium, DMSO, or ethanol directed by the Study Management Team, for preparation of test chemicals |

## IV. TESTING FACILITY AND KEY PERSONNEL

### A. Facility Information

1) Name:
2) Address:
3) Study Director:
4) Laboratory Technician(s):
5) Scientific Advisor:
6) Quality Assurance Director:
7) Safety Manager:
8) Facility Management:

### B. Test Schedule

1) Proposed Experimental Initiation Date:
2) Proposed Experimental Completion Date:
3) Proposed Report Date:

## V. TEST SYSTEM

The NRU cytotoxicity assay procedure is a cell survival/viability chemosensitivity assay based on the ability of viable cells to incorporate and bind neutral red (NR), a supravital dye. NR is a weak cationic dye that readily penetrates cell membranes by non-ionic diffusion and accumulates intracellularly in lysosomes. Alterations of the cell surface or the sensitive lysosomal membrane lead to lysosomal fragility and other changes that gradually become irreversible. Such changes brought about by the action of xenobiotics result in a decreased uptake and binding of NR. It is thus possible to distinguish between viable, damaged, or dead cells, which is the basis of this assay.

Healthy mammalian cells, when maintained in culture, continuously divide and multiply over time. A toxic chemical, regardless of site or mechanism of action, will interfere with this process and result in a reduction of the growth rate as reflected by cell number. Cytotoxicity is expressed as a concentration dependent reduction of the uptake of the NR after chemical exposure thus providing a sensitive, integrated signal of both cell integrity and growth inhibition.

## VI. DEFINITIONS

**A.** *Hill function*: a four parameter logistic mathematical model relating the concentration of test chemical to the response being measured in a sigmoidal shape.

$$Y = \text{Bottom} + \frac{\text{Top} - \text{Bottom}}{1 + 10^{(\text{logIC50} - X)\text{HillSlope}}}$$

where Y= response, X is the logarithm of dose (or concentration), Bottom is the minimum response, Top is the maximum response, logIC50 is logarithm of X at the response midway between Top and Bottom, and HillSlope describes the steepness of the curve.

**B**. *Documentation*: all methods and procedures will be noted in a Study Workbook; logs will be maintained for general laboratory procedures and equipment (e.g., media preparation, test chemical preparation, incubator function); all optical density data obtained from the spectrophotometer plate reader will be saved in electronic and paper formats; all calculations of ICx values and other derived data will be in electronic and paper format; all data will be archived.

## VII. PROCEDURES

### A. Materials

#### 1. Cell Lines

BALB/c 3T3 cells, clone 31
CCL-163, LGC Reference Materials, Customer Service, Queens Road, Teddington, Middlesex, TW110LY, UK
CCL-163, American Type Culture Collection [ATCC], Manassas, VA, USA)

#### 2. Technical Equipment

[Note: Suggested brand names/vendors are listed in parentheses. Equivalents may be used.]

a) Incubator: 37ºC ± 1ºC, 90 % ± 5 % humidity, 5.0 % ± 1 % $CO_2$/air
b) Laminar flow clean bench/cabinet (standard: "biological hazard")
c) Water bath: 37ºC ± 1ºC
d) Inverse phase contrast microscope
e) Sterile glass tubes with caps (e.g., 5 mL)
f) Centrifuge (optionally: equipped with microtiter plate rotor)
g) Laboratory balance
h) 96-well plate spectrophotometer (i.e., plate reader) equipped with 540 nm ± 10 nm filter
i) Shaker for microtiter plates
j) Cell counter or hemocytometer
k) Pipetting aid
l) Pipettes, pipettors (multi-channel and single channel; multichannel repeater pipette), dilution block
m) Cryotubes
n) Tissue culture flasks (e.g., 75 - 80 $cm^2$, 25 $cm^2$)
o) 96-well flat bottom tissue culture microtiter plates (e.g., Nunc # 167 008; Falcon tissue culture-treated)
p) pH paper (wide and narrow range)
q) Multichannel reagent reservoir
r) Waterbath sonicator
s) Magnetic stirrer
t) Antistatic bar ionizer/antistatic gun (optional for neutralizing static on 96-well plates)
u) Dry heat block (optional)
v) Adhesive film plate sealers (e.g., Excel Scientific SealPlate™,Cat # STR-SEAL-PLT or equivalent)
w) Vortex mixer
x) Filters/filtration devices

[Note: Tissue culture flasks and microtiter plates should be prescreened to ensure that they adequately support the growth of 3T3 cells. Multi-channel repeater pipettes may be used for plating cells in the 96-well plates, dispensing plate rinse solutions, NR medium, and desorb solution. Do not use the repeater pipette for dispensing test chemicals to the cells.]

**3. Chemicals, Media, and Sera**

a) Dulbecco's Modification of Eagle's Medium (DMEM) without L-Glutamine; should have high glucose [4.5gm/l] (e.g., ICN-Flow Cat. No. 12-332-54)
b) L-Glutamine 200 mM (e.g., ICN-Flow # 16-801-49)
c) New Born Calf Serum (NBCS or NCS) (e.g., Biochrom # SO 125)
d) 0.05 % Trypsin/0.02 % EDTA solution (e.g., SIGMA T 3924, ICN-Flow, # 16891-49)
e) Phosphate buffered saline (PBS) without $Ca^{2+}$ and $Mg^{2+}$(for trypsinization)
f) Hanks' Balanced Salt Solution (HBSS) without $Ca^{2+}$ and $Mg^{2+}$(CMF-HBSS)
g) Dulbecco's Phosphate Buffered Saline (D-PBS) [formulation containing calcium and magnesium cations; glucose optional] (for rinsing)
h) Penicillin/streptomycin solution (e.g. ICN-Flow # 16-700-49)
i) Neutral Red (NR) Dye – tissue culture-grade; liquid form (e.g., SIGMA N 2889); powder form (e.g., SIGMA N 4638)
j) Dimethyl sulfoxide (DMSO), U.S.P. analytical grade (Store under nitrogen @ -20ºC)
k) Ethanol (ETOH), U.S.P. analytical grade (100 %, non-denatured for test chemical preparation; 95 % can be used for the desorb solution)
l) Glacial acetic acid, analytical grade
m) Distilled $H_2O$ or any purified water suitable for cell culture and NR desorb solution (sterile)
n) Sterile/non-sterile paper towels (for blotting 96-well plates)

[Note: Due to lot variability of NBCS/NCS, first check a lot for growth stimulating properties with 3T3 cells (approximately 20-24 h doubling time) and then reserve a sufficient amount of NBCS/NCS. May use pre-tested serum lot from Phases Ia, Ib, and II of the validation study if the serum has been stored under appropriate conditions and shelf-life has not expired.]

**B. Preparations of Media and Solutions**

[Note: All solutions (except NR stock solution, NR medium and NR desorb), glassware, pipettes, etc., shall be sterile and all procedures should be carried out under aseptic conditions and in the sterile environment of a laminar flow cabinet (biological hazard standard). All methods and procedures will be adequately documented.]

**1. Media**

DMEM (buffered with sodium bicarbonate) supplemented with (final concentrations in DMEM are quoted):

a) for freezing (Freeze Medium); contains 2X concentration of NBCS/NCS and DMSO of final freezing solution

| | |
|---|---|
| 40 % | NBCS/NCS |
| 20 % | DMSO |

b) for routine culture (Routine Culture Medium)

| | |
|---|---|
| 10 % | NBCS/NCS |
| 4 mM | Glutamine |

c) for test chemical dilution (Chemical Dilution Medium)

| | |
|---|---|
| 4 mM | Glutamine |
| 200 IU/mL | Penicillin |
| 200 µg/mL | Streptomycin |

d) for dilution of NR stock solution (NR Dilution Medium)

| | |
|---|---|
| 5 % | NBCS/NCS |
| 4 mM | Glutamine |
| 100 IU/mL | Penicillin |
| 100 µg/mL | Streptomycin |

[Note: The Chemical Dilution Medium with test chemical will dilute the serum concentration of the Routine Culture Medium in the test plate to 5 %. Serum proteins may mask the toxicity of the test substance, but serum cannot be totally excluded because cell growth is markedly reduced in its absence.]

Completed media formulations should be kept at approximately 2-8° C and stored for no longer than two weeks.

**2. Neutral Red (NR) Stock Solution**

The liquid tissue culture-grade stock NR Solution will be the first choice for performing the assay (e.g., SIGMA #N2889, 3.3 mg/mL). Store liquid tissue culture-grade NR Stock Solution at the storage conditions and shelf-life period recommended by the manufacturer.

If the liquid form is not available, the following formulation can be prepared.

EXAMPLE: 0.25 g NR Dye powder in 100 mL $H_2O$

The NR Stock Solution (powder in water) should be stored in the dark at room temperature for up to two months.

**3. Neutral Red (NR) Medium**

<u>EXAMPLE</u>:

| | |
|---|---|
| 0.758 mL (3.3 mg NR dye/mL solution) | NR Stock Solution |
| 99.242 mL | NR Dilution Medium (pre-warmed to 37° C) |

The final concentration of the NR Medium is **<u>25 µg NR dye/mL</u>** and aliquots will be prepared on the day of application.

[Note: The NR Medium shall be filtered (e.g., Millipore filtering, 0.2 – 0.45 µm pore size) to reduce NR crystals. Aliquots of the NR Medium should be maintained at 37° C (e.g., in a waterbath) before adding to the cells and used within 30 min of preparation but also used within 15 min after removing from 37° C storage.]

**4. Ethanol/Acetic Acid Solution (NR Desorb)**

| | |
|---|---|
| 1 % | Glacial acetic acid solution |
| 50 % | Ethanol |
| 49 % | $H_2O$ |

## C. Methods

**1. Cell Maintenance and Culture Procedures**

BALB/c 3T3 cells are routinely grown as a monolayer in tissue culture grade flasks (e.g., 75 - 80 $cm^2$) at 37ºC ± 1ºC, 90 % ± 5 % humidity, and 5.0 % ± 1 % $CO_2$/air. The cells should be examined on a daily (i.e., on workdays) basis under a phase contrast microscope, and any changes in morphology or their adhesive properties noted in a Study Workbook.

**2. Receipt of Cryopreserved BALB/c 3T3 Cells**

Upon receipt of cryopreserved BALB/c 3T3 cells, the vial(s) of cells shall be stored in a liquid nitrogen freezer until needed.

**3. Thawing Cells**

Thaw cells by putting ampules into a water bath at 37°C ± 1ºC. Leave for as brief a time as possible.

a) Resuspend the cells in pre-warmed Routine Culture Medium and transfer into pre-warmed Routine Culture Medium in a tissue-culture flask.

b) Incubate at 37ºC ± 1ºC, 90 % ± 5 % humidity, and 5.0 % ± 1 % $CO_2$/air.

c) When the cells have attached to the bottom of the flask (within 4 to 24 h), decant the supernatant and replace with fresh pre-warmed (37ºC) medium. Culture as described above.

d) Passage at least two times before using the cells in a cytotoxicity test.

A fresh batch of frozen cells from the stock lot of cells should be thawed out and cultured approximately every two months. This period resembles a sequence of about 18 passages.

**4. Routine Culture of BALB/C 3T3 Cells**

When cells exceed 50 % confluence (but less than 80 % confluent) they should be removed from the flask by trypsinization:

a) Decant medium, briefly rinse cultures with 5 mL PBS or Hanks' BSS (without $Ca^{2+}$, $Mg^{2+}$) per 25 $cm^2$ flask (15 mL per 75 $cm^2$ flask). Wash cells by gentle agitation to remove any remaining serum that might inhibit the action of the trypsin.

b) Discard the washing solution. Repeat the rinsing procedure and discard the washing solution.

c) Add 1-2 mL trypsin-EDTA solution per 25 $cm^2$ to the monolayer for a few seconds (e.g., 15-30 seconds).

d) Remove excess trypsin-EDTA solution and incubate the cells at room temperature.

e) After 2-3 minutes (min), lightly tap the flask to detach the cells into a single cell suspension.

**5. Cell Counting**

After detaching the cells, add 0.1-0.2 mL of pre-warmed (37ºC) Routine Culture Medium/$cm^2$ to the flask (e.g., 2.5 mL for a 25 $cm^2$ flask). Disperse the monolayer by gentle trituration. It is important to obtain a single cell suspension for exact counting. Count a sample of the cell suspension obtained using a hemocytometer or cell counter (e.g., Coulter counter).

**6. Subculture of Cells**

After determination of cell number, the culture can be sub-cultured into other flasks or seeded into 96-well microtiter plates. BALB/c 3T3 cells are routinely passaged at suggested cell densities as listed in the table (approximate doubling time is 20-24 h). The individual laboratories will need to determine and adjust the final density to achieve appropriate growth.

**Table 1. Cell Density Guidelines for Subculturing**

| Days in Culture | Seeding Density (cells/$cm^2$) | Total Cells per 25 $cm^2$ flask | Total Cells per 75 $cm^2$ flask |
|---|---|---|---|
| 2 | 16800 | $4.2 \times 10^5$ | $1.26 \times 10^6$ |
| 3 | 8400 | $2.1 \times 10^5$ | $6.3 \times 10^5$ |
| 4 | 4200 | $1.05 \times 10^5$ | $3.15 \times 10^5$ |

[Note: It is important that cells have overcome the lag growth phase when they are used for the test.]

**7. Freezing Cells** (procedure required only if current stock of cells is depleted)

Stocks of BALB/c 3T3 cells can be stored in sterile, freezing tubes in a liquid nitrogen freezer. DMSO is used as a cryoprotective agent.

a) Centrifuge trypsinized cells at approximately 200 x g.

b) Suspend the cells in cold Routine Culture Medium (half the final freezing volume) so a final concentration of 1-5x$10^6$ cells/mL can be attained.

c) Slowly add cold Freeze Medium to the cells so that the solvent will equilibrate across the cell membranes. Bring the cell suspension to the final freezing volume. The final cell suspension will be 10 % DMSO. Aliquot the cell suspension into freezing tubes and fill to 1.8 mL.

d) Place the tubes into an insulated container (e.g., styrofoam trays) and place in a freezer (-70 to -80°C) for 24 h. This gives a freezing rate of approximately 1°C/min. The laboratory needs to ensure that the freezing protocol is applicable to the 3T3 cells and that the cells are viable when removed from cryopreservation.

e) Place the frozen tubes into liquid nitrogen for storage.

**8. Preparation of Cells for Assays**

a) Cultured cells that are going to be used in seeding the 96-well plates should be fed fresh medium the day before subculturing to the plates. On the day of plate seeding, prepare a cell suspension of 2.0 – 3.0x$10^4$ cells/mL in Routine Culture Medium. Using a multi-channel pipette, dispense 100 µl Routine Culture Medium only into the peripheral wells (blanks) of a 96-well tissue culture microtiter plate (See **Section VII.F.1**). In the remaining wells, dispense 100 µl of a cell suspension of 2.0 – 3.0x$10^4$ cells/mL (= 2.0 – 3.0x$10^3$ cells/well). The seeding density should be noted to ensure that the cells in the control wells are not overgrown after three days (i.e., 24 h incubation in step **b** and 48 h exposure to test chemicals). Prepare one plate per chemical to be tested.

b) Incubate cells for 24 ± 2 h (37ºC ± 1ºC, 90 % ± 5 % humidity, 5.0 % ± 1 % $CO_2$/air) so that cells form a less than half (< 50%) confluent monolayer. This incubation period assures cell recovery and adherence and progression to exponential growth phase.

c) Examine each plate under a phase contrast microscope to assure that cell growth is relatively even across the microtiter plate. This check is performed to identify experimental and systemic cell seeding errors. Record observations in the Study Workbook.

**9. Determination of Doubling Time**

a) A cell doubling time procedure was performed on the initial lot of cells that was used in the first cell culture assays of Phase Ia of the Validation Study. The doubling time only needs to be determined in Phase III if there is a change in the lot of cells used. Establish cells in culture and trypsinize cells as per **Section VII.C.4** for subculture. Resuspend cells in NR Dilution Medium (5 % NBCS/NCS). Seed cells at 4200 cells/$cm^2$.

b) Seed five sets of cell culture vessels in triplicate for each cell type (e.g., 15 tissue culture dishes [60mm x 15mm]). Use appropriate volume of culture medium for the culture vessels. Note number of cells placed into each culture dish. Place dishes into the incubators (37ºC ± 1ºC, 90 % ± 5 % humidity, 5.0 % ± 1 % $CO_2$/air).

c) After 4 - 6 hours (use the same initial measurement time for each subsequent doubling time experiment), remove three culture dishes and trypsinize cells. Count cells using a cell counter or hemocytometer. Cell viability may be determined by dye exclusion (e.g., Trypan Blue; Nigrosin) if Study Director sees a need. Use appropriate size exclusion limits if using a Coulter counter. Determine the total number of cells and document. Repeat sampling at 24 h, 48 h, 72 h, and 96 h post inoculation. Change culture medium at 72 h or sooner in remaining dishes if indicated by pH drop.

d) Plot cell concentration (per mL of medium) on a log scale against time on a linear scale. Determine lag time and population doubling time. Additional dishes and time are needed if the entire growth curve is to be determined (lag phase, log phase, plateau phase).

## D. Preparation of Test Chemicals

The Study Management Team will provide direction on the solvent to be used for each test chemical. [Note: Preparation under red or yellow light is recommended to preserve chemicals that degrade upon exposure to light.]

### 1. Test Chemicals in Solution

a) Allow test chemicals to equilibrate to room temperature before dissolving and diluting.

b) Prepare test chemical immediately prior to use. Test chemical solutions should not be prepared in bulk for use in subsequent tests. Ideally, the solutions must not be cloudy nor have noticeable precipitate. Each stock dilution should have at least 1-2 mL total volume to ensure adequate solution for the test wells in a single 96-well plate. The SMT may direct the Study Director to store an aliquot (e.g., 1 mL) of the highest 2X stock solution (e.g., low solubility chemicals) in a freezer (e.g., -70°C) for use in future chemical analyses.

c) For chemicals dissolved in DMSO or ethanol, the final DMSO or ethanol concentration for application to the cells must be 0.5 % (v/v) in the vehicle controls and in all of the eight test concentrations.

d) The stock solution for each test chemical should be prepared at the highest concentration found to be soluble in the solubility test conducted per the *Test Method Protocol for Solubility Determination*. Thus, the highest test concentration applied to the cells in each range finding experiment is:
   - 0.5 times the highest concentration found to be soluble in the solubility test, if the chemical was soluble in Chemical Dilution Medium, or

- 1/200 the highest concentration found to be soluble in the solubility test if the chemical was soluble in ethanol or DMSO.

e) The seven lower concentrations in the range finding experiment would then be prepared by successive dilutions that decrease by one log unit each. The following example illustrates the preparation of test chemical in solvent and the dilution of dissolved test chemical in Chemical Dilution Medium before application to 3T3 cells.

Example: Preparation of Test Chemical in Solvent Using a Log Dilution Scheme

If DMSO was determined to be the preferred solvent at Tier 2 of the solubility test (i.e., 200,000 µg/mL), dissolve the chemical in DMSO at 200,000 µg/mL for the chemical stock solution.

1) Label eight tubes 1 – 8. Add 0.9 mL solvent (e.g., DMSO) to tubes 2 -- 8.

2) Prepare stock solution of 200,000 µg test chemical/mL solvent in tube # 1.

3) Add 0.1 mL of 200,000 µg/mL dilution from tube #1 to tube #2 to make a 1:10 dilution in solvent (i.e., 20,000 µg/mL).

4) Add 0.1 mL of 20,000 µg/mL dilution from tube #2 to tube #3 to make another 1:10 dilution (i.e., 1:100 dilution from stock solution) in solvent (i.e., 2,000 µg/mL)

5) Continuing making serial 1:10 dilutions in the prepared solvent tubes.

6) Since each concentration is 200 fold greater than the concentration to be tested, make a 1:100 dilution by diluting 1 part dissolved chemical in each tube with 99 parts of Chemical Dilution Medium (e.g., 0.1 mL test chemical in DMSO + 9.9 mL Chemical Dilution Medium) to derive the eight 2X concentrations for application to 3T3 cells. Each 2X test chemical concentration will then contain 1 % v/v solvent. The 3T3 cells will have 0.05 mL Routine Culture Medium in the wells prior to application of the test chemical. By adding 0.05 mL of the appropriate 2X test chemical concentration to the appropriate wells, the test chemical will be diluted appropriately (e.g., highest concentration in well will be 1,000 µg/mL) in a total of 0.1 mL and the solvent concentration in the wells will be 0.5% v/v.

7) A test article prepared in Chemical Dilution Medium, DMSO, or ethanol may precipitate upon transfer into the Routine Culture Medium. The 2X dosing solutions should be evaluated for precipitates and the results recorded in the workbook. It will be permissible to test all of the dosing solutions in the dose range finding assay and main experiments. However, doses containing test article precipitates should be avoided and generally will not be used in the ICx determinations for the definitive tests. Precipitates in 2X dosing solutions are permissible for range finder tests but not for definitive tests.

Document all test chemical preparations in the Study Workbook.

**2. pH of Test Chemical Solutions**

Prior to or immediately after application of the test chemical to the 96-well plate, measure the pH of the highest 2X dosing concentration of the test chemical (i.e., C1 in the test plate, see Figure 1) in culture medium. Use pH paper (e.g., pH 0 - 14 to estimate and pH 5 – 10 to determine more precise value; or Study Director's discretion) for measurements. The pH paper should be in contact with the solution for approximately one minute. Document the pH and note the color of the 2X concentration medium (i.e., in the EXCEL® template). Medium color for all dosing dilutions should be noted in the workbooks. Do not adjust the pH.

**3. Concentrations of Test Chemical**

a) Range Finder Experiment

Test eight concentrations of the test chemical by diluting the stock solution with a constant factor covering a large range. The initial dilution series shall be log dilutions (e.g., 1:10, 1:100, 1:1000, etc.).

If a range finder experiment does not generate enough cytotoxicity, then higher doses should be attempted. If cytotoxicity is limited by solubility, then more stringent solubility procedures to increase the stock concentration (to the maximum concentration specified in Section VII.D.3.b.) should be employed. Place the test chemical concentration into an incubator (37ºC ± 1ºC, 90 % ± 5 % humidity, 5.0 % ± 1 % $CO_2$/air) and stir or rock for up to 3 hours, if necessary, to facilitate dissolution. For stocks prepared in medium, vessel caps should be loose to allow for $CO_2$ exchange. Proceed with dosing solution preparation and dosing.

- If a range finding test produces a biphasic curve, then the doses selected for the subsequent main experiments should cover the most toxic dose-response range (see Example 1 – the most toxic range is 0.001 – 0.1 µg/mL).

**Example 1 – Biphasic Curve**

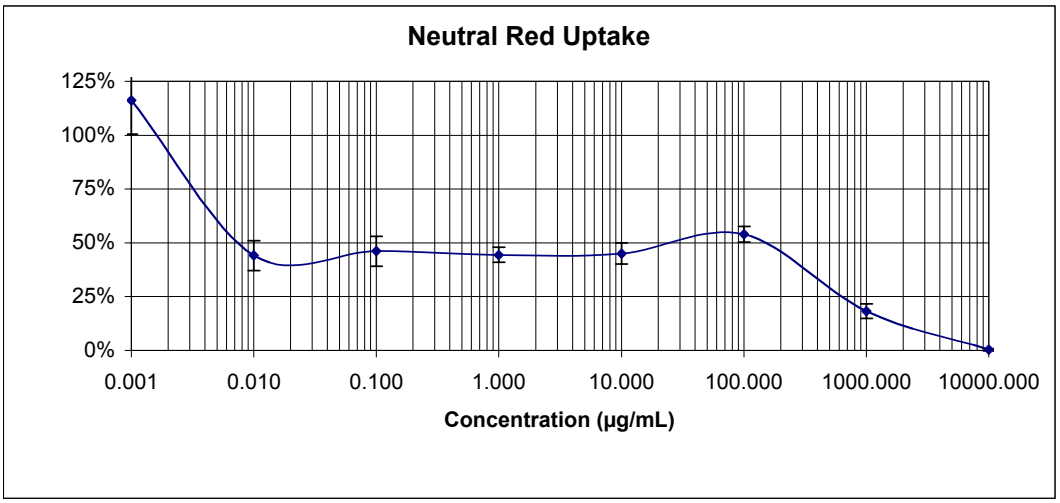

b) Main Experiment

[Note: After the range finding assay is completed, the definitive concentration-response experiment shall be performed three times on three different days for each chemical (i.e., one plate per day per chemical.]

Depending on the slope of the concentration-response curve estimated from the range finder, the dilution/progression factor in the concentration series of the main experiment should be smaller (e.g., dilution factor of $\sqrt[6]{10} = 1.47$). Cover the relevant concentration range around the $IC_{50}$ (> 0 % and < 100 % effect) preferably with several points of a graded effect, but with a minimum of two points, one on each side of the estimated $IC_{50}$ value, avoiding too many non-cytotoxic and/or 100 %-cytotoxic concentrations. Experiments revealing less than one cytotoxic concentration on each side of the $IC_{50}$ value shall be repeated, where possible, with a smaller dilution factor (see **Section VII.E.5.a.4**). Each experiment should have at least one cytotoxicity value > 0 % and ≤ 50.0 % viability and at least one cytotoxicity value > 50.0 % and < 100 % viability. A progression factor of 1.21 [$\sqrt[12]{10}$] is regarded the smallest factor achievable and will be the lowest dosing interval required.)

Determine which test chemical concentration is closest to the $IC_{50}$ value (e.g., 50 % cytotoxicity). Use that value as a central concentration and adjust dilutions higher and lower in equal steps for the definitive assay.

Maximum Doses to be Tested in the Main Experiments

If minimal or no cytotoxicity was measured in the dose range finding assay, a maximum dose for the main experiments will be established as follows:

- For test chemicals prepared in Chemical Dilution Medium, the highest test article concentration that may be applied to the cells in the main experiments will be either 100 mg/mL, or the maximum soluble dose. Test chemical will be weighed into a glass tube and the weight will be documented. A volume of Chemical Dilution Medium will be added to the vessel so that the concentration is 200,000 µg/mL (200 mg/mL). The solution is mixed using the mechanical procedures that produced solubility when performing the solubility test specified in *Test Method Protocol for Solubility Determination*. If complete solubility is achieved in medium, then 7 additional serial stock dosing solutions may be prepared from the 200 mg/mL 2X stock. If the test chemical is insoluble in medium at 200 mg/ml, proceed by adding medium, in small incremental amounts, to attempt to dissolve the chemical by using the sequence of mechanical procedures specified in *Test Method Protocol for Solubility Determination*. More stringent solubility procedures may be employed if needed based on results from the range finder experiment (**Section VII.D.3.a.**). The highest soluble stock solution will be used to prepare the 7 additional serial stock dosing solutions.

- For test chemicals prepared in either DMSO or ethanol, the highest test article concentration that may be applied to the cells in the main experiments will be either 2.5 mg/mL, or less, depending upon the maximum solubility in solvent. Weigh the test chemical into a glass tube and document the weight. Add the appropriate solvent (determined from the original solubility test) to the vessel so

that the concentration is 500,000 µg/mL (500 mg/mL). Mix the solution using the sequence of mechanical procedures specified in *Test Method Protocol for Solubility Determination*. If complete solubility is achieved in the solvent, then 7 additional serial stock dosing solutions may be prepared from the 500 mg/mL 200X stock. If the test chemical is insoluble in solvent at 500 mg/ml, proceed by adding solvent, in small incremental amounts, to attempt to dissolve the chemical by again using the sequence of mixing procedures. The highest soluble stock solution will be used to prepare the 7 additional serial stock dosing solutions.

- If precipitates are observed in the 2X dilutions, continue with the experiment, make the appropriate observations and documentation, and report data to the SMT.

c) Test Chemical Dilutions

The dosing factor of 3.16 (= $\sqrt[2]{10}$) divides a log into two equidistant steps, a factor of 2.15 (= $\sqrt[3]{10}$) divides a decade into three steps. The factor of 1.47 (= $\sqrt[6]{10}$) divides a log into six equidistant steps, the factor of 1.78 ($\sqrt[4]{10}$) divides a log into four equidistant steps, and the factor of 1.21 (= $\sqrt[12]{10}$) divides the log into 12 steps.

EXAMPLE:

| | | | | | | | | | | | | |
|---|---|---|---|---|---|---|---|---|---|---|---|---|
| 10 | | | | | | 31.6 | | | | | | 100 |
| 10 | | | | 21.5 | | | | 46.4 | | | | 100 |
| 10 | | 14.7 | | 21.5 | | 31.6 | | 46.4 | | 68.1 | | 100 |
| 10 | 12.1 | 14.7 | 17.8 | 21.5 | 26.1 | 31.6 | 38.3 | 46.4 | 56.2 | 68.1 | 82.5 | 100 |

The technical production of decimal geometric concentration series is simple. An example is given for factor 1.47:

*Dilute 1 volume of the highest concentration by adding 0.47 volumes of diluent. After equilibration, dilute 1 volume of this solution by adding 0.47 volumes of diluent...(etc.).*

## E. Test Procedure

### 1. 96-Well Plate Configuration

The 3T3 NRU assay for test chemicals will use the 96-well plate configuration as shown in **Figure 1**.

***Figure 1. 96-Well Plate Configuration for Positive Control (PC) and Test Chemical Assays***

| | 1 | 2 | 3 | 4 | 5 | 6 | 7 | 8 | 9 | 10 | 11 | 12 |
|---|---|---|---|---|---|---|---|---|---|---|---|---|
| A | VCb | VCb | $C_1$b | $C_2$b | $C_3$b | $C_4$b | $C_5$b | $C_6$b | $C_7$b | $C_8$b | VCb | VCb |
| B | VCb | VC1 | $C_1$ | $C_2$ | $C_3$ | $C_4$ | $C_5$ | $C_6$ | $C_7$ | $C_8$ | VC2 | VCb |
| C | VCb | VC1 | $C_1$ | $C_2$ | $C_3$ | $C_4$ | $C_5$ | $C_6$ | $C_7$ | $C_8$ | VC2 | VCb |
| D | VCb | VC1 | $C_1$ | $C_2$ | $C_3$ | $C_4$ | $C_5$ | $C_6$ | $C_7$ | $C_8$ | VC2 | VCb |
| E | VCb | VC1 | $C_1$ | $C_2$ | $C_3$ | $C_4$ | $C_5$ | $C_6$ | $C_7$ | $C_8$ | VC2 | VCb |
| F | VCb | VC1 | $C_1$ | $C_2$ | $C_3$ | $C_4$ | $C_5$ | $C_6$ | $C_7$ | $C_8$ | VC2 | VCb |
| G | VCb | VC1 | $C_1$ | $C_2$ | $C_3$ | $C_4$ | $C_5$ | $C_6$ | $C_7$ | $C_8$ | VC2 | VCb |
| H | VCb | VCb | $C_1$b | $C_2$b | $C_3$b | $C_4$b | $C_5$b | $C_6$b | $C_7$b | $C_8$b | VCb | VCb |

VC1 and VC2 = VEHICLE CONTROL
$C_1 – C_8$ = Test Chemicals or PC (SLS) at eight concentrations (C1 = highest, C8 = lowest)
b = BLANKS (Test chemical or PC, but contain **no** cells)
VCb = VEHICLE CONTROL BLANK (contain **no** cells)

**2. Application of Test Chemical**

a) Two optional methods for rapidly applying the 2X dosing solutions onto the 96-well plates may be utilized.

1) The first method is to add each of the 2X dosing solutions into labeled, sterile reservoirs (e.g., Corning/Costar model 4870 sterile polystyrene 50 mL reagent reservoirs; or Corning/Transtar model 4878 disposable reservoir liners, 8-channel; or other multichannel reservoirs).

2) The second method utilizes a "dummy" plate (i.e., an empty sterile 96-well plate) prepared to hold the dosing solutions immediately prior to treatment of the test plate (with cells). The test chemical and control dosing solutions should be dispensed into the dummy plate in the same pattern/order as will be applied to the plate containing cells. More volume than needed for the test plate (i.e. greater than 50 µl/well) should be in the wells of the dummy plate.

At the time of treatment initiation, a multi-channel micropipettor is used to transfer the 2X dosing solutions, from the reservoirs or dummy plate, to the appropriate wells on the treatment plate (as described in step c. below). These methods will ensure that the dosing solutions can be transferred rapidly to the appropriate wells of the test plate to initiate treatment times and to minimize the range of treatment initiation times across a large number of treatment plates, and to prevent "out of order" dosing.

Do not use a multichannel repeater pipette for dispensing test chemical to the plates.

b) After 24 h ± 2 h incubation of the cells, remove Routine Culture Medium from the cells by careful inversion of the plate (i.e., "dump") over an appropriate receptacle. Gently blot the plate on a sterile paper towel so that the monolayer is minimally disrupted. Do not use automatic plate washers for this procedure nor vacuum aspiration.

c) Immediately add 50 µL of fresh pre-warmed Routine Culture Medium to all of the wells, including the blanks. Fifty microliters (50 µL) of dosing solution will be rapidly transferred from the 8-channel reservoir (or dummy plate) to the appropriate wells of the test plate using a single delivery multi-channel pipettor. For example, the VC may be transferred first (into columns 1, 2, 11, and 12), followed by the test article dosing solutions from lowest to highest dose, so that the same pipette tips on the multi-channel pipettor can be used for the whole plate. [The Vehicle Control blank (VCb) wells (column 1, column 12, wells A2, A11, H2, H11) will receive the Vehicle Control dosing solutions (which should include any solvents used). Blanks for wells A3 – A10 and H3 – H10 shall receive the appropriate test chemical solutions for each concentration (e.g., wells A3 and H3 receive $C_1$ solution).

d) Incubate cells for 48 h ± 0.5 h (37ºC ± 1ºC, 90 % ± 5 % humidity, and 5.0 % ± 1 % $CO_2$/air).

e) **Positive Control**: For each set of test chemical plates used in an assay, a separate plate of positive control concentrations will be set up following the concentration range established in the development of the positive control database in Phase I of the Validation Study. If multiple sets of test chemical plates are set up, then clearly designate the positive control plates for each set; each set will be an individual entity. The Study Director will decide how many test chemical plates will be run with a positive control plate. The mean $IC_{50}$ ± two and a half standard deviations (SD) for the SLS acceptable tests from Phases Ia, Ib, and II (after the removal of outliers) are the values that will be used as an acceptance criterion for test sensitivity for the 3T3 NRU assay. This plate will follow the same schedule and procedures as used for the test chemical plates (including appropriate chemical concentrations in the appropriate wells and meeting test acceptance criteria – see **sections VII.E.1, E.2, and E.5**).

### 3. Microscopic Evaluation

After at least 46 h treatment, examine each plate under a phase contrast microscope to identify systematic cell seeding errors and growth characteristics of control and treated cells. Record any changes in morphology of the cells due to the cytotoxic effects of the test chemical, but do not use these records for any quantitative measure of cytotoxicity. Undesirable growth characteristics of control cells may indicate experimental error and may be cause for rejection of the assay. Use the following Visual Observations Codes in the description of cell culture conditions. Numerical scoring of the cells (see **Section VII.E.3**) should be determined and documented in the Study Workbook and in the appropriate section of Addendum II of the EXCEL® study template.

**Visual Observations Codes**

| Note Code | Note Text |
|---|---|
| | |
| 1 | Normal Cell Morphology |
| 2 | Low Level of Cell Toxicity |
| 3 | Moderate Level of Cell Toxicity |
| 4 | High level of Cell Toxicity |
| 1P | Normal Cell Morphology with Precipitate |
| 2P | Low Level of Cell Toxicity with Precipitate |
| 3P | Moderate Level of Cell Toxicity with Precipitate |
| 4P | High level of Cell Toxicity with Precipitate |
| 5P | Unable to View Cells Due to Precipitate |

**4. Measurement of NRU**

a) Carefully remove (i.e., "dump") the medium with test chemical and rinse the cells very carefully with 250 µL pre-warmed D-PBS. Remove the rinsing solution by dumping and remove excess by gently blotting on paper towels. Add 250 µL NR medium (to all wells including the blanks) and incubate (37ºC ± 1ºC, 90 % ± 5 % humidity, and 5.0 % ± 1 % $CO_2$/air) for 3±0.1 h. Observe the cells briefly during the NR incubation (e.g., between 2 and 3 h – Study Director's discretion) for NR crystal formation. Record observations in the Study Workbook. Study Director can decide to reject the experiment if excessive NR crystallization has occurred.

b) After incubation, remove the NR medium, and carefully rinse cells with 250 µl pre-warmed D-PBS.

c) Decant and blot D-PBS from the plate.

d) Add exactly 100 µl NR Desorb (ETOH/acetic acid) solution to all wells, including blanks.

e) Shake microtiter plate rapidly on a microtiter plate shaker for 20 – 45 min to extract NR from the cells and form a homogeneous solution. Plates should be protected from light by using a cover during shaking.

f) Plates should be still for at least five minutes after removal from the plate shaker (or orbital mixer). If any bubbles are observed, assure that they have been ruptured prior to reading the plate. Measure the absorption (within 60 minutes of adding NR Desorb solution) of the resulting colored solution at 540 nm ± 10 nm in a microtiter plate reader (spectrophotometer), using the blanks as a reference. [Note: Phases Ia and Ib data show the mean OD value for the plate blanks to be 0.057 ± 0.043 for 3T3 cells (± 2.5 standard deviations; data from 3 labs; N = 189). Use this range as a **guide** for assessment of the blank values.] Save raw data in the Excel format as provided by the SMT.

**5. Quality Check of 3T3 NRU Assay**

a) Test Acceptance Criteria

All acceptance criteria (i.e., criteria 1, 2, and 3) must be met for a test to be acceptable.

1) The PC (SLS) $IC_{50}$ must be within ± two and a half (2.5) standard deviations of the historical mean established by the Test Facility (as per **VII.E.2.e**), and must meet criteria 2 and 3, and must have an $r^2$ (coefficient of determination) value calculated for the Hill model fit (i.e., from PRISM® software) ≥ 0.85.

2) The left and right mean of the VCs do not differ by more than 15% from the mean of all VCs.

3) At least one calculated cytotoxicity value > 0 % and ≤ 50.0 % viability and at least one calculated cytotoxicity value > 50.0 % and < 100 % viability must be present.

*Exception:* If a test has only one point between 0 and 100 % **and** the smallest dilution factor (i.e., 1.21) was used **and** all other test acceptance criteria were met, then the test will be considered acceptable.

**Stopping Rule for Insoluble Chemicals**: If the most rigorous solubility procedures have been performed and the assay cannot achieve adequate toxicity to meet the test acceptance criteria after three definitive trials, then the Study Director may end all testing for that particular chemical.

[Note: A corrected mean $OD_{540 \pm 10nm}$ of 0.103 - 0.813 for the VCs is a target range but will not be a test acceptance criterion. Range determined from Phase Ib VC OD values from 3 laboratories (mean ± 2.5 standard deviations, N = 98).]

b) Checks for Systematic Cell Seeding Errors

To check for systematic cell seeding errors, untreated VCs are placed both at the left side (row 2) and the right side (row 11 for the test plates) of the 96-well plate. Aberrations in the cell monolayer for the VCs may reflect a volatile and toxic test article present in the assay. If volatility is suspected, then proceed to **Section VII.E.6**.

Checks for cell seeding errors may also be performed by examining each plate under a phase contrast microscope to assure that cell quantity is consistent.

**6. Volatility of Test Chemicals**

Highly volatile test chemicals may generate vapors from the treatment medium during the test chemical treatment incubation period. These vapors may become resorbed into the treatment medium in adjacent wells, such that culture wells nearest the highest doses may become contaminated by exposure to resorbed test article vapors. If the test chemical is particularly toxic at the doses tested, the cross contamination may be evident as a

significant reduction in viability in the vehicle control cultures (i.e., VC1) adjacent to the highest test chemical doses.

If potential test article volatility is suspected (e.g., for low density liquids) or if the initial range finder test (non-sealed plate) results show evidence of toxic effects in the control cultures (i.e., > 15 % difference in viability between VC1 [column 2] and VC2 [column 11]), then seal the subsequent test plates by the following procedure.

a) Plate Sealer Method

1) Plates and chemicals will be prepared as usual according to **Sections VII.D and VII.E**.
2) Immediately after the 96-well culture plate has been treated with the suspected volatile chemical (**Section VII.E.2.b**), apply the adhesive plate sealer (e.g., using a hand, microplate roller, etc.) directly over the culture wells. Assure that the sealer adheres to each culture well (well tops should be dry). Place the 96-well plate cover over the sealed plate and incubate the plate under specified conditions (**Section VII.E.2.b**). [Note: Do not jam the plate lid over the film to avoid deforming the sealer and causing the sealer to detach from culture wells. Loose fit of the plate lid is acceptable.]
3) At the end of the treatment period, the plate sealer should be carefully removed to avoid spillage. Continue with the NRU assay as per **Section VII.E.4**.

## F. Data Analysis

The Study Director will use good biological/scientific judgment for determining "unusable" wells that will be excluded from the data analysis and provide explanations for the removal of any data from the analysis.

A calculation of cell viability expressed as NRU is made for each concentration of the test chemical by using the mean NRU of the six replicate values (minimum of four acceptable replicate well) per test concentration (blanks will be subtracted). This value is compared with the mean NRU of all VC values. Relative cell viability is then expressed as percent of untreated VC. If achievable, the eight concentrations of each chemical tested will span the range of no effect up to total inhibition of cell viability. Data from the microtiter plate reader shall be transferred to the Excel® spreadsheet template provided by the SMT. The template will automatically determine cell viability, $IC_{50}$ values by linear interpolation, and perform statistical analyses (including statistical identification of outliers). The template will also calculate the concentrations associated with 20 %, 50 %, and 80 % viability using the Hill slope and $EC_{50}$ (i.e., $IC_{50}$) from the Hill function analysis.

The Hill function analysis shall be performed using statistical software (e.g., GraphPad PRISM® 3.0) and a template specified by the SMT to calculate $IC_{20}$, $IC_{50}$, and $IC_{80}$ values (and the associated confidence limits) for each test chemical.

The Testing Facility shall report data using at least three (3) significant figures and shall forward the results from each assay to the SMT through the designated contacts in electronic format and hard copy upon completion of testing. The SMT will be directly responsible for the statistical analyses of the Validation Study data.

## VIII. REFERENCES

Hackenberg, U. and H. Bartling. 1959. Messen und Rechnen im pharmakologischen Laboratorium mit einem speziellen Zahlensystem (WL24-System). Arch. Exp. Pathol. Pharmakol. 235: 437-463.

Spielmann, H., S. Gerner, S. Kalweit, R. Moog, T. Wirnserberger, K. Krauser, R. Kreiling, H. Kreuzer, N.P. Luepke, H.G. Miltenburger, N. Müller, P. Murmann, W. Pape, B. Siegmund, J. Spengler, W. Steiling, and F.J. Wiebel. 1991. Interlaboratory assessment of alternatives to the Draize eye irritation test in Germany. Toxicol. *In Vitro* 5: 539-542.

*Test Method Protocol for Solubility Determination. In Vitro* Cytotoxicity Validation Study. Phase III. August 29, 2003. Prepared by The National Toxicology Program (NTP) Interagency Center for the Evaluation of Alternative Toxicological Methods (NICEATM).

## IX. APPROVAL

| | |
|---|---|
| _____ | _____ |
| **SPONSOR REPRESENTATIVE** | **DATE** |
| **(Print or type name)** | |
| _____ | _____ |
| **Test Facility STUDY DIRECTOR** | **DATE** |
| **(Print or type name)** | |

# Appendix B2

## Test Method Protocol for the Normal Human Epidermal Keratinocyte (NHK) Neutral Red Uptake (NRU) Cytotoxicity Test

***[This Page Intentionally Left Blank]***

# TEST METHOD PROTOCOL
# for the NHK Neutral Red Uptake Cytotoxicity Test

**A Test for Basal Cytotoxicity for an In Vitro Validation Study**
**Phase III**

**November 4, 2003**

**Prepared by**

**The National Toxicology Program (NTP) Interagency Center for the Evaluation of Alternative Toxicological Methods (NICEATM)**

**Based on Standard Operating Procedure Recommendations from an International Workshop Organized by the Interagency Coordinating Committee on the Validation of Alternative Methods (ICCVAM)**

**National Institute of Environmental Health Sciences (NIEHS)**
**National Institutes of Health (NIH)**
**U.S. Public Health Service**
**Department of Health and Human Services**

# TEST METHOD PROTOCOL

## The Normal Human Keratinocyte (NHK) Neutral Red Uptake Cytotoxicity Test
## A Test for Basal Cytotoxicity
## Phase III

### I. PURPOSE

The purpose of this study is to evaluate the cytotoxicity of test chemicals using the Normal Human Keratinocyte (NHK) Neutral Red Uptake (NRU) cytotoxicity test. The data will be used to evaluate the intra- and inter-laboratory reproducibility of the assay and effectiveness of the cytotoxicity assay to predict the starting doses for rodent acute oral systemic toxicity assays. This test method protocol outlines the procedures for performing the cytotoxicity test and is in support of the *in vitro* validation study organized by NICEATM and the European Centre for the Validation of Alternative Methods (ECVAM) and sponsored by NIEHS, U.S. Environmental Protection Agency, and ECVAM. This test method protocol applies to all personnel involved with performing the cytotoxicity assay.

#### A. NHK Neutral Red Uptake Cytotoxicity Test

The NHK NRU test will be performed to analyze the *in vitro* toxicity of 60 blinded/coded test chemicals. This test will be used to determine $IC_{20}$, $IC_{50}$, and $IC_{80}$ values for the predetermined set of test chemicals of varying toxicities.

### II. SPONSOR

**A. Name**: National Institute of Environmental Health Sciences (NIEHS); The National Toxicology Program (NTP) Interagency Center for the Evaluation of Alternative Toxicological Methods (NICEATM)

**B. Address**: P.O. Box 12233
Research Triangle Park, NC 27709

**C. Representative**: *Named Representative*

### III. IDENTIFICATION OF TEST AND CONTROL SUBSTANCES

**A. Test Chemicals**: *Blinded chemicals (60)*

**B. Controls**:

| | |
|---|---|
| Positive: | Sodium Lauryl Sulfate |
| Vehicle (Negative): | Assay medium |
| Solvent (as directed): | Assay medium, DMSO, or ethanol as directed by the Study Management Team, for preparation of test chemicals |

## IV. TESTING FACILITY AND KEY PERSONNEL

**A. Facility Information**

1) Name:
2) Address:
3) Study Director:
4) Laboratory Technician(s):
5) Scientific Advisor:
6) Quality Assurance Director:
7) Safety Manager:
8) Facility Management:

**B. Test Schedule**

1) Proposed Experimental Initiation Date:
2) Proposed Experimental Completion Date:
3) Proposed Report Date:

## V. TEST SYSTEM

The NRU cytotoxicity assay procedure is a cell survival/viability chemosensitivity assay based on the ability of viable cells to incorporate and bind neutral red (NR), a supravital dye. NR is a weak cationic dye that readily penetrates cell membranes by non-ionic diffusion and accumulates intracellularly in lysosomes. Alterations of the cell surface or the sensitive lysosomal membrane lead to lysosomal fragility and other changes that gradually become irreversible. Such changes brought about by the action of xenobiotics result in a decreased uptake and binding of NR. It is thus possible to distinguish between viable, damaged, or dead cells, which is the basis of this assay.

Healthy mammalian cells, when maintained in culture, continuously divide and multiply over time. A toxic chemical, regardless of site or mechanism of action, will interfere with this process and result in a reduction of the growth rate as reflected by cell number. Cytotoxicity is expressed as a concentration dependent reduction of the uptake of the NR after chemical exposure thus providing a sensitive, integrated signal of both cell integrity and growth inhibition.

## VI. DEFINITIONS

**A.**. *Hill function*: a four parameter logistic mathematical model relating the concentration of test chemical to the response being measured in a sigmoidal shape.

$$Y = \text{Bottom} + \frac{\text{Top} - \text{Bottom}}{1 + 10^{(\text{logIC50} - X)\text{HillSlope}}}$$

where Y= response, X is the logarithm of dose (or concentration), Bottom is the minimum response, Top is the maximum response, logIC50 is logarithm of X at the response midway between Top and Bottom, and HillSlope describes the steepness of the curve.

**B.** *Documentation*: all methods and procedures will be noted in a Study Workbook; logs will be maintained for general laboratory procedures and equipment (e.g., media preparation, test chemical preparation, incubator function); all optical density data obtained from the

spectrophotometer plate reader will be saved in electronic and paper formats; all calculations of ICx values and other derived data will be in electronic and paper format; all data will be archived.

## VII. PROCEDURES

### A. Materials

[Note: Suggested brand names/vendors are listed in parentheses. Equivalents may be used unless otherwise noted.]

#### 1. Cell Lines

**Normal Human Epidermal Keratinocytes (NHK)**

Non-transformed cells; from cryopreserved primary or secondary cells (**Clonetics #CC-2507 or equivalent).** Cells will be Clonetics NHK cells.

*Cambrex* [Cambrex Bio Science, 8830 Biggs Ford Road, Walkersville, MD 21793-0127

*Cambrex Europe* [Cambrex Bio Science Verviers, S.P.R.L. Parc Industriel de Petit Rechain, B-4800 Verviers, BELGIUM]

#### 2. Technical Equipment

[Note: Suggested brand names/vendors are listed in parentheses. Equivalents may be used.]

a) Incubator: 37ºC ± 1ºC, 90 % ± 5 % humidity, 5.0 % ± 1 % $CO_2$/air
b) Laminar flow clean bench (standard: "biological hazard")
c) Water bath: 37ºC ± 1ºC
d) Inverse phase contrast microscope
e) Sterile glass tubes with caps (e.g., 5mL)
f) Centrifuge (optionally: equipped with microtiter plate rotor)
g) Laboratory balance
h) 96-well plate spectrophotometer (i.e., plate reader) equipped with 540 nm ± 10 nm filter
i) Shaker for microtiter plates
j) Cell counter or hemocytometer
k) Pipetting aid
l) Pipettes, pipettors (multi-channel and single channel; multichannel repeater pipette), dilution block
m) Cryotubes
n) Tissue culture flasks (75 - 80 $cm^2$, 25 $cm^2$)
o) 96-well flat bottom tissue culture microtiter plates (e.g., Nunc # 167 008; Corning/COSTAR tissue culture-treated)
p) pH paper (wide and narrow range)
q) Multichannel reagent reservoir
r) Waterbath sonicator
s) Magnetic stirrer

t) Antistatic bar ionizer/antistatic gun (optional for neutralizing static on 96-well plates)
u) Dry heat block (optional)
v) Adhesive film plate sealers (e.g., Excel Scientific SealPlate™,Cat # STR-SEAL-PLT or equivalent)
w) Vortex mixer
x) Filters/filtration devices

[Note: Tissue culture flasks and microtiter plates should be prescreened to ensure that they adequately support the growth of NHK. Multi-channel repeater pipettes may be used for plating cells in the 96-well plates, dispensing plate rinse solutions, NR medium, and desorb solution. Do not use the repeater pipette for dispensing test chemicals to the cells.]

**3. Chemicals, Media, and Sera**

a) Keratinocyte Basal Medium without $Ca^{++}$ (KBM®, Clonetics CC-3104) that is completed by adding the KBM® SingleQuots® (Clonetics CC-4131) to achieve the proper concentrations of epidermal growth factor, insulin, hydrocortisone, antimicrobial agents, bovine pituitary extract, and calcium (e.g., Clonetics Calcium SingleQuots®, 300 mM $CaCl_2$, Clonetics # CC-4202).
b) HEPES Buffered Saline Solution (HEPES-BSS) (e.g., Clonetics # CC-5022)
c) 0.025 % Trypsin/EDTA solution (e.g., Clonetics # CC-5012)
d) Trypsin Neutralizing Solution (TNS) (e.g., Clonetics # CC-5002)
e) Phosphate Buffered Saline (PBS)
f) Dulbecco's Phosphate Buffered Saline (D-PBS) [formulation containing calcium and magnesium cations; glucose optional] (for rinsing)
g) Neutral Red (NR) Dye – tissue culture-grade; liquid form (e.g., SIGMA N 2889); powder form (e.g., SIGMA N 4638)
h) Dimethyl sulfoxide (DMSO), U.S.P analytical grade (Store under nitrogen @ -20ºC)
i) Ethanol (ETOH), U.S.P. analytical grade (100 %, non-denatured for test chemical preparation; 95 % can be used for the desorb solution)
j) Glacial acetic acid, analytical grade
k) Hanks' Balanced Salt Solution without $Ca^{2+}$ or $Mg^{2+}$ (CMF-HBSS) (e.g., Invitrogen # 14170)
l) Distilled $H_2O$ or any purified water suitable for cell culture and NR desorb solution (sterile)
m) Sterile/non-sterile paper towels (for blotting 96-well plates)

**B. Preparations of Media and Solutions**

[Note: All solutions (except NR stock solution, NR medium and NR desorb), glassware, pipettes, etc., shall be sterile and all procedures should be carried out under aseptic conditions and in the sterile environment of a laminar flow cabinet (biological hazard standard). All methods and procedures will be adequately documented.]

**1. Media**

a) Routine Culture Medium/Treatment Medium

KBM® (Clonetics CC-3104) supplemented with KBM® SingleQuots® (Clonetics CC-4131) and Clonetics Calcium SingleQuots® (CC-4202) to make 500 mL medium. Final concentration of supplements in medium are:

| | |
|---|---|
| 0.0001 ng/mL | Human recombinant epidermal growth factor |
| 5 μg/mL | Insulin |
| 0.5 μg/mL | Hydrocortisone |
| 30 μg/mL | Gentamicin |
| 15 ng/mL | Amphotericin B |
| 0.10 mM | Calcium |
| 30 μg/mL | Bovine pituitary extract |

*Complete media should be kept at 2-8°C and stored for no longer than two weeks*.

NOTE:
KBM® SingleQuots® contain the following stock concentrations and volumes:

| | | |
|---|---|---|
| 0.1 ng/mL | hEGF | 0.5 mL |
| 5.0 mg/mL | Insulin | 0.5 mL |
| 0.5 mg/mL | Hydrocortisone | 0.5 mL |
| 30 mg/mL | Gentamicin, 15 ug/mL Amphotericin-B | 0.5 mL |
| 7.5 mg/mL | Bovine Pituitary Extract (BPE) | 2.0 mL |

Clonetics Calcium SingleQuots® are 2 mL of 300mM calcium.

165 μl of solution per 500 mL calcium-free medium equals 0.10 mM calcium in the medium.

**2. Neutral Red (NR) Stock Solution**

The liquid tissue culture-grade stock NR Solution will be the first choice for performing the assay (e.g., SIGMA #N2889, 3.3 mg/mL). Store liquid tissue culture-grade NR Stock Solution at the storage conditions and shelf-life period recommended by the manufacturer.

If the liquid form is not available, the following formulation can be prepared.

EXAMPLE: 0.33 g NR Dye powder in 100 mL $H_2O$

The NR Stock Solution (powder in water) should be stored in the dark at room temperature for up to two months.

**3. Neutral Red (NR) Medium**

EXAMPLE:

| | |
|---|---|
| 1.0 mL (3.3 mg NR dye/mL) | NR Stock Solution |
| 99.0 mL | Routine Culture Medium (pre-warmed to 37° C.) |

The final concentration of the NR Medium is **33 µg NR dye/mL** and aliquots will be prepared on the day of application.

[Note: The NR Medium shall be filtered (e.g., Millipore filtering, 0.2 – 0.45 µm pore size) used to reduce NR crystals. Aliquots of the NR Medium should be maintained at 37° C (e.g., in a waterbath) before adding to the cells and used within 30 min of preparation but also used within 15 min after removing from 37° C storage.]

**4. Ethanol/Acetic Acid Solution (NR Desorb)**

| | |
|---|---|
| 1 % | Glacial acetic acid solution |
| 50 % | Ethanol |
| 49 % | $H_2O$ |

## C. Methods

### 1. Cell Maintenance and Culture Procedures

NHK cells are routinely grown as a monolayer in tissue culture grade flasks (e.g., 25 $cm^2$) at 37ºC ± 1ºC, 90 % ± 5 % humidity, and 5.0 % ± 1 % $CO_2$/air. The cells should be examined on a daily (i.e., on workdays) basis under a phase contrast microscope, and any changes in morphology or their adhesive properties must be noted in a Study Workbook.

### 2. Receipt of Cryopreserved Keratinocytes

Upon receipt of cryopreserved keratinocytes, the vial(s) of cells shall be stored in a liquid nitrogen freezer until needed.

### 3. Thawing Cells and Establishing Cell Cultures

a) Thaw cells by putting ampules into a water bath at 37°C for as brief a time as possible. Do not thaw cells at room temperature or by hand. Seed the thawed cells into culture flasks as quickly as possible and with minimal handling.

b) Slowly (taking approximately 1-2 min) add 9 mL of pre-warmed Routine Culture Medium to the cells suspended in the cryoprotective solution and transfer cells into flasks containing pre-warmed Routine Culture Medium (See Table 1).

c) Incubate the cultures at 37ºC ± 1ºC, 90 % ± 5 % humidity, 5.0 % ± 1 % $CO_2$/air until the cells attach to the flask (within 4 to 24 h), at which time the Routine Culture Medium should be removed and replaced with fresh Routine Culture Medium.

d) Unless otherwise specified, the cells should be incubated at 37ºC ± 1ºC, 90 % ± 5 % humidity, 5.0 % ± 1 % $CO_2$/air and fed every 2-3 days until they exceed 50 % confluence (but less than 80 % confluent).

**Table 1. Guidelines for Establishing Cell Cultures**

| Cells/25 $cm^2$ flask<br>(in approximately 5 mL)<br>1 flask each cell concentration | $6.25 \times 10^4$<br>($2500/cm^2$) | $1.25 \times 10^5$<br>($5000/cm^2$) | $2.25 \times 10^5$<br>($9000/cm^2$) |
|---|---|---|---|
| Approximate Time to Subculture | 96+ hours | 72 - 96 hours | 48 - 72 hours |
| Cells to 96-Well Plates | 6 – 8 plates | 6 – 8 plates | 6 – 8 plates |

Cell growth guidelines – actual growth of individual cell lots may vary.

**4. Subculture of NHK Cells to 96-Well Plates**

[Note: It is important that cells have overcome the lag growth phase when they are used for the test. Keratinocytes will be passaged only into the 96-well plates and will not be subcultured into flasks for use in later assays]

a) When the keratinocyte culture in a 25 $cm^2$ flask exceeds 50 % confluence (but less than 80 % confluent), remove the medium and rinse the culture twice with 5 mL HEPES-BSS. The first rinse may be left on the cells for up to 5 minutes and the second rinse should remain on the cells for approximately 5 minutes. Discard the washing solutions.

b) Add 2 mL trypsin/EDTA solution to each flask and remove after 15 to 30 seconds. Incubate the flask at room temperature for 3 to 7 min. When more than 50 % of the cells become dislodged, rap the flask sharply against the palm of the hand.

c) When most of the cells have become detached from the surface, rinse the flask with 5 mL of room temperature TNS. If more than one flask is subcultured, the same 5 mL of TNS may be used to rinse a total of up to two flasks.

d) Then rinse the flask with 5 mL CMF-HBSS and transfer the cell suspension to a centrifuge tube.

e) Pellet the cells by centrifugation for 5 min at approximately 220 x g. Remove the supernatant by aspiration.

f) Resuspend the keratinocyte pellet by gentle trituration (to have single cells) in Routine Culture Medium. It is important to obtain a single cell suspension for exact counting. Count a sample of the cell suspension using a hemocytometer or cell counter.

g) Prepare a cell suspension –1.6 – 2.0 $\times 10^4$ cells/mL in Routine Culture Medium. Using a multi-channel pipette, dispense 125 µl Routine Culture Medium only into the peripheral wells (blanks) of a 96-well tissue culture microtiter plate. In the remaining wells, dispense 125 µl of the cell suspension ($2\times10^3$ – $2.5\times10^3$ cells/well). Prepare one plate per chemical to be tested (see **Figure 1**, **Section VII.E.1**).

h) Incubate cells (37ºC ± 1ºC, 90 % ± 5.0 % humidity, and 5 % ± 1 % $CO_2$/air) so that cells form a 20+ % monolayer (~48-72 h). This incubation period assures cell recovery and adherence and progression to exponential growth phase.

i) Examine each plate under a phase contrast microscope to assure that cell growth is relatively even across the microtiter plate. This check is performed to identify experimental and systemic cell seeding errors. Record observations in the Study Workbook.

**5. Determination of Doubling Time**

a) A cell doubling time procedure was performed on the initial lot of cells that was used in the first cell culture assays of Phase Ia of the Validation Study. The doubling time only needs to be determined in Phase III if there is a change in the lot of cells used. Establish cells in culture and trypsinize cells as per **Section VII.C.4** for subculture. Resuspend cells in appropriate culture medium. Use **Table 1** to determine seeding densities.

b) Seed five sets of cell culture vessels in triplicate for each cell type (e.g., 15 tissue culture dishes [60mm x 15mm]). Use appropriate volume of culture medium for the culture vessels. Note number of cells placed into each culture dish. Place dishes into the incubators (37ºC ± 1ºC, 90 % ± 5 % humidity, 5.0 % ± 1 % $CO_2$/air).

c) After 4-6 hours (use the same initial measurement time for each subsequent doubling time experiment), remove three culture dishes and trypsinize cells. Count cells using a cell counter or hemocytometer. Cell viability may be determined by dye exclusion (e.g., Trypan Blue; Nigrosin). Determine the total number of cells and document. Repeat sampling at 24 hr, 48 hr, 72 hr, and 96 hr post inoculation. Change culture medium at 72 hr or sooner in remaining dishes if indicated by pH drop.

d) Plot cell concentration (per mL of medium) on a log scale against time on a linear scale. Determine lag time and population doubling time. The doubling time will be in the log (exponential) phase of the growth curve. Additional dishes and time are needed if the entire growth curve is to be determined (lag phase, log phase, plateau phase).

## D. Preparation of Test Chemicals

The Study Management Team will provide direction on the solvent to be used for each test chemical. [Note: Preparation under red or yellow light is recommended to preserve chemicals that degrade upon exposure to light.]

**1. Test Chemical in Solution**

a) Allow test chemicals to equilibrate to room temperature before dissolving and diluting.

b) Prepare test chemical immediately prior to use. Test chemical solutions should not be prepared in bulk for use in subsequent tests. Ideally, the solutions must not be cloudy nor have noticeable precipitate. Each stock dilution should have at least 1-2 mL total volume to ensure adequate solution for the test wells in a single 96-well plate. The SMT may direct the Study Director to store an aliquot (e.g., 1 mL) of the

highest 2X stock solution (e.g., low solubility chemicals) in a freezer (e.g., -70°C) for use in future chemical analyses.

c) For chemicals dissolved in DMSO or ethanol, the final DMSO or ethanol concentration for application to the cells must be 0.5 % (v/v) in the vehicle controls and in all of the eight test concentrations.

d) The stock solution for each test chemical should be prepared at the highest concentration found to be soluble in the solubility test (*Test Method Protocol for Solubility Determination*). Thus, the highest test concentration applied to the cells in each range finding experiment is:
   - 0.5 times the highest concentration found to be soluble in the solubility test, if the chemical was soluble in medium, or
   - 1/200 the highest concentration found to be soluble in the solubility test if the chemical was soluble in ethanol or DMSO.

e) The seven lower concentrations in the range finding experiment would then be prepared by successive dilutions that decrease by one log unit each. The following example illustrates the preparation of test chemical in solvent and the dilution of dissolved test chemical in medium before application to NHK cells.

   Example: Preparation of Test Chemical in Solvent Using a Log Dilution Scheme

   If DMSO was determined to be the preferred solvent at Tier 2 of the solubility test (i.e., 200,000 μg/mL), dissolve the chemical in DMSO at 200,000 μg/mL for the chemical stock solution.

   1) Label eight tubes 1 – 8. Add 0.9 mL solvent (e.g., DMSO) to tubes 2 -- 8.

   2) Prepare stock solution of 200,000 μg test chemical/mL solvent in tube # 1.

   3) Add 0.1 mL of 200,000 μg/mL dilution from tube #1 to tube #2 to make a 1:10 dilution in solvent (i.e., 20,000 μg/mL).

   4) Add 0.1 mL of 20,000 μg/mL dilution from tube #2 to tube #3 to make another 1:10 dilution (i.e., 1:100 dilution from stock solution) in solvent (i.e., 2,000 μg/mL)

   5) Continuing making serial 1:10 dilutions in the prepared solvent tubes.

   6) Since each concentration is 200 fold greater than the concentration to be tested, make a 1:100 dilution by diluting 1 part dissolved chemical in each tube with 99 parts of culture medium (e.g., 0.1 mL of test chemical in DMSO + 9.9 mL culture medium) to derive the eight 2X concentrations for application to NHK cells. Each 2X test chemical concentration will then contain 1 % v/v solvent. The NHK cells will have 0.125 mL of culture medium in the wells prior to application of the test chemical. By adding 0.125 mL of the appropriate 2X test chemical concentration to the appropriate wells, the test chemical will be diluted appropriately (e.g., highest concentration in well will be 1,000 μg/mL) in a total of 0.250 mL and the solvent concentration in the wells will be 0.5% v/v.

7) A test article prepared in DMSO or ethanol may precipitate upon transfer into the Routine Culture Medium. The 2X dosing solutions should be evaluated for precipitates and the results recorded in the workbook. It will be permissible to test all of the dosing solutions in the dose range finding assay and main experiments. However, doses containing test article precipitates should be avoided and generally will not be used in the ICx determinations for the definitive tests. Precipitates in 2X dosing solutions are permissible for range finder tests but not for definitive tests.

Document all test chemical preparations in the Study Workbook.

**2. pH of Test Chemical Solutions**

Prior to or immediately after application of the test chemical to the 96-well plate, measure the pH of the highest 2X dosing concentration of the test chemical (i.e., C1 in the test plate, see Figure 1) in culture medium. Use pH paper (e.g., pH 0 – 14 to estimate and pH 5 – 10 to determine more precise value; or Study Director's discretion). The pH paper should be in contact with the solution for approximately one minute. Document the pH and note the color of the 2X concentration medium (i.e., in the EXCEL® template). Medium color for all dosing dilutions should be noted in the workbooks. Do not adjust the pH.

**3. Concentrations of Test Chemical**

a) Range Finder Experiment

Test eight concentrations of the test chemical by diluting the stock solution with a constant factor covering a large range. The initial dilution series shall be log dilutions (e.g., 1:10, 1:100, 1:1000, etc.).

If a range finder experiment does not generate enough cytotoxicity, then higher doses should be attempted. If cytotoxicity is limited by solubility, then more stringent solubility procedures to increase the stock concentration (to the maximum concentration specified in Section VII.D.3.b.) should be employed. Place the highest test chemical concentration into an incubator (37ºC ± 1ºC, 90 % ± 5 % humidity, 5.0 % ± 1 % $CO_2$/air) and stir or rock for up to 3 hours, if necessary, to facilitate dissolution. For stocks prepared in medium, vessel caps should be loose to allow for $CO_2$ exchange. Proceed with dosing solution preparation and dosing.

- If a range finding test produces a biphasic curve, then the doses selected for the subsequent main experiments should cover the most toxic dose-response range (see Example 1 – the most toxic range is 0.001 – 0.1 µg/mL).

**Example 1 – Biphasic Curve**

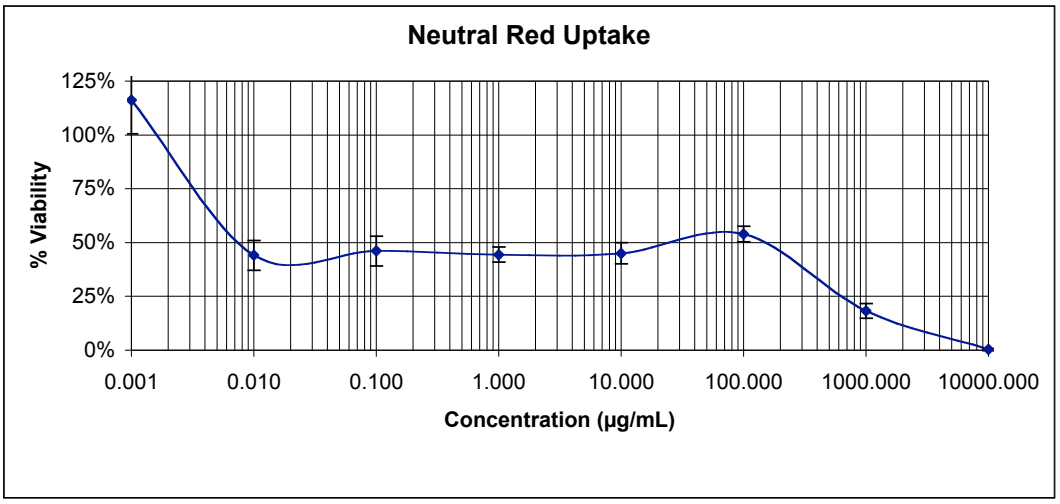


b) Main Experiment

[Note: After the range finding assay is completed, the definitive concentration-response experiment shall be performed <u>three times on three different days for each chemical (i.e., one plate per day per chemical).</u>]

Depending on the slope of the concentration-response curve estimated from the range finder, the dilution/progression factor in the concentration series of the main experiment should be smaller (e.g., dilution factor of $\sqrt[6]{10} = 1.47$). Cover the relevant concentration range around the $IC_{50}$ (> 0 % and < 100 % effect) preferably with several points of a graded effect, but with a minimum of two points, one on each side of the estimated $IC_{50}$ value, avoiding too many <u>non-cytotoxic</u> and/or <u>100 %-cytotoxic</u> concentrations. Experiments revealing less than one cytotoxic concentration on each side of the $IC_{50}$ value shall be repeated, where possible, with a smaller dilution factor (see **Section VII.E.5.a.4**). Each experiment should have at least one cytotoxicity value > 0 % and ≤ 50.0 % viability and at least one cytotoxicity value > 50.0 % and < 100 % viability. A progression factor of 1.21 [$\sqrt[12]{10}$] is regarded the smallest factor achievable and will be the lowest dosing interval required.)

Determine which test chemical concentration is closest to the $IC_{50}$ value (e.g., 50 % cytotoxicity). Use that value as a central concentration and adjust dilutions higher and lower in equal steps for the definitive assay.

<u>Maximum Doses to be Tested in the Main Experiments</u>
If minimal or no cytotoxicity was measured in the dose range finding assay, a maximum dose for the main experiments will be established as follows:

- For test chemicals prepared in Routine Culture Medium, the highest test article concentration that may be applied to the cells in the main experiments will be either 100 mg/mL, or the maximum soluble dose. Test chemical will be weighed into a glass tube and the weight will be documented. A volume of Routine

Culture Medium will be added to the vessel so that the concentration is 200,000 µg/mL (200 mg/mL). The solution is mixed using the mechanical procedures specified in *Test Method Protocol for Solubility Determination*. If complete solubility is achieved in medium, then 7 additional serial stock dosing solutions may be prepared from the 200 mg/mL 2X stock. If the test chemical is insoluble in medium at 200 mg/ml, proceed by adding medium, in small incremental amounts, to attempt to dissolve the chemical by using the sequence of mixing procedures specified in *Test Method Protocol for Solubility Determination*. More stringent solubility procedures may be employed if needed based on results from the range finder experiment (**Section VII.D.3.a.**). The highest soluble stock solution will be used to prepare the 7 additional serial stock dosing solutions.

- For test chemicals prepared in either DMSO or ethanol, the highest test article concentration that may be applied to the cells in the main experiments will be either 2.5 mg/mL, or less, depending upon the maximum solubility in solvent. Test chemical will be weighed into a glass tube and the weight will be documented. A volume of the appropriate solvent (determined from the original solubility test) will be added to the vessel so that the concentration is 500,000 µg/mL (500 mg/mL). The solution is mixed as specified in *Test Method Protocol for Solubility Determination*. If complete solubility is achieved in the solvent, then 7 additional serial stock dosing solutions may be prepared from the 500 mg/mL 200X stock. If the test chemical is insoluble in solvent at 500 mg/ml, proceed by adding solvent, in small incremental amounts, to attempt to dissolve the chemical by using the sequence of mixing procedures. The highest soluble stock solution will be used to prepare the 7 additional serial stock dosing solutions.

- If precipitates are observed in the 2X dilutions, continue with the experiment, make the appropriate observations and documentation, and report data to the SMT.

c) Test Chemical Dilutions

The dosing factor of 3.16 (= $\sqrt[2]{10}$) divides a log into two equidistant steps, a factor of 2.15 (= $\sqrt[3]{10}$) divides a decade into three steps. The factor of 1.47 (= $\sqrt[6]{10}$) divides a log into six equidistant steps, the factor of 1.78 ($\sqrt[4]{10}$) divides a log into four equidistant steps, and the factor of 1.21 (= $\sqrt[12]{10}$) divides the log into 12 steps.

EXAMPLE:

| | | | | | | | | | | | | |
|---|---|---|---|---|---|---|---|---|---|---|---|---|
| 10 | | | | | | 31.6 | | | | | | 100 |
| 10 | | | | 21.5 | | | | 46.4 | | | | 100 |
| 10 | | 14.7 | | 21.5 | | 31.6 | | 46.4 | | 68.1 | | 100 |
| 10 | 12.1 | 14.7 | 17.8 | 21.5 | 26.1 | 31.6 | 38.3 | 46.4 | 56.2 | 68.1 | 82.5 | 100 |

The technical production of decimal geometric concentration series is simple. An example is given for factor 1.47:

*Dilute 1 volume of the highest concentration by adding 0.47 volumes of diluent. After equilibration, dilute 1 volume of this solution by adding 0.47 volumes of diluent...(etc.).*

## E. Test Procedure

### 1. 96-Well Plate Configuration

The NHK NRU assay for test chemicals will use the 96-well plate configuration shown in **Figure 1**.

***Figure 1. 96-Well Plate Configuration for Positive Control (PC) and Test Chemical Assays***

| | 1 | 2 | 3 | 4 | 5 | 6 | 7 | 8 | 9 | 10 | 11 | 12 |
|---|---|---|---|---|---|---|---|---|---|---|---|---|
| A | VCb | VCb | $C_1$b | $C_2$b | $C_3$b | $C_4$b | $C_5$b | $C_6$b | $C_7$b | $C_8$b | VCb | VCb |
| B | VCb | VC1 | $C_1$ | $C_2$ | $C_3$ | $C_4$ | $C_5$ | $C_6$ | $C_7$ | $C_8$ | VC2 | VCb |
| C | VCb | VC1 | $C_1$ | $C_2$ | $C_3$ | $C_4$ | $C_5$ | $C_6$ | $C_7$ | $C_8$ | VC2 | VCb |
| D | VCb | VC1 | $C_1$ | $C_2$ | $C_3$ | $C_4$ | $C_5$ | $C_6$ | $C_7$ | $C_8$ | VC2 | VCb |
| E | VCb | VC1 | $C_1$ | $C_2$ | $C_3$ | $C_4$ | $C_5$ | $C_6$ | $C_7$ | $C_8$ | VC2 | VCb |
| F | VCb | VC1 | $C_1$ | $C_2$ | $C_3$ | $C_4$ | $C_5$ | $C_6$ | $C_7$ | $C_8$ | VC2 | VCb |
| G | VCb | VC1 | $C_1$ | $C_2$ | $C_3$ | $C_4$ | $C_5$ | $C_6$ | $C_7$ | $C_8$ | VC2 | VCb |
| H | VCb | VCb | $C_1$b | $C_2$b | $C_3$b | $C_4$b | $C_5$b | $C_6$b | $C_7$b | $C_8$b | VCb | VCb |

| | | |
|---|---|---|
| VC1 and VC2 | = | VEHICLE CONTROL |
| $C_1 – C_8$ | = | Test Chemicals or PC (SLS) at eight concentrations (C1 = highest, C8 = lowest) |
| b | = | BLANKS (Test chemical or PC, but contain **no** cells) |
| VCb | = | VEHICLE CONTROL BLANK (contain **no** cells) |

### 2. Application of Test Chemical

a) Two optional methods for rapidly applying the 2X dosing solutions onto the 96-well plates may be utilized.

1) The first method is to add each of the 2X dosing solutions into labeled, sterile reservoirs (e.g., Corning/Costar model 4870 sterile polystyrene 50 mL reagent reservoirs or Corning/Transtar model 4878 disposable reservoir liners, 8-channel; or other multichannel reservoirs).

2) The second method utilizes a “dummy” plate (i.e., an empty sterile 96-well plate) prepared to hold the dosing solutions immediately prior to treatment of the test plate

(with cells). The test chemical and control dosing solutions should be dispensed into the dummy plate in the same pattern/order as will be applied to the plate containing cells. More volume than needed for the test plate (i.e. greater than 125 µl/well) should be in the wells of the dummy plate.

At the time of treatment initiation, a multi-channel micropipettor is used to transfer the 2X dosing solutions, from the reservoirs or dummy plate, to the appropriate wells on the treatment plate (as described in step c. below). These methods will ensure that the dosing solutions can be transferred rapidly to the appropriate wells of the test plate to initiate treatment times and to minimize the range of treatment initiation times across a large number of treatment plates, and to prevent "out of order" dosing. Do not use a multichannel repeater pipette for dispensing test chemical to the plates.

b) After 48 - 72 h (i.e., after cells attain 20+ % confluency [see **Section VII.C.4(h)**]) incubation of the cells, add 125 µl of the appropriate concentration of test chemical, the PC, or the VC (see **Figure 1** for the plate configuration) directly to the test wells. Do not remove Routine Culture Medium for re-feeding the cells. The dosing solutions will be rapidly transferred from the 8-channel reservoir (or dummy plate) to the test plate using a single delivery multi-channel pipettor. For example, the VC may be transferred first (into columns 1, 2, 11, and 12), followed by the test article dosing solutions from lowest to highest dose, so that the same pipette tips on the multi-channel pipettor can be used for the whole plate. [The Vehicle Control blank (VCb) wells (column 1, column 12, wells A2, A11, H2, H11) will receive the Vehicle Control dosing solutions (which should include any solvents used). Blanks for wells A3 – A10 and H3 – H10 shall receive the appropriate test chemical solution for each concentration (e.g., wells A3 and H3 receive $C_1$ solution).] Incubate cells for 48 h ± 0.5 h (37ºC ± 1ºC, 90 % ± 5 % humidity, and 5.0 % ± 1 % $CO_2$/air).

c) **Positive Control**: For each set of test chemical plates used in an assay, a separate plate of positive control concentrations will be set up following the concentration range established in the development of the positive control database in Phase I of the Validation Study. If multiple sets of test chemical plates are set up, then clearly designate the positive control plates for each set; each set will be an individual entity. The Study Director will decide how many test chemical plates will be run with a positive control plate. The mean $IC_{50}$ ± two and a half standard deviations (SD) for the SLS acceptable tests from Phases Ia, Ib, and II (after the removal of outliers) are the values that will be used as an acceptance criterion for test sensitivity for the NHK NRU assay. This plate will follow the same schedule and procedures as used for the test chemical plates (including appropriate chemical concentrations in the appropriate wells and meeting test acceptance criteria see **Sections VII.E.1, E.2, and E.5**).

**3. Microscopic Evaluation**

After at least 46 h treatment, examine each plate under a phase contrast microscope to identify systematic cell seeding errors and growth characteristics of control and treated cells. Record any changes in morphology of the cells due to the cytotoxic effects of the test chemical, but do not use these records for any quantitative measure of cytotoxicity. Undesirable growth characteristics of control cells may indicate experimental error and may be cause for rejection of the assay. Use the following Visual Observations Codes in the description of cell culture conditions. Numerical scoring of the cells (see **Section**

**VII.E.3**) should be determined and documented in the Study Workbook and in the appropriate section of Addendum II of the EXCEL® study template.

**Visual Observations Codes**

| Note Code | Note Text |
|---|---|
| | |
| 1 | Normal Cell Morphology |
| 2 | Low Level of Cell Toxicity |
| 3 | Moderate Level of Cell Toxicity |
| 4 | High level of Cell Toxicity |
| 1P | Normal Cell Morphology with Precipitate |
| 2P | Low Level of Cell Toxicity with Precipitate |
| 3P | Moderate Level of Cell Toxicity with Precipitate |
| 4P | High level of Cell Toxicity with Precipitate |
| 5P | Unable to View Cells Due to Precipitate |

**4. Measurement of NRU**

a) Carefully remove (i.e., "dump") the Routine Culture Medium (with test chemical) and rinse the cells very carefully with 250 µL pre-warmed D-PBS. Remove the rinsing solution by dumping and remove excess by gently blotting on paper towels. Add 250 µL NR medium (to all wells including the blanks) and incubate (37ºC ± 1ºC, 90 % ± 5 % humidity, and 5.0 % ± 1 % $CO_2$/air) for 3±0.1 h. Observe the cells briefly during the NR incubation (e.g., between 2 and 3 h – Study Director's discretion) for NR crystal formation. Record observations in the Study Workbook. Study Director can decide to reject the experiment if excessive NR crystallization has occurred.

b) After incubation, remove the NR medium, and carefully rinse cells with 250 µL pre-warmed D-PBS.

c) Decant and blot D-PBS from the plate. (Optionally: centrifuge the reversed plate.)

d) Add exactly 100 µL NR Desorb (ETOH/acetic acid) solution to all wells, including blanks.

e) Shake microtiter plate rapidly on a microtiter plate shaker for 20 – 45 min to extract NR from the cells and form a homogeneous solution. Plates should be protected from light by using a cover during shaking.

f) Plates should be still for at least five minutes after removal from the plate shaker (or orbital mixer). If any bubbles are observed, assure that they have been ruptured prior to reading the plate. Measure the absorption (within 60 minutes of adding NR Desorb solution) of the resulting colored solution at 540 nm ± 10 nm in a microtiter plate reader (spectrophotometer), using the blanks as a reference. [Phases Ia and Ib data show the mean OD value for the plate blanks to be 0.055 ± 0.035 for NHK cells (± 2.5 standard deviations; data from 3 labs; N = 156). Use this range as a **guide** for assessment of the blank values.] Save raw data in the Excel format as provided by the SMT.

**5. Quality Check of Assay**

a) Test Acceptance Criteria

All acceptance criteria (i.e., criteria 1, 2, and 3) must be met for a test to be acceptable.

1) The PC (SLS) $IC_{50}$ must be within two and a half (2.5) standard deviations of the historical mean established by the Test Facility (as per **VII.E.2.c**), and must meet criteria 2 and 3, and must have an $r^2$ (coefficient of determination) value calculated for the Hill model fit (i.e., from PRISM® software) ≥ 0.85.

2) The left and the right mean of the VCs do not differ by more than 15 % from the mean of all VCs.

3) At least one calculated cytotoxicity value > 0 % and ≤ 50.0 % viability and at least one calculated cytotoxicity value > 50.0 % and < 100 % viability must be present.

*Exception*: If a test has only one point between 0 and 100 % **and** the smallest dilution factor (i.e., 1.21) was used **and** all other test acceptance criteria were met, then the test will be considered acceptable.

**Stopping Rule for Insoluble Chemicals:** If the most rigorous solubility procedures have been performed and the assay cannot achieve adequate toxicity to meet the test acceptance criteria after three definitive trials, then the Study Director may end all testing for that particular chemical.

[Note: A corrected mean $OD_{540 \pm 10nm}$ of 0.205 - 1.645 for the VCs is a target range but will not be a test acceptance criterion. Range determined from Phase Ib VC OD values from 3 laboratories (mean ± 2.5 standard deviations, N = 69).]

b) Checks for Systematic Cell Seeding Errors

To check for systematic cell seeding errors, untreated VCs are placed both at the left side (row 2) and the right side (row 11 for the test plates) of the 96-well plate. Aberrations in the cell monolayer for the VCs may reflect a volatile and toxic test article present in the assay. If volatility is suspected, then proceed to **Section VII.E.6**.

Checks for cell seeding errors may also be performed by examining each plate under a phase contrast microscope to assure that cell quantity is consistent.

**6. Volatility of Test Chemicals**

Highly volatile test chemicals may generate vapors from the treatment media during the test chemical treatment incubation period. These vapors may become resorbed into the treatment medium in adjacent wells, such that culture wells nearest the highest doses may become contaminated by exposure to resorbed test article vapors. If the test chemical is

particularly toxic at the doses tested, the cross contamination may be evident as a significant reduction in viability in the vehicle control cultures (i.e., VC1) adjacent to the highest test chemical doses.

If potential test article volatility is suspected (e.g., for low density liquids) or if the initial range finder test (non-sealed plate) results show evidence of toxic effects in the control cultures (i.e., > 15 % difference in viability between VC1 [column 2] and VC2 [column 11]), then seal the subsequent test plates by the following procedure.

a) Plate Sealer Method

1) Plates and chemicals will be prepared as usual according to **Sections VII.D and VII.E**.
2) Immediately after the 96-well culture plate has been treated with the suspected volatile chemical (**Section VII.E.2.b**), apply the adhesive plate sealer (e.g., using a hand, microplate roller, etc.) directly over the culture wells. Assure that the sealer adheres to each culture well (well tops should be dry). Place the 96-well plate cover over the sealed plate and incubate the plate under specified conditions (**Section VII.E.2.b**). [Note: Do not jam the plate lid over the film to avoid deforming the sealer and causing the sealer to detach from culture wells. Loose fit of the plate lid is acceptable.]
3) At the end of the treatment period, the plate sealer should be carefully removed to avoid spillage. Continue with the NRU assay as per **Section VII.E.4**.

## F. Data Analysis

The Study Director will use good biological/scientific judgment for determining "unusable" wells that will be excluded from the data analysis and provide explanations for the removal of any data from the analysis.

A calculation of cell viability expressed as NRU is made for each concentration of the test chemical by using the mean NRU of the six replicate values (minimum of four acceptable replicates wells) per test concentration. This value is compared with the mean NRU of all VC values. Relative cell viability is then expressed as percent of untreated VC. If achievable, the eight concentrations of each chemical tested will span the range of no effect up to total inhibition of cell viability. Data from the microtiter plate reader shall be transferred to the Excel® spreadsheet template provided by the SMT. The template will automatically determine cell viability, $IC_{50}$ values by linear interpolation, and perform statistical analyses (including statistical identification of outliers). The template will also calculate the concentrations associated with 20 %, 50 %, and 80 % viability using the Hill slope and $EC_{50}$ (i.e., $IC_{50}$) from the Hill function analysis.

The Hill function analysis shall be performed using statistical software (e.g., GraphPad PRISM® 3.0) and a template specified by the SMT to calculate $IC_{20}$, $IC_{50}$, and $IC_{80}$ values (and the associated confidence limits) for each test chemical.

The Testing Facility shall report data using at least three (3) significant figures and shall forward the results from each assay to the SMT through the designated contacts in electronic format and hard copy upon completion of testing. The SMT will be directly responsible for the statistical analyses of the Validation Study data.

## VIII. REFERENCES

Clonetics Normal Human Keratinocyte Systems Instructions for Use, AA-1000-4-Rev.03/00. (http://www.clonetics.com).

Hackenberg, U. and H. Bartling. 1959. Messen und Rechnen im pharmakologischen Laboratorium mit einem speziellen Zahlensystem (WL24-System). Arch. Exp. Pathol. Pharmakol. 235: 437-463.

Triglia, D., P.T. Wegener, J. Harbell, K. Wallace, D. Matheson, and C. Shopsis. 1989. Interlaboratory validation study of the keratinocyte neutral red bioassay from Clonetics Corporation. In *Alternative Methods in Toxicology*, Volume 7. A.M. Goldberg, ed., pp. 357-365. Mary Ann Liebert, Inc., New York.

*Test Method Protocol for Solubility Determination. In Vitro* Cytotoxicity Validation Study. Phase III. August 29, 2003. Prepared by The National Toxicology Program (NTP) Interagency Center for the Evaluation of Alternative Toxicological Methods (NICEATM).

## IX. APPROVAL

_____ _____

**SPONSOR REPRESENTATIVE** **DATE**

**(Print or type name)**

_____ _____

**Testing Facility STUDY DIRECTOR** **DATE**
**(Print or type name)**

# Appendix B3

## Test Method Protocol for Solubility Determination (Phase III)

***[This Page Intentionally Left Blank]***

# TEST METHOD PROTOCOL
# for Solubility Determination

## *In Vitro* Cytotoxicity Validation Study
## Phase III

**September 24, 2003**

**Prepared by**

**The National Toxicology Program (NTP) Interagency Center for the Evaluation of Alternative Toxicological Methods (NICEATM)**

**Based on Standard Operating Procedure Recommendations from an International Workshop Organized by the Interagency Coordinating Committee on the Validation of Alternative Methods (ICCVAM)**

**National Institute of Environmental Health Sciences (NIEHS)**
**National Institutes of Health (NIH)**
**U.S. Public Health Service**
**Department of Health and Human Services**

# TEST METHOD PROTOCOL

## Solubility Determination
## Phase III

### I. PURPOSE

The purpose of this study is to evaluate the cytotoxicity of test chemicals using the BALB/c 3T3 Neutral Red Uptake (NRU) and normal human keratinocyte (NHK) cytotoxicity tests. The data will be used to evaluate the intra- and inter-laboratory reproducibility of the assay and effectiveness of the cytotoxicity assay to predict the starting doses for rodent acute oral systemic toxicity assays. This test method protocol outlines the procedures for performing solubility determinations for the *in vitro* validation study organized by NICEATM and the European Centre for the Validation of Alternative Methods (ECVAM) and sponsored by NIEHS, U.S. Environmental Protection Agency, and ECVAM. This test method protocol applies to all personnel involved with performing the solubility testing.

**A. Solubility Test**

The solubility tests will be performed to determine the best solvent to use for each of the 60 blinded/coded test chemicals to be tested in the 3T3 and NHK NRU cytotoxicity tests

### II. SPONSOR

**A.** Name: National Institute of Environmental Health Sciences (NIEHS); The National Toxicology Program (NTP) Interagency Center for the Evaluation of Alternative Toxicological Methods (NICEATM)

**B.** Address: P.O. Box 12233
Research Triangle Park, NC 27709

**C.** Representative: *Named Representative*

### III. IDENTIFICATION OF TEST SUBSTANCES AND SOLVENTS

**A.** Test Chemicals: *60 Coded Chemicals (60)*

**B.** Solvents: Chemical Dilution Medium for 3T3 assay (See **Section VII.B.1**)
Treatment Medium for NHK assay (See **Section VII.B.2**)

### IV. TESTING FACILITY AND KEY PERSONNEL

**A. Facility Information**

1) Name:
2) Address:
3) Study Director:
4) Laboratory Technician(s):
5) Scientific Advisor:
6) Quality Assurance Director:

7) Safety Manager:
8) Facility Management:

**B. Test Schedule**

1) Proposed Experimental Initiation Date:
2) Proposed Experimental Completion Date:
3) Proposed Report Date:

## V. TEST SYSTEM

The solubility test procedure is based on attempting to dissolve chemicals in various solvents with a increasingly rigorous mechanical techniques. The solvents to be used, in the order of preference, are cell culture media, DMSO, and ethanol. Solubility shall be determined in a step-wise procedure that involves attempting to dissolve a test chemical in the solvents (in the order of preference) at relatively high concentrations using the sequence of mechanical procedures (**Section VII.C.2.a**). If the chemical does not dissolve, the volume of solvent is increased so as to decrease the concentration by a factor of 10, and then the sequence of mechanical procedures are repeated in an attempt to solubilize the chemical at the lower concentrations.

Determination of whether a chemical has dissolved is based entirely on visual observation. A chemical has dissolved if the solution is clear and shows no signs of cloudiness or precipitation.

## VI. DEFINITIONS

**A**. *Soluble:* Chemical exists in a clear solution without visible cloudiness or precipitate.

**B**. *Documentation*: all methods and procedures will be noted in a Study Workbook; logs will be maintained for general laboratory procedures and equipment (e.g., media preparation, solubility testing, laboratory balance calibration); solubility reports will be in electronic and paper format; all data will be archived.

## VII. PROCEDURES

### A. Materials

#### 1. Technical Equipment

[Note: Suggested brand names/vendors are listed in parentheses. Equivalents may be used.]

a) Water bath: 37ºC ± 1ºC
b) Glass tubes with caps (e.g., 5 mL)
c) Laboratory balance
d) Pipetting aid
e) Pipettes, pipettors (multi-channel and single channel; multichannel repeater pipette), dilution block
f) Waterbath sonicator
g) Dry heat block (optional)

**2. Chemicals, Media, and Sera**

a) Dulbecco's Modification of Eagle's Medium (DMEM) without L-Glutamine; should have high glucose [4.5gm/l] (e.g., ICN-Flow Cat. No. 12-332-54)
b) L-Glutamine 200 mM (e.g., ICN-Flow # 16-801-49)
c) Penicillin/streptomycin solution (e.g. ICN-Flow # 16-700-49)
d) Dimethyl sulfoxide (DMSO), U.S.P. analytical grade (Store under nitrogen @ -20ºC)
e) Ethanol (ETOH), U.S.P. analytical grade (100 %, non-denatured for test chemical preparation; 95 % can be used for the desorb solution)
f) Keratinocyte Basal Medium without $Ca^{++}$ (KBM®, Clonetics CC-3104) that is completed by adding the KBM® SingleQuots® (Clonetics CC-4131) to achieve the proper concentrations of epidermal growth factor, insulin, hydrocortisone, antimicrobial agents, bovine pituitary extract, and calcium (e.g., Clonetics Calcium SingleQuots®, 300 mM $CaCl_2$, Clonetics # CC-4202).

**B. Preparations of Media and Solutions**

[Note: All solutions glassware, pipettes, etc., shall be sterile and all procedures should be carried out under aseptic conditions and in the sterile environment of a laminar flow cabinet (biological hazard standard). All methods and procedures will be adequately documented. Completed media formulations should be kept at approximately 2-8° C and stored for no longer than two weeks.]

**1. 3T3 Chemical Dilution Medium**

DMEM (buffered with sodium bicarbonate) supplemented with (final concentrations in DMEM are quoted):

| | |
|---|---|
| 4 mM | Glutamine |
| 200 IU/mL | Penicillin |
| 200 µg/mL | Streptomycin |

**2. NHK Treatment Medium**

KBM® (Clonetics CC-3104) supplemented with KBM® SingleQuots® (Clonetics CC-4131) and Clonetics Calcium SingleQuots® (CC-4202) to make 500 mL medium. Final concentration of supplements in medium are:

| | |
|---|---|
| 0.0001 ng/mL | Human recombinant epidermal growth factor |
| 5 µg/mL | Insulin |
| 0.5 µg/mL | Hydrocortisone |
| 30 µg/mL | Gentamicin |
| 15 ng/mL | Amphotericin B |
| 0.10 mM | Calcium |
| 30 µg/mL | Bovine pituitary extract |

NOTE:
KBM® SingleQuots® contain the following stock concentrations and volumes:

| | | |
|---|---|---|
| 0.1 ng/mL | hEGF | 0.5 mL |
| 5.0 mg/mL | Insulin | 0.5 mL |
| 0.5 mg/mL | Hydrocortisone | 0.5 mL |
| 30 mg/mL | Gentamicin, 15 ug/mL Amphotericin-B | 0.5 mL |
| 7.5 mg/mL | Bovine Pituitary Extract (BPE) | 2.0 mL |

Clonetics Calcium SingleQuots® are 2 mL of 300 mM calcium.

165 µl of solution per 500 mL calcium-free medium equals 0.10 mM calcium in the medium.

## C. Determination of Solubility

The preference of solvent for dissolving test chemicals is medium, DMSO, and then ethanol. Solubility shall be determined in a step-wise procedure that involves attempting to dissolve a test chemical at a relatively high concentration with the sequence of mechanical procedures specified in **Section VII.C.2.a.** If the chemical does not dissolve, the volume of solvent is increased so as to decrease the concentration by a factor of 10, and then the sequence of mechanical procedures in **Section VII.C.2.a** are repeated in an attempt to solubilize the chemical at the lower concentrations. For testing solubility in medium, the starting concentration is 20,000 µg/ml (i.e., 20 mg/mL) in Tier 1, but for DMSO and ethanol the starting concentration is 200,000 µg/ml (i.e., 200 mg/mL) in Tier 2. Weighing out chemical for each solvent (i.e., medium, DMSO, ethanol) can be done all at once, if convenient, but solubility testing (at each tier that calls for more than one solvent) is designed to be sequential - medium, then DMSO, then ethanol – in accordance with the solvent hierarchy (see **Figure 1**). This allows for testing to stop, rather than continue testing with less preferred solvents, if the test chemical dissolves in a more preferred solvent. For example, if a chemical is soluble in medium at a particular tier, testing may stop. Likewise, if a chemical is soluble in DMSO at any tier, testing need not continue with ethanol. However, since the issue of primary importance is testing the solvents and concentrations of test chemical required by any one tier, sequential testing of solvents may be abandoned if the lab can test more efficiently in another way.

### 1. Method

a) Tier 1 begins with testing 20 mg/mL each in Chemical Dilution Medium and Treatment Medium (see **Table 1**). For each medium, weigh approximately 10 mg (10,000 µg) of the test chemical into glass tubes. Document the chemical weight. Add approximately 0.5 mL of each medium into its respective tube so that the concentration is 20,000 µg/ml (20 mg/mL). Mix the solution as specified in **Section VII.C.2.a.** If complete solubility is achieved in each medium, then additional solubility procedures are not needed.

b) If the test chemical is insoluble in either Chemical Dilution Medium or Treatment Medium, proceed to Tier 2 by adding enough medium, approximately 4.5 mL, to attempt to dissolve the chemical at 2 mg/mL by using the sequence of mixing procedures specified in **Section VII.C.2.a**. If the test chemical dissolves in medium at 2 mg/mL, no further procedures are necessary. If the test chemical does NOT dissolve in one medium or the other (if both are tested in this tier), weigh out approximately 100 mg test chemical in a second glass tube and add enough DMSO to

make the total volume approximately 0.5 mL (for 200 mg/mL) and attempt to dissolve the chemical as specified in **Section VII.C.2.a**. If the test chemical does not dissolve in DMSO, weigh out approximately 100 mg test chemical in another glass tube and add enough ethanol to make the total volume approximately 0.5 mL (for 200 mg/mL) and attempt to dissolve the chemical as specified in **Section VII.C.2.a**. If the chemical is soluble in either solvent, no additional solubility procedures are needed.

c) If the chemical is NOT soluble in one or both media, DMSO, or ethanol at Tier 2, then continue to Tier 3 in Table 1 by adding enough solvent to increase the volume of the three (or four) Tier 2 solutions by 10 and attempt to solubilize again using the sequence of mixing procedures in **Section VII.C.2.a.** If the test chemical dissolves, no additional solubility procedures are necessary. If the test chemical does NOT dissolve, continue with Tier 4 and, if necessary, Tier 5 using DMSO and ethanol. Tier 4 begins by diluting the Tier 3 samples with DMSO or ethanol to bring the total volume to 50 mL. The mixing procedures in **Section VII.C.2.a** are again followed to attempt to solubilize the chemical. Tier 5 is performed, if necessary, by weighing out another two samples of test chemical at ~10 mg each and adding ~50 mL DMSO or ethanol for a 200 µg/mL solution, and following the mixing procedures in **Section VII.C.2.a**.

Example: If complete solubility is not achieved at 20,000 µg/mL in either Chemical Dilution Medium or Treatment Medium at Tier 1 using the mixing procedures specified in **Section VII.C.2.a,** then the procedure continues to Tier 2 by diluting the solution to 5 mL (with either of the appropriate media) and mixing again as specified in **Section VII.C.2.a.** If the chemical is not soluble in Chemical Dilution Medium or Treatment Medium, two samples of ~ 100 mg test chemical are weighed to attempt to solubilize in DMSO and ethanol at 200,000 µg/mL (i.e., 200 mg/mL). Solutions are mixed following the sequence of procedures prescribed in **Section VII.C.2.a** in an attempt to dissolve. If solubility is not achieved at Tier 2, then the solutions (Chemical Dilution Medium and/or Treatment Medium, DMSO, and ethanol) prepared in Tier 2 are diluted by 10 so as to test 200 µg/mL in media, and 20,000 µg/mL in DMSO and ethanol. This advances the procedure to Tier 3. Solutions are again mixed as prescribed in **Section VII.C.2.a** in an attempt to dissolve. If solubility is not achieved in Tier 3, the procedure continues to Tier 4, and to 5 if necessary (see **Figure 1** and **Table 1**).

**Table 1. Determination of Solubility in Chemical Dilution Medium, Treatment Medium, DMSO, or Ethanol**

| TIER | 1 | 2 | 3 | 4 | 5 |
|---|---|---|---|---|---|
| Total Volume Chemical Dilution Medium/Treatment Medium | 0.5 mL | 5 mL | 50 mL | | |
| Concentration of Test Chemical (Add ~10 mg to a tube. Add enough medium to equal the first volume. Dilute to subsequent volumes if necessary.) | 20,000 µg/mL (20 mg/mL) | 2,000 µg/mL (2 mg/mL) | 200 µg/mL (0.20 mg/mL) | | |
| Total Volume DMSO/Ethanol | | 0.5 mL | 5 mL | 50 mL | |
| Concentration of Test Chemical (Add ~100 mg to a large tube. Add enough DMSO or ethanol to equal the first volume. Dilute with subsequent volumes if necessary.) | | 200,000 µg/mL (200 mg/mL) | 20,000 µg/mL (20 mg/mL) | 2,000 µg/mL (2 mg/mL) | |
| Total Volume DMSO/Ethanol | | | | | 50 mL |
| Concentration of Test Chemical (Add ~10 mg to a large tube. Add enough DMSO or ethanol to equal 50 mL.) | | | | | 200 µg/mL (0.2 mg/mL) |
| Equivalent Concentration on Cells | 10,000 µg/mL (10 mg/mL) | 1000 µg/mL (1 mg/mL) | 100 µg/mL (0.1 mg/mL) | 10 µg/mL (0.01 mg/mL) | 1 µg/mL (0.001 mg/mL) |

[NOTE: The amounts of test chemical weighed and Chemical Dilution Medium and Treatment Medium added may be modified from the amounts given above, provided that the targeted concentrations specified for each tier are tested.]

## *Figure 1. Solubility Flow Chart*

**TIER 1**

| | |
|---|---|
| STEP 1: | 20 mg/mL test chemical (TC) in 0.5 mL Chemical Dilution Medium and Treatment Medium:<br>• if TC soluble in both media, then **STOP**.<br>• if TC insoluble in one medium, then go to STEP 2. |

**TIER 2**

| | |
|---|---|
| STEP 2: | 2 mg/mL TC in medium (one or both) – increase volume from STEP 1 by 10 (i.e., to 5 mL)<br>• if TC soluble, then **STOP**.<br>• if TC insoluble in one medium, then go to STEP 3. |
| STEP 3: | 200 mg/mL TC in DMSO<br>• if TC soluble, then **STOP**.<br>• if TC insoluble, test at 200 mg/mL in ETOH.<br>  • if TC soluble, then **STOP.**<br>  • If TC insoluble, go to STEP 4. |

**TIER 3**

| | |
|---|---|
| STEP 4: | 0.2 mg/mL TC in medium (one or both) – increase volume from STEP 2 by 10 (i.e., to 50 mL)<br>• if TC soluble in both media, then **STOP**.<br>• if TC insoluble in one medium, test at 20 mg/mL in DMSO – increase volume from STEP 3 by 10 (i.e., to 5 mL).<br>  • if TC soluble, then **STOP.**<br>  • if TC insoluble, test at 20 mg/mL in ETOH – increase volume from STEP 3 by 10 (i.e., to 5 mL).<br>  • if TC soluble, then **STOP.**<br>  • if TC insoluble, then go to STEP 5. |

**TIER 4**

| | |
|---|---|
| STEP 5: | 2 mg/mL TC in DMSO – increase volume from STEP 4 by 10 (i.e., to 50 mL)<br>• if TC soluble, then **STOP.**<br>• if TC insoluble, test at 2 mg/mL in ETOH – increase volume from STEP 4 by 10 (i.e., to 50 mL).<br>  • if TC soluble, then **STOP.**<br>  • if TC insoluble, then go to STEP 6. |

**TIER 5**

| | |
|---|---|
| STEP 6: | 0.2 mg/mL TC in 50 mL DMSO<br>• if TC soluble, then **STOP.**<br>• if TC insoluble, test at 0.2 mg/mL in 50 mL ETOH<br>  • **STOP** |

**2. Mechanical Procedures**

a) The following hierarchy of mixing procedures will be followed to dissolve the test chemical:

1) Add test chemical to solvent as in Tier 1 of **Table 1**. (Test chemical and solvent should be at room temperature.)

2) Gently mix at room temperature. Vortex the tube (1 –2 minutes).

3) If test chemical hasn't dissolved, use waterbath sonication for up to 5 minutes.

4) If test chemical is not dissolved after sonication, then warm solution to 37°C for 5 - 60 min. This can be performed by warming tubes in a 37°C water bath or in a $CO_2$ incubator at 37°C. The solution may be stirred during warming (stirring in a $CO_2$ incubator will help maintain proper pH).

5) Proceed to Tier 2 (and Tiers 3-5, if necessary of Table 1 and repeat procedures 2-4).

b) The preference of solvent for dissolving test chemicals is Chemical Dilution Medium or Treatment Medium, DMSO, and then ethanol. Thus, if all solvents for a particular tier are tested simultaneously and a test chemical dissolves in more than one solvent, then the choice of solvent follows this hierarchy. For example, if, at any tier, a chemical is soluble in Chemical Dilution Medium and DMSO, but not in Treatment Medium or ethanol, the choice of solvent would be medium for the 3T3 assay and DMSO for the NHK assay. If the chemical were insoluble in both media, but soluble in DMSO and ethanol, the choice of solvent would be DMSO for both assays.

After the lab has determined the preferred solvent for the test chemical and before proceeding to the cytotoxicity testing, the Study Director will submit the solubility test results (laboratory worksheets are preferable), and discuss the solvent selection with the Study Management Team (SMT) of the validation study. <u>The SMT will provide direction on the solvent to be used in each assay for each chemical prior to cytotoxicity testing</u>. If the laboratory has attempted all solubility testing without success, then the SMT will provide additional guidance for achieving test chemical solubility. The SMT anticipates that all validation study test chemicals will be tested in the NRU assays.

The Testing Facility shall forward the results from the solubility tests assay to the SMT through the designated contacts in electronic format and hard copy upon completion of testing. The SMT will be directly responsible for the statistical analyses of the Validation Study data.

## VIII. REFERENCES

U. S. Environmental Protection Agency. 1996. Product Properties Test Guidelines. OPPTS 803.7840. Water Solubility: Column Elution Method; Shake Flask Method. EPA712-C-96-041, Prevention, Pesticides and Toxic Substances, Washington DC.

## IX. APPROVAL

| | |
|---|---|
| _____ | _____ |
| **SPONSOR REPRESENTATIVE** | **DATE** |
| **(Print or type name)** | |
| _____ | _____ |
| **Test Facility STUDY DIRECTOR** | **DATE** |
| **(Print or type name)** | |

# Appendix B4

## Test Method Procedure for Prequalification of Normal Human Epidermal Keratinocyte Growth Medium (Phase III)

***[This Page Intentionally Left Blank]***

# TEST METHOD PROCEDURE
# Prequalification of Normal Human Epidermal Keratinocyte Growth Medium

**In Vitro Cytotoxicity Validation Study**
**Phase III**

**January 28, 2004**

**Prepared by**

**The National Toxicology Program (NTP) Interagency Center for the Evaluation of Alternative Toxicological Methods (NICEATM)**

**Based on Standard Operating Procedure Recommendations from an International Workshop Organized by the Interagency Coordinating Committee on the Validation of Alternative Methods (ICCVAM)**

**National Institute of Environmental Health Sciences (NIEHS)**
**National Institutes of Health (NIH)**
**U.S. Public Health Service**
**Department of Health and Human Services**

## I. PROPOSAL

The following document provides the guidelines and testing requirements for qualifying lots of Keratinocyte Basal Medium without $Ca^{++}$ (KBM® [CAMBREX/Clonetics # CC-3104]) and the medium supplements (SingleQuots® [CAMBREX/Clonetics # CC-4131]) for use in the normal human epidermal keratinocyte (NHK) neutral red uptake (NRU) assays for Phase III of the In Vitro Cytotoxicity Validation Study. The medium and supplements will be tested so as to demonstrate their ability to perform adequately in the NHK NRU assay prior to purchase by the validation study laboratories for use in Phase III.

The Testing Facility will request the quality control test data from CAMBREX/Clonetics for each potential lot of medium and supplements. Based upon the QC test data, the Testing Facility will purchase and test the one or two most current lots of medium and supplements in stock with CAMBREX/Clonetics that appear to have the potential to support NHK cultures according to the requirements of the In Vitro Cytotoxicity Validation Study NHK neutral red uptake assay.

This test method procedure is based on the Phase III NHK NRU protocol (IIVS Protocol No. SP100066) and outlines the procedures needed for performing the cytotoxicity test specifically for prequalifying NHK culture medium. The test method procedure and NHK NRU protocol support the *in vitro* validation study organized by NICEATM and the European Centre for the Validation of Alternative Methods (ECVAM) and sponsored by NIEHS, U.S. Environmental Protection Agency, and ECVAM. This test method procedure applies to all personnel involved with performing media/supplement testing.

### A. NHK Neutral Red Uptake Cytotoxicity Test

The NHK NRU test will be performed to analyze NHK growth characteristics and the *in vitro* toxicity of Sodium Lauryl Sulfate (SLS), as measured by the $IC_{50}$, with each NHK medium/supplement being tested.

The Testing Facility will select the lots of medium/supplements and combinations based on the maximum available quantity and shelf life, as well as growth test results provided by Cambrex. Potential medium testing/supplement combinations are:

- One lot of medium/one lot of SingleQuots®: Test the lot of medium using the lot of SingleQuots® (one test of three plates).
- Two or more lots of medium/one lot of SingleQuots®: Test each lot of medium using the one lot of SingleQuots® (one test of three plates for each lot of medium)
- One lot of medium/two or more lots of SingleQuots®: Test the lot of medium using each lot of SingleQuots® (one test of three plates for each lot of SingleQuots®).

NHK cultures will be established using each medium/supplement combination, and will be subcultured on 3 different days into 96-well plates for three subsequent SLS cytotoxicity tests using each appropriate test medium/supplement combination.

### B. Testing Conditions

The work will be performed in the IIVS Good Laboratory Practice (GLP)-compliant laboratories, but will not be performed in full compliance with national and international GLP guidelines, and neither a protocol nor an audited report will be generated.

The Study Director will provide recommendations and appropriate test data for acceptance/rejection of the tested media/supplements to the Study Management Team (SMT).

The Testing Facility will maintain the following documentation: study workbooks noting all methods and procedures; logs for general laboratory procedures and equipment (e.g., media preparation, SLS preparation, incubator function); electronic and paper formats of all optical density data obtained from the spectrophotometer plate reader; electronic and paper format of all calculations of ICx values and other derived data.

## II. SPONSOR

**A. Name**: National Institute of Environmental Health Sciences (NIEHS); The National Toxicology Program (NTP) Interagency Center for the Evaluation of Alternative Toxicological Methods (NICEATM)

**B. Address**: P.O. Box 12233
Research Triangle Park, NC 27709

**C. Representative**: Molly Vallant, Project Officer, NIEHS

**D. Study Management Team Representatives:** William Stokes, Silvia Casati, Raymond Tice, Judy Strickland, Michael Paris

## III. IDENTIFICATION OF TEST AND CONTROL SUBSTANCES

**A. Test Substances**: Keratinocyte Basal Medium without $Ca^{++}$ (KBM®, Clonetics CC-3104)

KBM® SingleQuots® (Clonetics CC-4131)

**B. Controls**: Positive: Sodium Lauryl Sulfate
Vehicle (Negative): Assay medium

## IV. TESTING FACILITY AND KEY PERSONNEL

- Name: Institute for In Vitro Sciences, Inc.
- Address: 21 Firstfield Road, Suite 220
Gaithersburg, Maryland 20878
- Study Director: Hans Raabe, M.S.
- Laboratory Technician(s): Greg Mun, B.A., Laboratory Manager
Robin Anderson, B.S.
Filomena Diaco, B.S.
Gregory Moyer, B.S.
Massod Rahimi, B.S.
Angela Sizemore, B.S.
Teri Beth Wallace, B.S.

Nathan Wilt, B.S.

## V. PROCEDURES

### A. Materials

NHK cells used for this procedure will come from the same lot of NHK cells used in Phases I and II of the validation study. Equipment, chemicals, and other media will be the same as in IIVS Protocol No. SP100066.

### B. Preparations of Media and Solutions

All media and solutions will be prepared as in IIVS Protocol No. SP100066.

### C. Methods

All culture procedures will be performed as in IIVS Protocol No. SP100066..

NHK cultures will be established with cryopreserved cells seeded into individual tissue culture flasks using the existing medium/supplement combination (the "control" medium) and each test medium/supplement combination. It may be acceptable to suspend freshly-thawed cells initially into 9 mL of control medium. The cell suspension will then be added to culture flasks containing pre-warmed control or test medium. The cells will be subcultured on three different days into 96-well plates for three subsequent NRU tests using each appropriate test medium/ supplement combination and control.

### D. Preparation of SLS

The preparation of SLS (IIVS code 02AD92) will follow the procedures in Sections VII.D.1.a, b, and d of IIVS Protocol No. SP100066. SLS will be dissolved only in Routine Culture Medium. Determination of the pH will follow Section VII.D.2.

Preparation of SLS concentrations/dilutions will follow the main experiment procedures specifically for testing compounds in Routine Culture Medium as outlined in Section VII.D.3.b of IIVS Protocol No. SP100066. The concentrations/dilutions should be the same or similar to those used for SLS as a positive control in Phase II of the validation study.

### E. Test Procedure

The 96-well plate configuration will be the same as that outlined in Section VII.E.1 of IIVS Protocol No. SP100066. The $C_1$ test concentration will be the highest SLS concentration. Application of the SLS, subsequent toxicity testing, and measurement of NRU will follow procedures outlined in Sections VII.E.2.a and b and Section VII.4 of IIVS Protocol No. SP100066.

Cells cultured in control medium and in each test medium/supplement combination will be tested in parallel for their sensitivity to SLS.

### F. Microscopic Evaluation

Observations of the cell cultures in the culture flasks, as well as in the 96-well plates will be performed and documented and should include cell morphology (e.g., overall appearance, colony formation and proliferation, presence of mitotic figures, and distribution). Representative observations of the cultures in the culture flasks will be performed every working day. Representative observations of the cultures in the 96-well plates will be performed daily prior to treatment with SLS; at the end of the 48 hour treatment incubation;

and during the neutral red incubation period (to evaluate relative neutral red uptake in the vehicle control cultures).

Changes in morphology of the cells due to cytotoxic effects of the SLS (prior to measurement of NRU) should be recorded as per procedures outlined in Section VII.E.3 of IIVS Protocol No. SP100066.

### G. Data Analysis and Test Evaluation

Data analysis will be performed as in Section VII.F of IIVS Protocol No. SP100066. The following parameters will be evaluated to determine whether the NHK media and supplements are adequate to support the NHK NRU assay:

1) SLS $IC_{50}$

2) $r^2$ (coefficient of determination) value calculated for the Hill model fit (i.e., from PRISM® software.

3) Difference between the mean of all vehicle controls (VC) and (a) the left mean VC, and (b) the right mean VC.

4) Number of points between 0 % and 50.0 % viability and between 50.0 % 100 % viability.

5) Mean corrected $OD_{540\text{-}550}$ of the VCs.

6) Cell morphology and confluence of the VCs at the end of the 48 h treatment

The Study Director will utilize all observed growth characteristics and test results to determine whether the media/supplements perform adequately, and provide the test data and a recommendation for the use or rejection of the media/supplements to the SMT. IIVS will request CAMBREX/Clonetics reserve a portion of an acceptable lot based on estimates of media needed by the three laboratories.

## V. REFERENCES

IIVS Protocol No. SP100066. Test Method Protocol for the NHK Neutral Red Uptake Cytotoxicity Test. A Test for Basal Cytotoxicity for an In Vitro Validation Study. November 11, 2003. Prepared by the National Toxicology Program (NTP) Interagency Center for the Evaluation of Alternative Toxicological Methods (NICEATM).

## VI. APPROVAL

_____ _____

**SPONSOR REPRESENTATIVE** **DATE**

**(Print or type name)**

_____ _____

**Testing Facility STUDY DIRECTOR** **DATE**
**(Print or type name)**

***[This Page Intentionally Left Blank]***

# Appendix C

## Validation Study Test Method Protocols
## (Phases Ia, Ib, and II)

**C1 Test Method Protocol for the BALB/c 3T3 Neutral Red Uptake Cytotoxicity Test (Phase Ia) ..... C-3**

**C2 Test Method Protocol for the Normal Human Epidermal Keratinocyte (NHK) Neutral Red Uptake Cytotoxicity Test (Phase Ia) ..... C-23**

**C3 Test Method Protocol for the BALB/c 3T3 Neutral Red Uptake Cytotoxicity Test (Phase Ib) ..... C-41**

**C4 Test Method Protocol for the Normal Human Epidermal Keratinocyte (NHK) Neutral Red Uptake Cytotoxicity Test (Phase Ib) ..... C-63**

**C5 Test Method Protocol for the BALB/c 3T3 Neutral Red Uptake Cytotoxicity Test (Phase II) ..... C-85**

**C6 Test Method Protocol for the Normal Human Epidermal Keratinocyte (NHK) Neutral Red Uptake Cytotoxicity Test (Phase II) ..... C-109**

***[This Page Intentionally Left Blank]***

# Appendix C1

## Test Method Protocol for the BALB/c 3T3 Neutral Red Uptake Cytotoxicity Test (Phase Ia)

***[This Page Intentionally Left Blank]***

# TEST METHOD PROTOCOL
# for the BALB/c 3T3 Neutral Red Uptake Cytotoxicity Test

**A Test for Basal Cytotoxicity for an *In Vitro* Validation Study**

**June 14, 2002**

**Prepared by**

**The National Toxicology Program (NTP) Interagency Center for the Evaluation of Alternative Toxicological Methods (NICEATM)**

**Based on Standard Operating Procedure Recommendations from an International Workshop Organized by the Interagency Coordinating Committee on the Validation of Alternative Methods (ICCVAM)**

**National Institute of Environmental Health Sciences (NIEHS)**
**National Institutes of Health (NIH)**
**U.S. Public Health Service**
**Department of Health and Human Services**

# TEST METHOD PROTOCOL

## The BALB/c 3T3 Neutral Red Uptake Cytotoxicity Test
## A Test for Basal Cytotoxicity

## I. PURPOSE

The purpose of this study is to evaluate the cytotoxicity of test chemicals using the BALB/c 3T3 Neutral Red Uptake (NRU) cytotoxicity test. The data will be used to evaluate the intra- and inter-laboratory reproducibility of the assay and effectiveness of the cytotoxicity assay to predict the starting doses for rodent acute oral systemic toxicity assays. This test method protocol outlines the procedures for performing the cytotoxicity test and supports the *in vitro* validation study organized by NICEATM and the European Centre for the Validation of Alternative Methods (ECVAM) and sponsored by NIEHS, U.S. Environmental Protection Agency, and ECVAM. This test method protocol applies to all personnel involved with performing the cytotoxicity assay.

### A. Determination of Positive Control Database

An historical database of $IC_{50}$ values for the positive control chemical (Sodium Lauryl [dodecyl] Sulfate {SLS}) must be established and maintained by performing 10 concentration-response assays on the 3T3 cells before performing the NRU assay on test chemicals. Once the mean $IC_{50}$ and the 95 % confidence interval (CI) of the $IC_{50}$ of SLS are established, the values will be used as an acceptance criterion for test sensitivity for the 3T3 NRU assay.

### B. BALB/c 3T3 Neutral Red Uptake Cytotoxicity Test

After acceptable positive control mean $IC_{50}$ and 95 % CI values have been established, the 3T3 NRU test will be performed to analyze the *in vitro* toxicity of test chemicals. This test will be used to determine $IC_{20}$, $IC_{50}$, and $IC_{80}$ values for a predetermined set of test chemicals of varying toxicities.

## II. SPONSOR

**A.** Name: National Institute of Environmental Health Sciences (NIEHS); The National Toxicology Program (NTP) Interagency Center for the Evaluation of Alternative Toxicological Methods (NICEATM)

**B.** Address: P.O. Box 12233
Research Triangle Park, NC 27709

**C.** Representative: *Named Representative*

## III. IDENTIFICATION OF TEST AND CONTROL SUBSTANCES

**A.** Test Chemicals: *Blinded Chemicals*

**B.** Controls:

| | |
|---|---|
| Positive: | Sodium Lauryl Sulfate |
| Vehicle (Negative): | Assay medium |
| Solvent (as needed): | Assay medium with appropriate solvent used to prepare the test chemicals (**Section VII.E**) |

## IV. TESTING FACILITY AND KEY PERSONNEL

- Name:
- Address:
- Study Director:
- Laboratory Technician(s):
- Scientific Advisor:
- Quality Assurance Director:
- Safety Manager:
- Facility Management:

### A. Test Schedule

- Proposed Experimental Initiation Date:
- Proposed Experimental Completion Date:
- Proposed Report Date:

## V. TEST SYSTEM

The NRU cytotoxicity assay procedure is a cell survival/viability chemosensitivity assay based on the ability of viable cells to incorporate and bind neutral red (NR), a supravital dye. NR is a weak cationic dye that readily penetrates cell membranes by non-ionic diffusion and accumulates intracellularly in lysosomes. Alterations of the cell surface or the sensitive lysosomal membrane lead to lysosomal fragility and other changes that gradually become irreversible. Such changes brought about by the action of xenobiotics result in a decreased uptake and binding of NR. It is thus possible to distinguish between viable, damaged, or dead cells, which is the basis of this assay.

Healthy mammalian cells, when maintained in culture, continuously divide and multiply over time. A toxic chemical, regardless of site or mechanism of action, will interfere with this process and result in a reduction of the growth rate as reflected by cell number. Cytotoxicity is expressed

as a concentration dependent reduction of the uptake of the NR after chemical exposure thus providing a sensitive, integrated signal of both cell integrity and growth inhibition.

## VI. DEFINITIONS

**A.** *Hill function*: a four parameter logistic mathematical model relating the concentration of test chemical to the response being measured in a sigmoidal shape.

$$Y = \text{Bottom} + \frac{\text{Top} - \text{Bottom}}{1 + 10^{(\log IC50 - X)\text{HillSlope}}}$$

where Y= response, X is the logarithm of dose (or concentration), Bottom is the minimum response, Top is the maximum response, logIC50 is logarithm of X at the response midway between Top and Bottom, and HillSlope describes the steepness of the curve.

**B**. *Documentation*: all methods and procedures will be noted in a Study Workbook; logs will be maintained for general laboratory procedures and equipment (e.g., media preparation, test chemical preparation, incubator function); all optical density data obtained from the spectrophotometer plate reader will be saved in electronic and paper formats; all calculations of ICx values and other derived data will be in electronic and paper format; all data will be archived.

## VII. PROCEDURES

### A. Materials

#### 1. Cell Lines

BALB/c 3T3 cells, clone 31
CCL-163, LGC Reference Materials, Customer Service, Queens Road, Teddington, Middlesex, TW110LY, UK
CCL-163, American Type Culture Collection [ATCC], Manassas, VA, USA)

#### 2. Technical Equipment

[Note: Suggested brand names/vendors are listed in parentheses. Equivalents may be used.]

a) Incubator: 37ºC ± 1ºC, 90 % ± 5 % humidity, 5.0 % ± 1 % $CO_2$/air
b) Laminar flow clean bench/cabinet (standard: "biological hazard")
c) Water bath: 37ºC ± 1ºC
d) Inverse phase contrast microscope
e) Sterile glass tubes with caps (e.g., 5 ml)
f) Centrifuge (optionally: equipped with microtiter plate rotor)
g) Laboratory balance
h) 96-well plate spectrophotometer (i.e., plate reader) equipped with 540 nm ± 10 nm filter
i) Shaker for microtiter plates
j) Cell counter or hemocytometer

k) Pipetting aid
l) Pipettes, pipettors (multi-channel and single channel), dilution block
m) Cryotubes
n) Tissue culture flasks (e.g., 75 - 80 $cm^2$, 25 $cm^2$)
o) 96-well flat bottom tissue culture microtiter plates (e.g., Nunc # 167 008; Falcon tissue culture-treated)
p) pH paper (wide and narrow range)

[Note: Tissue culture flasks and microtiter plates should be prescreened to ensure that they adequately support the growth of 3T3 cells.]

**3. Chemicals, Media, and Sera**

a) Dulbecco's Modification of Eagle's Medium (DMEM) without L-Glutamine; should have high glucose [4.5gm/l] (e.g., ICN-Flow Cat. No. 12-332-54)
b) L-Glutamine 200 mM (e.g., ICN-Flow # 16-801-49)
c) New Born Calf Serum (NBCS or NCS) (e.g., Biochrom # SO 125)
d) 0.05 % Trypsin/0.02 % EDTA solution (e.g., SIGMA T 3924, ICN-Flow, # 16891-49)
e) Phosphate buffered saline (PBS) without $Ca^{2+}$ and $Mg^{2+}$(for trypsinization)
f) Hanks' Balanced Salt Solution (HBSS) without $Ca^{2+}$ and $Mg^{2+}$(CMF-HBSS)
g) Dulbecco's Phosphate Buffered Saline (D-PBS) with glucose) formulation containing calcium and magnesium cations, and supplemented with 1000mg/L glucose) (for rinsing)
h) Penicillin/streptomycin solution (e.g. ICN-Flow # 16-700-49)
i) Neutral Red (NR) Dye – tissue culture-grade; liquid form (e.g., SIGMA N 2889); powder form (e.g., SIGMA N 4638)
j) Dimethyl sulfoxide (DMSO), U.S.P. analytical grade (Store under nitrogen @ -20ºC)
k) Ethanol (ETOH), U.S.P. analytical grade (100 %, non-denatured for test chemical preparation; 95 % can be used for the desorb solution)
l) Glacial acetic acid, analytical grade
m) Distilled $H_2O$ or any purified water suitable for cell culture (sterile)
n) Sterile paper towels (for blotting 96-well plates)

[Note: Due to lot variability of NBCS/NCS, first check a lot for growth stimulating properties with 3T3 cells (approximately 20-24 h doubling time) and then reserve a sufficient amount of NBCS/NCS.]

**B. Preparations of Media and Solutions**

[Note: All solutions (except NR stock solution, NR medium and NR desorb), glassware, pipettes, etc., shall be sterile and all procedures should be carried out under aseptic conditions and in the sterile environment of a laminar flow cabinet (biological hazard standard). All methods and procedures will be adequately documented.]

**1. Media**

DMEM (buffered with sodium bicarbonate) supplemented with (final concentrations in DMEM are quoted):

a) for freezing (Freeze Medium); contains 2X concentration of NBCS/NCS and DMSO of final freezing solution

| | |
|---|---|
| 40 % | NBCS/NCS |
| 20 % | DMSO |

b) for routine culture (Routine Culture Medium)

| | |
|---|---|
| 10 % | NBCS/NCS |
| 4 mM | Glutamine |

c) for treatment with Test Chemicals (Treatment Medium)

| | |
|---|---|
| 5 % | NBCS/NCS |
| 4 mM | Glutamine |
| 100 IU | Penicillin |
| 100 µg/ml | Streptomycin |

[Note: The serum concentration of treatment medium is reduced to 5 %, since serum proteins may mask the toxicity of the test substance. Serum cannot be totally excluded because cell growth is markedly reduced in its absence.]

Complete media should be kept at approximately 4° C and stored for no longer than two weeks.

**2. Neutral Red (NR) Stock Solution**

The liquid tissue culture-grade stock NR Solution will be the first choice for performing the assay. If the liquid form is not available, the following formulation can be prepared.

0.4 g NR Dye powder in 100 ml of $H_2O$

Make up prior to use and store dark at room temperature. May store for up to two months.

**3. Neutral Red (NR) Medium**

EXAMPLE:

| | |
|---|---|
| 1 ml (4mg NR dye/ml) | NR Stock Solution |
| 79 ml | DMEM |

The final concentration of the NR Medium is 50 µg NR dye/ml.
[Note: The NR medium should be incubated overnight at 37ºC ± 1ºC and centrifuged at approximately 600 x g for 10 min (to remove NR crystals) before adding to the cells. Alternative procedures (e.g., Millipore filtering) can be used as long as they guarantee that NR medium is free of crystals.]

**4. Ethanol/Acetic Acid Solution (NR Desorb)**

| | |
|---|---|
| 1 % | Glacial acetic acid solution |
| 50 % | Ethanol |
| 49 % | $H_2O$ |

## C. Methods

### 1. Cell Maintenance and Culture Procedures

BALB/c 3T3 cells are routinely grown as a monolayer in tissue culture grade flasks (e.g., 75 - 80 $cm^2$) at 37ºC ± 1ºC, 90 % ± 5 % humidity, and 5.0 % ± 1 % $CO_2$/air. The cells should be examined on a daily basis under a phase contrast microscope, and any changes in morphology or their adhesive properties noted in a Study Workbook (see **Section VII.F.3**).

### 2. Receipt of Cryopreserved BALB/c 3T3 Cells

Upon receipt of cryopreserved BALB/c 3T3 cells, the vial(s) of cells shall be stored in a liquid nitrogen freezer until needed.

### 3. Thawing Cells

Thaw cells by putting ampules into a water bath at 37°C ± 1ºC. Leave for as brief a time as possible.

a) Resuspend the cells and transfer into Routine Culture Medium in a tissue-culture flask (see **Section 6**).
b) Incubate at 37ºC ± 1ºC, 90 % ± 5 % humidity, and 5.0 % ± 1 % $CO_2$/air.
c) When the cells have attached to the bottom of the flask (this may take up to 4 h), decant the supernatant and replace with fresh medium. Culture as described above.
d) Passage two to three times before using the cells in a cytotoxicity test.

A fresh batch of frozen cells from the stock lot of cells should be thawed out and cultured approximately every two months. This period resembles a sequence of about 18 passages.

### 4. Routine Culture of BALB/C 3T3 Cells

When cells exceed 50 % confluence (but less than 80 % confluent) they should be removed from the flask by trypsinization:

a) Decant medium, rinse cultures with 5 ml PBS or Hanks' BSS (<u>without $Ca^{2+}$, $Mg^{2+}$</u>) per 25 $cm^2$ flask (15 ml per 75 $cm^2$ flask). Wash cells by gentle agitation to remove any remaining serum that might inhibit the action of the trypsin.
b) Discard the washing solution.
c) Add 1-2 ml trypsin-EDTA solution per 25 $cm^2$ to the monolayer for a few seconds (e.g., 15-30 seconds).
d) Remove excess trypsin-EDTA solution and incubate the cells at room temperature.
e) After 2-3 minutes (min), lightly tap the flask to detach the cells into a single cell suspension.

### 5. Cell Counting

After detaching the cells, add 0.1-0.2 ml of Routine Culture Medium/$cm^2$ to the flask (e.g., 2.5 ml for a 25 $cm^2$ flask). Disperse the monolayer by gentle trituration. It is

important to obtain a single cell suspension for exact counting. Count a sample of the cell suspension obtained using a hemocytometer or cell counter (e.g., Coulter counter).

**6. Subculture of Cells**

After determination of cell number, the culture can be sub-cultured into other flasks or seeded into 96-well microtiter plates. BALB/c 3T3 cells are routinely passaged at suggested cell densities as listed in the table (approximate doubling time is 20-24 h). The individual laboratories will need to determine and adjust the final density to achieve growth as outlined in **Section VII.C.1**.

**Table 1. Cell Densities for Subculturing**

| Days in Culture | Seeding Density (cells/cm$^2$) | Total Cells per 25 cm$^2$ flask | Total Cells per 75 cm$^2$ flask |
|---|---|---|---|
| 2 | 16800 | $4.2 \times 10^5$ | $1.26 \times 10^6$ |
| 3 | 8400 | $2.1 \times 10^5$ | $6.3 \times 10^5$ |
| 4 | 4200 | $1.05 \times 10^5$ | $3.15 \times 10^5$ |

[Note: It is important that cells have overcome the lag growth phase when they are used for the test.]

**7. Freezing Cells**

Stocks of BALB/c 3T3 cells can be stored in sterile, freezing tubes in a liquid nitrogen freezer. DMSO is used as a cryoprotective agent.

a) Centrifuge trypsinized cells at approximately 200 x g.
b) Suspend the cells in cold Routine Medium (half the final freezing volume) so a final concentration of $1\text{-}5 \times 10^6$ cells/ml can be attained.
c) Slowly add cold Freeze Medium to the cells so that the solvent will equilibrate across the cell membranes. Bring the cell suspension to the final freezing volume. The final cell suspension will be 10 % DMSO. Aliquot the cell suspension into freezing tubes and fill to 1.8 ml.
d) Place the tubes into an insulated container (e.g., styrofoam trays) and place in a freezer (-70 to -80°C) for 24 h. This gives a freezing rate of approximately 1°C/min. The laboratory needs to ensure that the freezing protocol is applicable to the 3T3 cells and that the cells are viable when removed from cryopreservation.
e) Place the frozen tubes into liquid nitrogen for storage.

**8. Preparation of Cells for Assays**

a) Cultured cells that are going to be used in seeding the 96-well plates should be fed fresh medium the day before subculturing to the plates. On the day of plate seeding, prepare a cell suspension of $2.5 \times 10^4$ cells/ml in Routine Culture Medium. Using a multi-channel pipette, dispense 100 µl Routine Culture Medium only into the peripheral wells (blanks) of a 96-well tissue culture microtiter plate (See **Section IV.F**). In the remaining wells, dispense 100 µl of a cell suspension of $2.5 \times 10^4$

cells/ml (= $2.5x10^3$ cells/well). The seeding density should be noted to ensure that the cells in the control wells are not overgrown after three days (i.e., 24 h incubation in **b** and 48 h exposure to test chemicals). Prepare one plate per chemical to be tested.

b) Incubate cells for 24 h (37ºC ± 1ºC, 90 % ± 5 % humidity, 5.0 % ± 1 % $CO_2$/air) so that cells form a less than half confluent monolayer. This incubation period assures cell recovery and adherence and progression to exponential growth phase.

c) Examine each plate under a phase contrast microscope to assure that cell growth is relatively even across the microtiter plate. This check is performed to identify experimental and systemic cell seeding errors. Record observations in the Study Workbook.

**9. Determination of Doubling Time**

a) Establish cells in culture and trypsinize cells as per **Section C.4** for subculture. Resuspend cells in about 5ml Treatment Medium (5 % NBCS/NCS). Seed cells at 4200 cells/$cm^2$.

b) Seed five sets of cell culture vessels in triplicate for each cell type (e.g., 15 tissue culture dishes [60mm x 15mm]). Use appropriate volume of culture medium for the culture vessels. Note number of cells placed into each culture dish. Place dishes into the incubators (37ºC ± 1ºC, 90 % ± 5 % humidity, 5.0 % ± 1 % $CO_2$/air).

c) After 4 - 6 hours (use the same initial measurement time for each subsequent doubling time experiment), remove three culture dishes and trypsinize cells. Count cells using a cell counter or hemocytometer. Cell viability may be determined by dye exclusion (e.g., Trypan Blue) if Study Director sees a need. Use appropriate size exclusion limits if using a Coulter counter. Determine the total number of cells and document. Repeat sampling at 24 h, 48 h, 72 h, and 96 h post inoculation. Change culture medium at 72 h or sooner in remaining dishes if indicated by pH drop.

d) Plot cell concentration (per ml of medium) on a log scale against time on a linear scale. Determine lag time and population doubling time. Additional dishes and time are needed if the entire growth curve is to be determined (lag phase, log phase, plateau phase).

## D. Establishing the Positive Control Database

An historical database of $IC_{50}$ values for the positive control chemical (Sodium Lauryl [dodecyl] Sulfate {SLS}) must be established and maintained by performing 10 concentration-response assays on the 3T3 cells.

**1. Positive Control Chemical Preparation**

The positive control chemical (SLS) is prepared in the same manner as the test chemical (**Sections E.1 and E.2**) by following the instructions and substituting "test chemical" with "SLS."

**2. Range Finder Experiment**

Before initiating the 10 concentration-response assays, a range finder experiment will be performed using <u>eight</u> concentrations of SLS by diluting the stock solution with a constant factor as per **Sections E.3.a** and **E.3.b**. The eight chemical concentrations will

be tested as per the test procedure outlined in **Section F** and analyzed as per procedures outlined in **Section G**.

### 3. Test Procedure

Once a range has been determined that satisfies the criteria in **Section E.3.b**, the definitive concentration-response assays shall use a $\sqrt[6]{10} = 1.47$ dilution scheme centered on the $IC_{50}$. The Test Facility will perform two tests per day on five different days. The 95 % CI of the $IC_{50}$ of SLS will be established and defined as an acceptance criterion for test sensitivity for the 3T3 NRU assay. The confidence intervals shall be calculated using the average of the individual $IC_{50}$ values from each positive control assay performed. An example of an historical mean $IC_{50}$ of SLS in mammalian cultures is **93 µg/ml** and the 95 % CI is **70 - 116 µg/ml** (Spielmann et. al., 1991). All testing will follow the instructions in **Section F** using the 96-well plate configuration in Figure 1. The test meets acceptance criteria if the conditions in **Sections F.5.a.2** and **F.5.a.3** are met.

***Figure 1. 96-Well Plate Configuration for Positive Control and Test Chemical Assays***

| | 1 | 2 | 3 | 4 | 5 | 6 | 7 | 8 | 9 | 10 | 11 | 12 |
|---|---|---|---|---|---|---|---|---|---|---|---|---|
| A | b | b | b | b | b | b | b | b | b | b | b | b |
| B | b | VC | $C_1$ | $C_2$ | $C_3$ | $C_4$ | $C_5$ | $C_6$ | $C_7$ | $C_8$ | VC | b |
| C | b | VC | $C_1$ | $C_2$ | $C_3$ | $C_4$ | $C_5$ | $C_6$ | $C_7$ | $C_8$ | VC | b |
| D | b | VC | $C_1$ | $C_2$ | $C_3$ | $C_4$ | $C_5$ | $C_6$ | $C_7$ | $C_8$ | VC | b |
| E | b | VC | $C_1$ | $C_2$ | $C_3$ | $C_4$ | $C_5$ | $C_6$ | $C_7$ | $C_8$ | VC | b |
| F | b | VC | $C_1$ | $C_2$ | $C_3$ | $C_4$ | $C_5$ | $C_6$ | $C_7$ | $C_8$ | VC | b |
| G | b | VC | $C_1$ | $C_2$ | $C_3$ | $C_4$ | $C_5$ | $C_6$ | $C_7$ | $C_8$ | VC | b |
| H | b | b | b | b | b | b | b | b | b | b | b | b |

VC = untreated VEHICLE CONTROL (mean viability set to 100 %)
$C_1 – C_8$ = Test Chemicals or Positive Control (SLS) at eight concentrations (C1 = highest, C8 = lowest)
b = BLANKS (contain **no** cells)

## E. Preparation of Test Chemicals

[Note: Test chemical must be freshly prepared immediately prior to use. Each stock dilution should have at least 1-2 ml total volume to ensure adequate solution for the test wells in a single 96-well plate. The solutions must not be cloudy nor have noticeable precipitate. Test chemicals must be at room temperature before dissolving and diluting. Preparation under red or yellow light may be necessary, if rapid photodegradation is likely to occur.]

**1. Dissolving Test Chemical**

a) Approximately 200,000 µg (200 mg) of the test chemical will be weighed into a glass tube and the weight will be documented. Assay-specific culture medium will be added to the vessel so that the concentration is 2,000,000 µg/ml (2000 mg/ml) and mixed using the mixing procedures outlined in **Section E.1.c**. If complete solubility is achieved, then additional solubility procedures are not needed. The test chemical can then be prepared and diluted for use in an assay. If only partial solubility is achieved, then add additional medium in the steps outlined in Table 1 until the concentration is a minimum of 200,000 µg /ml. If complete solubility at 200,000 µg/ml in culture medium can't be attained, then repeat the solubility steps in Table 1 using the other solvent(s) in the solubility hierarchy outlined in **Section E.1.c**. Test chemicals that are only soluble in DMSO or ethanol will be prepared at 2,000,000 µg/ml as the highest concentration of stock solution.

**Table 2 Determination of Solubility**

| Solubility Data | Step 1 | Step 2 | Step 3 |
|---|---|---|---|
| Total volume of medium added (ml) | 0.1 | 0.5 | 1.0 |
| Total volume of DMSO or ethanol added (ml) | 0.1 | 0.5 | 1.0 |
| Approximate solubility (µg/ml) | ≥ 2,000,000 | 400,000 | 200,000 |

Example: If complete solubility is not achieved in 0.1 ml medium (Step 1), then 0.4 ml must be added to obtain a total volume of 0.5 ml (Step 2). No additional weighing of chemical is needed. Chemical and medium are again mixed in an attempt to dissolve.

b) Each test chemical will be prepared such that the highest test concentration applied to the cells in each range finding experiment is 100,000 µg/ml in culture medium (10,000 µg/ml if DMSO or ethanol is used). If 100,000 µg/ml in culture medium cannot be achieved, then the highest concentration attainable will be used. If the range finding experiment shows that 10,000 µg/ml is not high enough for the range of chemicals dissolved in DMSO or ethanol to meet the acceptance criteria, then higher concentrations will be used for the definitive experiment.

c) The following mixing and solvent hierarchy will be followed in dissolving the test chemical:

1) Dissolve test chemical in Treatment Medium.
2) Gently mix. Vortex the tube (1 – 2 minutes).
3) If test chemical hasn't dissolved, use sonication for up to 5 minutes.
4) If sonication doesn't work, then warm solution to 37°C.

If the test chemical doesn't dissolve (i.e., solution is cloudy or has precipitate) in the Treatment Medium, then follow the steps 1) through 4) using DMSO instead of Treatment Medium.

If the test chemical doesn't dissolve in DMSO, then follow steps 1) through 4) using ethanol instead of DMSO.

d) For the range finding experiments, the highest 2x concentration of test chemical dissolved only in culture medium will be 200,000 µg/ml (200 mg/ml). The highest 2x concentration of test chemical first dissolved in DMSO or ethanol then transferred to culture medium will be 20,000 µg/ml (20 mg/ml). Dissolve test chemical in appropriate medium/solvent (at 200-fold the desired final test concentration in the case of DMSO or ethanol solvents, i.e., 20,000µg/ml). The final solvent (DMSO or ethanol) concentration for application to the cells should be kept at a constant level of 0.5 % (v/v) in the vehicle controls and in all of the eight test concentrations. The following example illustrates the preparation of test chemical in solvent and the dilution of dissolved test chemical in medium before application to 3T3 cells.

<u>Example: Preparation of Test Chemical in Solvent Using a Log Dilution Scheme</u>

1) Label eight tubes 1 – 8. Add 0.9 ml solvent (e.g., DMSO or ethanol) to tubes 2 -- 8.
2) Prepare stock solution of 2,000,000 µg test chemical/ml solvent in tube # 1.
3) Add 0.1 ml of 2,000,000 µg/ml dilution from tube #1 to tube #2 to make a 1:10 dilution in solvent (i.e., 200,000 µg/ml).
4) Add 0.1 ml of 200,000 µg/ml dilution from tube #2 to tube #3 to make another 1:10 dilution (i.e., 1:100 dilution from stock solution) in solvent (i.e., 20,000 µg/ml)
5) Continuing making serial 1:10 dilutions in the prepared solvent tubes.
6) Since each concentration is 200 fold greater than the concentration to be tested, dilute 1 part dissolved chemical in each tube with 99 parts of culture medium (e.g., 0.1 ml of test chemical in DMSO + 9.9 ml culture medium) to derive the 8 2x concentrations for application to 3T3 cells. Each test chemical concentration will then contain 1 % v/v solvent. The 3T3 cells will have 0.05 ml Treatment Medium in the wells prior to application of the test chemical. By adding 0.05 ml of the appropriate 2x test chemical concentration to the appropriate wells, the test chemical will be diluted appropriately (e.g., highest concentration in well will be 10,000 µg/ml) in a total of 0.100 ml and the solvent concentration in the wells will be 0.5% v/v.

Check carefully to determine whether the chemical is still dissolved after the transfer from solvent stock solution to medium, and reduce the highest test concentration, if necessary. Document all test chemical preparations in the Study Workbook.

**2. pH of Test Chemical Solutions**

Measure the pH of the highest concentration of the test chemical in culture medium using pH paper. Document the pH and note the color of the medium for all dilutions. Do not adjust the pH.

**3. Concentrations of Test Chemical**

a) Range Finder Experiment

Test eight concentrations of the test chemical/PC by diluting the stock solution with a constant factor covering a large range. The initial dilution series shall be log dilutions (e.g., 1:10, 1:100, 1:1000, etc.).

b) Main Experiment

Depending on the slope of the concentration-response curve estimated from the range finder, the dilution/progression factor in the concentration series of the main experiment should be smaller (e.g., $\sqrt[6]{10} = 1.47$; NOTE: this dilution factor will be used for the definitive positive control assays [**Section VII.D.3**]). Cover the relevant concentration range (≥10 % and ≤ 90 % effect) with at least three points of a graded effect, avoiding too many non-cytotoxic and/or 100 %-cytotoxic concentrations. Experiments revealing less than three cytotoxic concentrations in the relevant range shall be repeated, where possible, with a smaller dilution factor. (Taking into account pipetting errors, a progression factor of 1.21 is regarded the smallest factor achievable.)

c) Test Chemical Dilutions

- A factor of $\sqrt[2]{10} = 3.16$ could be used for covering a large range: (e.g., 1 ⇒3.16 ⇒10 ⇒31.6 ⇒100 ⇒316 ⇒1000 ⇒3160 µg/ml).
- The simplest geometric concentration series (i.e., constant dilution / progression factor) are dual geometric series (e.g., a factor of 2). These series have the disadvantage of numerical values that permanently change between logs of the series: (e.g., *log0*-2, 4, 8; *log1*- 16, 32, 64; *log2*- 128, 256, 512; *log3*- 1024, 2048,).
- The decimal geometric series, first described by Hackenberg and Bartling (1959) for use in toxicological and pharmacological studies, has the advantage that independent experiments with wide or narrow dose factors can be easily compared because they share identical concentrations. Furthermore, under certain circumstances, experiments can even be merged together:

EXAMPLE:

| | | | | | | | | | | | | |
|---|---|---|---|---|---|---|---|---|---|---|---|---|
| 10 | | | | | | 31.6 | | | | | | 100 |
| 10 | | | | 21.5 | | | | 46.4 | | | | 100 |
| 10 | | 14.7 | | 21.5 | | 31.6 | | 46.4 | | 68.1 | | 100 |
| 10 | 12.1 | 14.7 | 17.8 | 21.5 | 26.1 | 31.6 | 38.3 | 46.4 | 56.2 | 68.1 | 82.5 | 100 |

The dosing factor of 3.16 (= $\sqrt[2]{10}$) divides a log into two equidistant steps, a factor of 2.15 (= $\sqrt[3]{10}$) divides a decade into three steps. The factor of 1.47 (= $6\sqrt{10}$) divides a log into six equidistant steps, and the factor of 1.21 (= $\sqrt[12]{10}$) divides the log into 12 steps.

For an easier biometrical evaluation of several related concentration response experiments use decimal geometric concentration series rather than dual geometric series. The technical production of decimal geometric concentration series is simple. An example is given for factor 1.47:

*Dilute 1 volume of the highest concentration by adding 0.47 volumes of diluent. After equilibration, dilute 1 volume of this solution by adding 0.47 volumes of diluent...(etc.).*

- Determine which test chemical concentration is closest to the IC50 value (e.g., 50 % cytotoxicity). Use that value as a central concentration and adjust dilutions higher and lower in equal steps for the definitive assay.

## F. Test Procedure

### 1. 96-Well Plate Configuration

The 3T3 NRU assay for test chemicals will use the 96-well plate configuration shown in Figure 1.

### 2. Application of Test Chemical

a) Two optional methods for rapidly applying the 2X dosing solutions onto the 96-well plates may be utilized. The first method is to add each of the 2X dosing solutions into labeled, sterile reservoirs (e.g., Corning/Costar model 4870 sterile polystyrene 50 mL reagent reservoirs and/or Corning/Transtar model 4878 disposable reservoir liners, 8-channel). The second method utilizes a "dummy" plate (i.e., an empty sterile 96-well plate) prepared to hold the dosing solutions immediately prior to treatment of the test plate (with cells). The test chemical and control dosing solutions should be dispensed into the dummy plate in the same pattern/order as will be applied to the plate containing cells. More volume than needed for the test plate (i.e. greater than 50 µl/well) should be in the wells of the dummy plate. At the time of treatment initiation, a multi-channel micropipettor is used to transfer the 2X dosing solutions, from the reservoirs or dummy plate, to the appropriate wells on the treatment plate (as described in step c. below). These methods will ensure that the dosing solutions can be transferred rapidly to the appropriate wells of the test plate to initiate treatment times and to minimize the range of treatment initiation times across a large number of treatment plates, and to prevent "out of order" dosing. A third option, though not a recommended option, is to transfer test chemical solutions well by well using a single channel pipettor or repeat pipettor. This option will increase the amount of time needed for test chemical application. The use of a repeat pipettor increases the risk of dislodging cells from the culture plate.

b) After 24 h ± 1 h incubation of the cells, remove Routine Culture Medium from the cells by careful inversion of the plate (i.e., "dump") over an appropriate receptacle. Gently blot the plate on a sterile paper towel so that the monolayer is minimally disrupted. Do not use automatic plate washers for this procedure nor vacuum aspiration.

c) Immediately add 50 µl of Treatment Medium to each well. Then add 50 µl Treatment Medium containing either the appropriate concentration of test chemical, the PC, or the VC (see Figure 1 for the plate configuration). The solutions will be transferred from the dummy plate to the test plate by adding the vehicle control first then lowest to highest dose so that the same pipette tips on the eight channel pipettor can be used for the whole plate.

d) Incubate cells for 48 h ± 0.5 h (37ºC ± 1ºC, 90 % ± 5 % humidity, and 5.0 % ± 1 % $CO_2$/air).

e) **Positive Control**: For each set of test chemical plates used in an assay, a separate plate of positive control concentrations will be set up following the concentration range established in developing the positive control database. This plate will follow the same schedule and procedures as used for the test chemical plates.

**3. Microscopic Evaluation**

After at least 46h treatment, examine each plate under a phase contrast microscope to identify systematic cell seeding errors and growth characteristics of control and treated cells. Record any changes in morphology of the cells due to the cytotoxic effects of the test chemical, but do not use these records for any quantitative measure of cytotoxicity. Undesirable growth characteristics of control cells may indicate experimental error and may be cause for rejection of the assay. Use the following Visual Observations Codes in the description of cell culture conditions.

**Visual Observations Codes**

| Note Code | Note Text |
|---|---|
| | |
| 1 | Normal Cell Morphology |
| 2 | Low Level of Cell Toxicity |
| 3 | Moderate Level of Cell Toxicity |
| 4 | High level of Cell Toxicity |
| 1P | Normal Cell Morphology with Precipitate |
| 2P | Low Level of Cell Toxicity with Precipitate |
| 3P | Moderate Level of Cell Toxicity with Precipitate |
| 4P | High level of Cell Toxicity with Precipitate |
| 5P | Unable to View Cells Due to Precipitate |

**4. Measurement of NRU**

a) Carefully remove (i.e., "dump") the Treatment Medium and rinse the cells very carefully with 250 µl pre-warmed D-PBS. Remove the rinsing solution by gentle tapping. Add 250 µl NR medium (to all wells including the blanks) and incubate (37ºC ± 1ºC, 90 % ± 5 % humidity, and 5.0 % ± 1 % $CO_2$/air) for 3 h.
b) After incubation, remove the NR medium, and carefully rinse cells with 250 µl D-PBS.
c) Decant and blot D-PBS from the plate. (Optionally: centrifuge the reversed plate.)
d) Add exactly 100 µl NR Desorb (ETOH/acetic acid) solution to all wells, including blanks.
e) Shake microtiter plate rapidly on a microtiter plate shaker for 20 – 45 min to extract NR from the cells and form a homogeneous solution.
f) Measure the absorption (within 60 minutes of adding NR Desorb solution) of the resulting colored solution at 540 nm ± 10 nm in a microtiter plate reader

(spectrophotometer), using the blanks as a reference. Save raw data in the Excel format as provided by the Study Management Team.

**5. Quality Check of 3T3 NRU Assay**

a) *Test Acceptance Criteria*

1) A test meets acceptance criteria, if the $IC_{50}$ for SLS is within the 95 % CI of the historical mean established by the Test Facility (as per **Section D**).

2) A test meets acceptance criteria if the mean $OD_{540}$ of VCs is ≥ 0.3 and ≤ 1.1.

3) A test meets acceptance criteria if the left and the right mean of the VCs do not differ by more than 15 % from the mean of all VCs.

*b) Checks for Systematic Cell Seeding Errors*

The absolute value of optical density ($OD_{540}$ of NRU) obtained in the untreated vehicle control may indicate whether the $2.5\times10^3$ cells seeded per well have grown exponentially with normal doubling time during the two days of the assay. If doubling time experiments were performed using the NRU assay, then the historical optical densities observed during the doubling time experiments can be used for comparison to determine exponential growth.

To check for systematic cell seeding errors, untreated VCs are placed both at the left side (row 2) and the right side (row 11 for the test plates) of the 96-well plate. Aberrations in the cell monolayer for the VCs may reflect a volatile and toxic test article present in the assay.

Checks for cell seeding errors may also be performed by examining each plate under a phase contrast microscope to assure that cell quantity is consistent.

c) *Quality Check of Concentration-Response*

The $IC_{50}$ derived from the concentration-response of the test chemicals will be backed by at least three responses ≥ 10 % and ≤ 90 % inhibition of NRU. If this is not the case, and the concentration progression factor can be easily reduced, reject the experiment and repeat it with a smaller progression factor. Numerical scoring of the cells (see **Section F.3**) should be determined and documented in the Study Workbook.

## G. Data Analysis

A calculation of cell viability expressed as NRU is made for each concentration of the test chemical by using the mean NRU of the six replicate values (minimum of four acceptable replicate well) per test concentration (blanks will be subtracted). This value is compared with the mean NRU of all VC values (provided VC values have met the VC acceptance criteria). Relative cell viability is then expressed as percent of untreated VC. If achievable, the eight concentrations of each chemical tested will span the range of no effect up to total inhibition of cell viability. Data from the microtiter plate reader shall be transferred to the Excel® spreadsheet provided by the Study Management Team for determining cell viability and

performing statistical analyses.

The concentration of a test chemical reflecting a 20 %, 50 %, and 80 % inhibition of cell viability (i.e., the $IC_{20}$, $IC_{50}$, and $IC_{80}$) is determined from the concentration-response by applying a Hill function to the concentration-response data. It will not be necessary for the Testing Facilities to derive the equation since statistical software (e.g., GraphPad PRISM® 3.0) specified by the Study Management Team shall be used to calculate $IC_{20}$, $IC_{50}$, and $IC_{80}$ values (and the associated confidence limits) for each test chemical. In addition, the Study Management Team shall provide guidelines for calculating ICx values and confidence limits. The Testing Facility shall report data using at least three (3) significant figures and shall forward the results from each assay to the Study Management Team/biostatistician through the designated contacts in electronic format and hard copy upon completion of testing. The Study Management Team will be directly responsible for the statistical analyses of the Validation Study data.

## VIII. REFERENCES

Hackenberg, U. and H. Bartling. 1959. Messen und Rechnen im pharmakologischen Laboratorium mit einem speziellen Zahlensystem (WL24-System). Arch. Exp. Pathol. Pharmakol. 235: 437-463.

Spielmann, H., S. Gerner, S. Kalweit, R. Moog, T. Wirnserberger, K. Krauser, R. Kreiling, H. Kreuzer, N.P. Luepke, H.G. Miltenburger, N. Müller, P. Murmann, W. Pape, B. Siegmund, J. Spengler, W. Steiling, and F.J. Wiebel. 1991. Interlaboratory assessment of alternatives to the Draize eye irritation test in Germany. Toxicol. *In Vitro* 5: 539-542.

## IX. APPROVAL

| | |
|---|---|
| _____ | _____ |
| **SPONSOR REPRESENTATIVE** | **DATE** |
| **(Print or type name)** | |
| _____ | _____ |
| **Test Facility STUDY DIRECTOR** | **DATE** |
| **(Print or type name)** | |

# Appendix C2

## Test Method Protocol for the Normal Human Epidermal Keratinocyte (NHK) Neutral Red Uptake Cytotoxicity Test (Phase Ia)

***[This Page Intentionally Left Blank]***

# TEST METHOD PROTOCOL
# for the NHK Neutral Red Uptake Cytotoxicity Test

**A Test for Basal Cytotoxicity for an In Vitro Validation Study**

**June 14, 2002**

**Prepared by**

**The National Toxicology Program (NTP) Interagency Center for the Evaluation of Alternative Toxicological Methods (NICEATM)**

**Based on Standard Operating Procedure Recommendations from an International Workshop Organized by the Interagency Coordinating Committee on the Validation of Alternative Methods (ICCVAM)**

**National Institute of Environmental Health Sciences (NIEHS)**
**National Institutes of Health (NIH)**
**U.S. Public Health Service**
**Department of Health and Human Services**

# TEST METHOD PROTOCOL

# The Normal Human Keratinocyte (NHK) Neutral Red Uptake Cytotoxicity Test
# A Test for Basal Cytotoxicity

## I. PURPOSE

The purpose of this study is to evaluate the cytotoxicity of test chemicals using the Normal Human Keratinocyte (NHK) Neutral Red Uptake (NRU) cytotoxicity test. The data will be used to evaluate the intra- and inter-laboratory reproducibility of the assay and effectiveness of the cytotoxicity assay to predict the starting doses for rodent acute oral systemic toxicity assays. This test method protocol outlines the procedures for performing the cytotoxicity test and is in support of the *in vitro* validation study organized by NICEATM and the European Centre for the Validation of Alternative Methods (ECVAM) and sponsored by NIEHS, U.S. Environmental Protection Agency, and ECVAM. This test method protocol applies to all personnel involved with performing the cytotoxicity assay.

### A. Determination of Positive Control Database

An historical database of $IC_{50}$ values for the positive control chemical (Sodium Lauryl [dodecyl] Sulfate {SLS}) must be established and maintained by performing 10 concentration-response assays on the NHK cells before performing the NRU assay on test chemicals. Once the mean $IC_{50}$ and the 95 % confidence interval (CI) of the $IC_{50}$ of SLS are established, the values will be used as an acceptance criterion for test sensitivity for the NHK NRU assay.

### B. NHK Neutral Red Uptake Cytotoxicity Test

After acceptable positive control mean $IC_{50}$ and 95 % CI values have been established, the NHK NRU test will be performed to analyze the *in vitro* toxicity of test chemicals. This test will be used to determine $IC_{20}$, $IC_{50}$, and $IC_{80}$ values for a predetermined set of test chemicals of varying toxicities.

## II. SPONSOR

**A. Name**: National Institute of Environmental Health Sciences (NIEHS); The National Toxicology Program (NTP) Interagency Center for the Evaluation of Alternative Toxicological Methods (NICEATM)

**B. Address**: P.O. Box 12233
Research Triangle Park, NC 27709

**C. Representative**: *Named Representative*

## III. IDENTIFICATION OF TEST AND CONTROL SUBSTANCES

**A. Test Chemicals**: *Blinded chemicals 1*

**B. Controls**:

| | |
|---|---|
| Positive: | Sodium Lauryl Sulfate |
| Vehicle (Negative): | Assay medium |
| Solvent (as needed): | Assay medium with appropriate solvent used to prepare the test chemicals (**Section VII.E**) |

## IV. TESTING FACILITY AND KEY PERSONNEL

- Name:
- Address:
- Study Director:
- Laboratory Technician(s):
- Scientific Advisor:
- Quality Assurance Director:
- Safety Manager:
- Facility Management:

### A. Test Schedule

- Proposed Experimental Initiation Date:
- Proposed Experimental Completion Date:
- Proposed Report Date:

## V. TEST SYSTEM

The NRU cytotoxicity assay procedure is a cell survival/viability chemosensitivity assay based on the ability of viable cells to incorporate and bind neutral red (NR), a supravital dye. NR is a weak cationic dye that readily penetrates cell membranes by non-ionic diffusion and accumulates intracellularly in lysosomes. Alterations of the cell surface or the sensitive lysosomal membrane lead to lysosomal fragility and other changes that gradually become irreversible. Such changes brought about by the action of xenobiotics result in a decreased uptake and binding of NR. It is thus possible to distinguish between viable, damaged, or dead cells, which is the basis of this assay.

Healthy mammalian cells, when maintained in culture, continuously divide and multiply over time. A toxic chemical, regardless of site or mechanism of action, will interfere with this process and result in a reduction of the growth rate as reflected by cell number. Cytotoxicity is expressed as a concentration dependent reduction of the uptake of the NR after chemical exposure thus providing a sensitive, integrated signal of both cell integrity and growth inhibition.

## VI. DEFINITIONS

**A.**. *Hill function*: a four parameter logistic mathematical model relating the concentration of test chemical to the response being measured in a sigmoidal shape.

$$Y = \text{Bottom} + \frac{\text{Top} - \text{Bottom}}{1 + 10^{(\text{logIC50} - X)\text{HillSlope}}}$$

where Y= response, X is the logarithm of dose (or concentration), Bottom is the minimum response, Top is the maximum response, logIC50 is logarithm of X at the response midway between Top and Bottom, and HillSlope describes the steepness of the curve.

**B.** *Documentation*: all methods and procedures will be noted in a Study Workbook; logs will be maintained for general laboratory procedures and equipment (e.g., media preparation, test chemical preparation, incubator function); all optical density data obtained from the spectrophotometer plate reader will be saved in electronic and paper formats; all calculations of ICx values and other derived data will be in electronic and paper format; all data will be archived.

## VII. PROCEDURES

### A. Materials

[Note: Suggested brand names/vendors are listed in parentheses. Equivalents may be used unless otherwise noted.]

#### 1. Cell Lines

**Normal Human Epidermal Keratinocytes (NHK)**

Non-transformed cells; from cryopreserved primary or secondary cells (**Clonetics #CC-2507 or equivalent).** Cells will be Clonetics NHK cells.

*Clonetics/BioWhittaker* [BioWhittaker, 8830 Biggs Ford Road, Walkersville, MD 21793-0127

*BioWhittaker Europe* [BioWhittaker Europe, S.P.R.L. Parc Industriel de Petit Rechain, B-4800 Verviers, BELGIUM]

#### 2. Technical Equipment

a) Incubator: 37ºC ± 1ºC, 90 % ± 5 % humidity, 5.0 % ± 1 % $CO_2$/air
b) Laminar flow clean bench (standard: "biological hazard")
c) Water bath: 37ºC ± 1ºC
d) Inverse phase contrast microscope
e) Sterile glass tubes with caps (e.g., 5ml)
f) Centrifuge (optionally: equipped with microtiter plate rotor)
g) Laboratory balance
h) 96-well plate spectrophotometer (i.e., plate reader) equipped with 540 nm ± 10 nm filter
i) Shaker for microtiter plates
j) Cell counter or hemocytometer
k) Pipetting aid
l) Pipettes, pipettors (multi-channel and single channel), dilution block
m) Cryotubes
n) Tissue culture flasks (75 - 80 $cm^2$, 25 $cm^2$)
o) 96-well flat bottom tissue culture microtiter plates (e.g., Nunc # 167 008; Corning/COSTAR tissue culture-treated)
p) pH paper (wide and narrow range)

[Note: Tissue culture flasks and microtiter plates should be prescreened to ensure that they adequately support the growth of NHK.]

**3. Chemicals, Media, and Sera**

a) Keratinocyte Basal Medium without $Ca^{++}$ (KBM®, Clonetics CC-3104) that is completed by adding the KBM® SingleQuots® (Clonetics CC-4131) to achieve the proper concentrations of epidermal growth factor, insulin, hydrocortisone, antimicrobial agents, bovine pituitary extract, and calcium (e.g., Clonetics Calcium SingleQuots®, CC-4202).
b) HEPES Buffered Saline Solution (HEPES-BSS) (e.g., Clonetics # CC-5022)
c) 0.025 % Trypsin/EDTA solution (e.g., Clonetics # CC-5012)
d) Trypsin Neutralizing Solution (TNS) (e.g., Clonetics # CC-5002)
e) Phosphate Buffered Saline (PBS)
f) Dulbecco's Phosphate Buffered Saline (D-PBS) with glucose) formulation containing calcium and magnesium cations, and supplemented with 1000 mg/L glucose)
g) Fetal bovine serum (FBS)
h) Neutral Red (NR) Dye – tissue culture-grade; liquid form (e.g., SIGMA N 2889); powder form (e.g., SIGMA N 4638)
i) Dimethyl sulfoxide (DMSO), U.S.P analytical grade (Store under nitrogen @ -20ºC)
j) Ethanol (ETOH), U.S.P. analytical grade (100 %, non-denatured for test chemical preparation; 95 % can be used for the desorb solution)
k) Glacial acetic acid, analytical grade
l) Hanks' Balanced Salt Solution without $Ca^{2+}$ or $Mg^{2+}$ (CMF-HBSS) (e.g., Invitrogen # 14170)
m) Distilled $H_2O$ or any purified water suitable for cell culture (sterile)
n) Sterile paper towels (for blotting 96-well plates)

**B. Preparations of Media and Solutions**

[Note: All solutions (except NR stock solution, NR medium and NR desorb), glassware, pipettes, etc., shall be sterile and all procedures should be carried out under aseptic conditions and in the sterile environment of a laminar flow cabinet (biological hazard standard).]

**1. Media**

a) Routine Culture Medium/Treatment Medium

KBM® (Clonetics CC-3104) supplemented with KBM® SingleQuots® (Clonetics CC-4131) and Clonetics Calcium SingleQuots® (CC-4202) to make 500ml of medium. Final concentration of supplements in medium are:

| | |
|---|---|
| 0.0001 ng/ml | Human recombinant epidermal growth factor |
| 5 μg/ml | Insulin |
| 0.5 μg/ml | Hydrocortisone |
| 30 μg/ml | Gentamicin |
| 15 ng/ml | Amphotericin B |
| 0.10 mM | Calcium |
| 30 μg/ml | Bovine pituitary extract |

*Complete media should be kept at 4°C and stored for no longer than two weeks.*

NOTE:
KBM® SingleQuots® contain the following stock concentrations and volumes:

| | | |
|---|---|---|
| 0.1 ng/ml | hEGF | 0.5 ml |
| 5.0 mg/ml | Insulin | 0.5 ml |
| 0.5 mg/ml | Hydrocortisone | 0.5 ml |
| 30 mg/ml | Gentamicin, 15 ug/ml Amphotericin-B | 0.5 ml |
| 7.5 mg/ml | Bovine Pituitary Extract (BPE) | 2.0 ml |

Clonetics Calcium SingleQuots® are 2 ml of 300mM concentration of calcium.

165 ul of solution per 500 ml calcium-free medium equals 0.10 mM calcium in the medium.

**2. Neutral Red (NR) Stock Solution**

The liquid tissue culture-grade stock NR Solution will be the first choice for performing the assay. If the liquid form is not available, the following formulation can be prepared.

0.4 g NR Dye powder in 100 ml of $H_2O$

Make up prior to use and store dark at room temperature. May store for up to two months.

**3. Neutral Red (NR) Medium**

EXAMPLE:

| | |
|---|---|
| 1 ml (4mg NR dye/ml) | NR Stock Solution |
| 79 ml | KGM |

The final concentration of the NR Medium is 50 μg NR dye/ml.

[Note: The NR medium should be incubated overnight at 37ºC ± 1ºC and centrifuged at approximately 600 x g for 10 min (to remove NR crystals) before adding to the cells. Alternative procedures (e.g., Millipore filtering) can be used as long as they guarantee that NR medium is free of crystals.]

**4. Ethanol/Acetic Acid Solution (NR Desorb)**

| | |
|---|---|
| 1 % | Glacial acetic acid solution |
| 50 % | Ethanol |
| 49 % | $H_2O$ |

## C. Methods

**1. Cell Maintenance and Culture Procedures**

NHK cells are routinely grown as a monolayer in tissue culture grade flasks (e.g., 25 $cm^2$) at 37ºC ± 1ºC, 90 % ± 5 % humidity, and 5.0 % ± 1 % $CO_2$/air. The cells should be

examined on a daily basis under a phase contrast microscope, and any changes in morphology or their adhesive properties must be noted in a Study Workbook (See **Section VII.F.3**)

**2. Receipt of Cryopreserved Keratinocytes**

Upon receipt of cryopreserved keratinocytes, the vial(s) of cells shall be stored in a liquid nitrogen freezer until needed.

**3. Thawing Cells and Establishing Cell Cultures**

a) Thaw cells by putting ampules into a water bath at 37°C for as brief a time as possible. Do not thaw cells at room temperature or by hand. Seed the thawed cells into culture flasks as quickly as possible and with minimal handling.
b) Slowly (taking approximately 1-2 min) add 9 ml of Routine Culture Medium to the cells suspended in the cryoprotective solution and transfer cells into flasks containing pre-warmed Routine Culture Medium (See Table 1).
c) Incubate the cultures at 37ºC ± 1ºC, 90 % ± 5 % humidity, 5.0 % ± 1 % $CO_2$/air until the cells attach to the flask, at which time the Routine Culture Medium should be removed and replaced with fresh Routine Culture Medium.
d) Unless otherwise specified, the cells should be incubated at 37ºC ± 1ºC, 90 % ± 5 % humidity, 5.0 % ± 1 % $CO_2$/air and fed every 2-3 days until they exceed 50 % confluence (but less than 80 % confluent).

**Table 1. Establishing Cell Cultures**

| Cells/25 $cm^2$ flask<br>(in approximately 5 ml)<br>1 flask each cell concentration | $6.25 \times 10^4$<br>(2500 $cm^2$) | $1.25 \times 10^5$<br>(5000 $cm^2$) | $2.25 \times 10^5$<br>(9000 $cm^2$) |
|---|---|---|---|
| Approximate Time to Subculture | 96+ hours | 72 - 96 hours | 48 - 72 hours |
| Cells to 96-Well Plates | 6 – 8 plates | 6 – 8 plates | 6 – 8 plates |

Cell growth guidelines – actual growth of individual cell lots may vary.

**4. Subculture of NHK Cells to 96-Well Plates**

[Note: It is important that cells have overcome the lag growth phase when they are used for the test. Keratinocytes will be passaged only into the 96-well plates and will not be subcultured into flasks for use in later assays]

(a) When the keratinocyte culture in a 25 $cm^2$ flask exceeds 50 % confluence (but less than 80 % confluent), remove the medium and rinse the culture twice with 5 ml HEPES-BSS. The second rinse should be left on the cells for approximately 5 minutes. Discard the washing solution.
(b) Add 2 ml trypsin/EDTA solution to each flask and remove after 15 to 30 seconds. Incubate the flask at room temperature for 3 to 7 min. When more than 50 % of the cells become dislodged, rap the flask sharply against the palm of the hand.
(c) When most of the cells have become detached from the surface, rinse the flask with 5 ml of room temperature TNS.
(d) Then rinse the flask with 5 ml CMF-HBSS and transfer the cell suspension to a centrifuge tube.

(e) Pellet the cells by centrifugation for 5 min at approximately 220 x g. Remove the supernatant by aspiration.
(f) Resuspend the keratinocyte pellet by gentle trituration (to have single cells) in Routine Culture Medium. It is important to obtain a single cell suspension for exact counting. Count a sample of the cell suspension using a hemocytometer or cell counter.
(g) Prepare a cell suspension of 0.8 - $1x10^4$ cells/ml in Routine Culture Medium. Using a multi-channel pipette, dispense 250 µl PBS only into the peripheral wells (blanks) of a 96-well tissue culture microtiter plate. In the remaining wells, dispense 250 µl of the cell suspension ($2x10^3$ – $2.5x10^3$ cells/well). Prepare one plate per chemical to be tested.
(h) Incubate cells (37ºC ± 1ºC, 90 % ± 5.0 % humidity, and 5 % ± 1 % $CO_2$/air) so that cells form a 30+ % monolayer (~48-72 h). This incubation period assures cell recovery and adherence and progression to exponential growth phase.
(i) Examine each plate under a phase contrast microscope to assure that cell growth is relatively even across the microtiter plate. This check is performed to identify experimental and systemic cell seeding errors. Record observations in the Study Workbook.

**5. Determination of Doubling Time**

a) Establish cells in culture and trypsinize cells as per **Section C.4** for subculture. Resuspend cells in appropriate culture medium. Use Table 1 to determine seeding densities.
b) Seed five sets of cell culture vessels in triplicate for each cell type (e.g., 15 tissue culture dishes [60mm x 15mm]). Use appropriate volume of culture medium for the culture vessels. Note number of cells placed into each culture dish. Place dishes into the incubators (37ºC ± 1ºC, 90 % ± 5 % humidity, 5.0 % ± 1 % $CO_2$/air).
c) After 4-6 hours (use the same initial measurement time for each subsequent doubling time experiment), remove three culture dishes and trypsinize cells. Count cells using a cell counter or hemocytometer. Cell viability may be determined by dye exclusion (e.g., Trypan Blue). Determine the total number of cells and document. Repeat sampling at 24 hr, 48 hr, 72 hr, and 96 hr post inoculation. Change culture medium at 72 hr or sooner in remaining dishes if indicated by pH drop.
d) Plot cell concentration (per ml of medium) on a log scale against time on a linear scale. Determine lag time and population doubling time. The doubling time will be in the log (exponential) phase of the growth curve. Additional dishes and time are needed if the entire growth curve is to be determined (lag phase, log phase, plateau phase).

## D. Establishing the Positive Control Database

An historical database of $IC_{50}$ values for the positive control chemical (Sodium Lauryl [dodecyl] Sulfate {SLS}) must be established and maintained by performing 10 concentration-response assays on the NHK cells.

**1. Positive Control Chemical Preparation**

The positive control chemical (SLS) is prepared in the same manner as the test chemical (**Sections E.1 and E.2**) by following the instructions and substituting "test chemical" with "SLS."

**2. Range Finder Experiment**

Before initiating the 10 concentration-response assays, a range finder experiment will be performed using eight concentrations of SLS by diluting the stock solution with a constant factor as per **Section E.3.a** and **E.3.b**. The eight chemical concentrations will be tested as per the test procedure outlined in **Section F** and analyzed as per procedures outlined in **Section G**.

**3. Test Procedure**

Once a range has been determined that satisfies the criteria in **Section E.3.b**, the definitive concentration-response assays shall use a $\sqrt[6]{10} = 1.47$ dilution scheme centered on the $IC_{50}$. The Test Facility will perform two tests per day on five different days. The 95 % CI of the $IC_{50}$ of SLS will be established and defined as an acceptance criterion for test sensitivity for the NHK NRU assay. The confidence intervals shall be calculated using the average of the individual $IC_{50}$ values from each positive control assay performed. An example of an historical mean $IC_{50}$ of SLS in NHK cultures is **4.4 µg/ml ± 0.97 µg/ml [**two standard deviations] (Triglia, 1989). All testing will follow the instructions in **Section F** using the 96-well plate configuration in Figure 1. The test meets acceptance criteria if the conditions in **Sections F.5.a.2** and **F.5.a.3** are met.

***Figure 1. 96-Well Plate Configuration for Positive Control and Test Chemical Assays***

| | 1 | 2 | 3 | 4 | 5 | 6 | 7 | 8 | 9 | 10 | 11 | 12 |
|---|---|---|---|---|---|---|---|---|---|---|---|---|
| A | b | b | b | b | b | b | b | b | b | b | b | b |
| B | b | VC | $C_1$ | $C_2$ | $C_3$ | $C_4$ | $C_5$ | $C_6$ | $C_7$ | $C_8$ | VC | b |
| C | b | VC | $C_1$ | $C_2$ | $C_3$ | $C_4$ | $C_5$ | $C_6$ | $C_7$ | $C_8$ | VC | b |
| D | b | VC | $C_1$ | $C_2$ | $C_3$ | $C_4$ | $C_5$ | $C_6$ | $C_7$ | $C_8$ | VC | b |
| E | b | VC | $C_1$ | $C_2$ | $C_3$ | $C_4$ | $C_5$ | $C_6$ | $C_7$ | $C_8$ | VC | b |
| F | b | VC | $C_1$ | $C_2$ | $C_3$ | $C_4$ | $C_5$ | $C_6$ | $C_7$ | $C_8$ | VC | b |
| G | b | VC | $C_1$ | $C_2$ | $C_3$ | $C_4$ | $C_5$ | $C_6$ | $C_7$ | $C_8$ | VC | b |
| H | b | b | b | b | b | b | b | b | b | b | b | b |

VC = untreated VEHICLE CONTROL (mean viability set to 100 %)
$C_1 – C_8$ = Test Chemicals or Positive Control (SLS) at eight concentrations (C1 = highest, C8 = lowest)
b = BLANKS (contain **no** cells)

## E. Preparation of Test Chemicals

[Note: Test chemical must be freshly prepared immediately prior to use. Each stock dilution should have at least 1-2 ml total volume to ensure adequate solution for the test wells in a

single 96-well plate. The solutions must not be cloudy nor have noticeable precipitate. Test chemicals must be at room temperature before dissolving and diluting. Preparation under red or yellow light may be necessary, if rapid photodegradation is likely to occur.]

**1. Dissolving Test Chemical**

a) Approximately 200,000 µg (200 mg) of the test chemical will be weighed into a glass tube and the weight will be documented. Assay-specific culture medium will be added to the vessel so that the concentration is 2,000,000 µg/ml (2000 mg/ml) and mixed using the mixing procedures outlined in **Section E.1.c**. If complete solubility is achieved, then additional solubility procedures are not needed. The test chemical can then be prepared and diluted for use in an assay. If only partial solubility is achieved, then add additional medium in the steps outlined in Table 1 until the concentration is a minimum of 200,000 µg /ml. If complete solubility at 200,000 µg/ml in culture medium can't be attained, then repeat the solubility steps in Table 1 and **Section E.1.c** using the other solvent(s) in the solubility hierarchy. Test chemicals that are only soluble in DMSO or ethanol will be prepared at 2,000,000 µg/ml as the highest concentration of stock solution.

**Table 2 Determination of Solubility**

| Solubility Data | Step 1 | Step 2 | Step 3 |
|---|---|---|---|
| Total volume of medium added (ml) | 0.1 | 0.5 | 1.0 |
| Total volume of DMSO or ethanol added (ml) | 0.1 | 0.5 | 1.0 |
| Approximate solubility (µg /ml) | ≥ 2,000,000 | 400,000 | 200,000 |

Example: If complete solubility is not achieved in 0.1 ml medium (Step 1), then 0.4 ml is added to obtain a total volume of 0.5 ml (Step 2). No additional weighing of chemical is needed. Chemical and medium are again mixed in an attempt to dissolve.

b) Each test chemical will be prepared such that the highest test concentration applied to the cells in each range finding experiment is 100,000 µg/ml in culture medium (10,000 µg/ml if DMSO or ethanol is used). If 100,000 µg/ml in culture medium cannot be achieved, then the highest concentration attainable will be used. If the range finding experiment shows that 10,000 µg/ml is not high enough for the range of chemicals dissolved in DMSO or ethanol to meet the acceptance criteria, then higher concentrations will be used for the definitive experiment.

c) The following mixing and solvent hierarchy will be followed in dissolving the test chemical:

1) Dissolve test chemical in Treatment Medium.
2) Gently mix. Vortex the tube (1 –2 minutes).
3) If test chemical hasn't dissolved, use sonication for up to 5 minutes.
4) If sonication doesn't work, then warm solution to 37°C.

If the test chemical doesn't dissolve (i.e., solution is cloudy or has precipitate) in the Treatment Medium, then follow the steps 1) through 4) using DMSO instead of Treatment Medium.

If the test chemical doesn't dissolve in DMSO, then follow steps 1) through 4) using ethanol instead of DMSO.

d) For the range finding experiments, the highest 2x concentration of test chemical dissolved only in culture medium will be 200,000 µg/ml (200 mg/ml). The highest 2x concentration of test chemical first dissolved in DMSO or ethanol then transferred to culture medium will be 20,000 µg/ml (20 mg/ml). Dissolve test chemical in appropriate medium/solvent (at 200-fold the desired final test concentration in the case of DMSO or ethanol solvents, i.e., 20,000 µg/ml). The final solvent (DMSO or ethanol) concentration for application to the cells should be kept at a constant level of 0.5 % (v/v) in the vehicle controls and in all of the eight test concentrations. The following example illustrates the preparation of test chemical in solvent and the dilution of dissolved test chemical in medium before application to NHK cells.
<u>Example</u>: Preparation of Test Chemical in Solvent Using a Log Dilution Scheme
1) Label eight tubes 1 – 8. Add 0.9 ml solvent (e.g., DMSO or ethanol) to tubes 2 -- 8.
2) Prepare stock solution of 2,000,000 µg test chemical/ml solvent in tube # 1.
3) Add 0.1 ml of 2,000,000µg/ml dilution from tube #1 to tube #2 to make a 1:10 dilution in solvent (i.e., 200,000 µg/ml).
4) Add 0.1 ml of 200,000 µg/ml dilution from tube #2 to tube #3 to make another 1:10 dilution (i.e., 1:100 dilution from stock solution) in solvent (i.e., 20,000 µg/ml)
5) Continuing making serial 1:10 dilutions in the prepared solvent tubes.
6) Since each concentration is 200 fold greater than the concentration to be tested, dilute 1 part dissolved chemical in each tube with 99 parts of culture medium (e.g., 0.1 ml of test chemical in DMSO + 9.9 ml culture medium) to derive the 8 2x concentrations for application to NHK cells. Each test chemical concentration will then contain 1 % v/v solvent. The NHK cells will have 0.125 ml of culture medium in the wells prior to application of the test chemical. By adding 0.125 ml of the appropriate 2x test chemical concentration to the appropriate wells, the test chemical will be diluted appropriately (e.g., highest concentration in well will be 10,000 µg/ml) in a total of 0.250 ml and the solvent concentration in the wells will be 0.5% v/v.

Check carefully to determine whether the chemical is still dissolved after the transfer from solvent stock solution to medium, and reduce the highest test concentration, if necessary. Document all test chemical preparations in the Study Workbook.

**2. pH of Test Chemical Solutions**

Measure the pH of the highest concentration of the test chemical in culture medium using pH paper. Document the pH and note the color of the medium for all dilutions. Do not adjust the pH.

**3. Concentrations of Test Chemical**

a) Range Finder Experiment

Test eight concentrations of the test chemical/PC by diluting the stock solution with a constant factor covering a large range. The initial dilution series shall be log dilutions (e.g., 1:10, 1:100, 1:1000, etc.).

b) Main Experiment

Depending on the slope of the concentration-response curve estimated from the range finder, the dilution/progression factor in the concentration series of the main experiment should be smaller (e.g., $\sqrt[6]{10} = 1.47$; NOTE: this dilution factor will be used for the definitive positive control assays [**Section VII.D.3**]). Cover the relevant concentration range (≥10 % and ≤ 90 % effect) with at least three points of a graded effect, avoiding too many non-cytotoxic and/or 100 %-cytotoxic concentrations. Experiments revealing less than three cytotoxic concentrations in the relevant range shall be repeated, where possible, with a smaller dilution factor. (Taking into account pipetting errors, a progression factor of 1.21 is regarded the smallest factor achievable.)

c) Test Chemical Dilutions

- A factor of $\sqrt[2]{10} = 3.16$ could be used for covering a large range: (e.g., 1 ⇒3.16 ⇒10 ⇒31.6 ⇒100 ⇒316 ⇒1000 ⇒3160 µg/ml).

- The simplest geometric concentration series (i.e., constant dilution / progression factor) are dual geometric series (e.g., a factor of 2). These series have the disadvantage of numerical values that permanently change between logs of the series: (e.g., *log0*-2, 4, 8; *log1*- 16, 32, 64; *log2*- 128, 256, 512; *log3*- 1024, 2048,).

- The decimal geometric series, first described by Hackenberg and Bartling (1959) for use in toxicological and pharmacological studies, has the advantage that independent experiments with wide or narrow dose factors can be easily compared because they share identical concentrations. Furthermore, under certain circumstances, experiments can even be merged together:

EXAMPLE:

| | | | | | | | | | | | | |
|---|---|---|---|---|---|---|---|---|---|---|---|---|
| 10 | | | | | | 31.6 | | | | | | 100 |
| 10 | | | | 21.5 | | | | 46.4 | | | | 100 |
| 10 | | 14.7 | | 21.5 | | 31.6 | | 46.4 | | 68.1 | | 100 |
| 10 | 12.1 | 14.7 | 17.8 | 21.5 | 26.1 | 31.6 | 38.3 | 46.4 | 56.2 | 68.1 | 82.5 | 100 |

The dosing factor of 3.16 (= $\sqrt[2]{10}$) divides a log into two equidistant steps, a factor of 2.15 (= $\sqrt[3]{10}$) divides a decade into three steps. The factor of 1.47 (= $6\sqrt{10}$) divides a log into six equidistant steps, and the factor of 1.21 (= $\sqrt[12]{10}$) divides the log into 12 steps.

For an easier biometrical evaluation of several related concentration response experiments use decimal geometric concentration series rather than dual geometric series. The technical production of decimal geometric concentration series is simple. An example is given for factor 1.47:

*Dilute 1 volume of the highest concentration by adding 0.47 volumes of diluent. After equilibration, dilute 1 volume of this solution by adding 0.47 volumes of diluent...(etc.).*

- Determine which test chemical concentration is closest to the IC50 value (e.g., 50 % cytotoxicity). Use that value as a central concentration and adjust dilutions higher and lower in equal steps for the definitive assay.

## F. Test Procedure

1. The NHK NRU assay for test chemicals will use the 96-well plate configuration shown in Figure 1.

2. Application of Test Chemical

   a) Two optional methods for rapidly applying the 2X dosing solutions onto the 96-well plates may be utilized. The first method is to add each of the 2X dosing solutions into labeled, sterile reservoirs (e.g., Corning/Costar model 4870 sterile polystyrene 50 mL reagent reservoirs and/or Corning/Transtar model 4878 disposable reservoir liners, 8-channel). The second method utilizes a "dummy" plate (i.e., an empty sterile 96-well plate) prepared to hold the dosing solutions immediately prior to treatment of the test plate (with cells). The test chemical and control dosing solutions should be dispensed into the dummy plate in the same pattern/order as will be applied to the plate containing cells. More volume than needed for the test plate (i.e. greater than 125 µl/well) should be in the wells of the dummy plate. At the time of treatment initiation, a multi-channel micropipettor is used to transfer the 2X dosing solutions, from the reservoirs or dummy plate, to the appropriate wells on the treatment plate (as described in step c. below). These methods will ensure that the dosing solutions can be transferred rapidly to the appropriate wells of the test plate to initiate treatment times and to minimize the range of treatment initiation times across a large number of treatment plates, and to prevent "out of order" dosing. A third option, though not a recommended option, is to transfer test chemical solutions well by well using a single channel pipettor or repeat pipettor. This option will increase the amount of time needed for test chemical application. The use of a repeat pipettor increases the risk of dislodging cells from the culture plate.
   b) After 24 - 72 h incubation of the cells, remove Routine Culture Medium from the cells by careful inversion of the plate (i.e., "dump") over an appropriate receptacle. Gently blot the plate on a sterile paper towel so that the monolayer is minimally disrupted. Do not use automatic plate washers for this procedure nor vacuum aspiration.
   c) Immediately add 125 µl of fresh Routine Culture Medium to each well. Add 125 µl of the appropriate concentration of test chemical, the PC, or the VC (see Figure 1 for the plate configuration).
   d) Incubate cells for 48 h ± 0.5 h (37ºC ± 1ºC, 90 % ± 5 % humidity, and 5.0 % ± 1 % $CO_2$/air).
   e) **<u>Positive Control</u>**: For each set of test chemical plates used in an assay, a separate plate of positive control concentrations will be set up following the concentration range established in developing the positive control database. This plate will follow the same schedule and procedures as used for the test chemical plates.

**3. Microscopic Evaluation**

After at least 46 h treatment, examine each plate under a phase contrast microscope to identify systematic cell seeding errors and growth characteristics of control and treated cells. Record any changes in morphology of the cells due to the cytotoxic effects of the test chemical, but do not use these records for any quantitative measure of cytotoxicity. Undesirable growth characteristics of control cells may indicate experimental error and may be cause for rejection of the assay. Use the following Visual Observations Codes in the description of cell culture conditions.

**Visual Observations Codes**

| Note Code | Note Text |
|---|---|
| | |
| 1 | Normal Cell Morphology |
| 2 | Low Level of Cell Toxicity |
| 3 | Moderate Level of Cell Toxicity |
| 4 | High level of Cell Toxicity |
| 1P | Normal Cell Morphology with Precipitate |
| 2P | Low Level of Cell Toxicity with Precipitate |
| 3P | Moderate Level of Cell Toxicity with Precipitate |
| 4P | High level of Cell Toxicity with Precipitate |
| 5P | Unable to View Cells Due to Precipitate |

**4. Measurement of NRU**

a) Carefully remove (i.e., "dump") the Routine Culture Medium (with test chemical) and rinse the cells very carefully with 250 µl pre-warmed D-PBS. Remove the rinsing solution by gentle tapping and blot the plate. Add 250 µl NR medium (to all wells including the blanks) and incubate (37ºC ± 1ºC, 90 % ± 5 % humidity, and 5.0 % ± 1 % $CO_2$/air) for 3 h.
b) After incubation, remove the NR medium, and carefully rinse cells with 250 µl D-PBS.
c) Decant and blot D-PBS from the plate. (Optionally: centrifuge the reversed plate.)
d) Add exactly 100 µl NR Desorb (ETOH/acetic acid) solution to all wells, including blanks.
e) Shake microtiter plate rapidly on a microtiter plate shaker for 20 – 45 min to extract NR from the cells and form a homogeneous solution.
f) Measure the absorption (within 60 minutes of adding NR Desorb solution) of the resulting colored solution at 540 nm ± 10 nm in a microtiter plate reader (spectrophotometer), using the blanks as a reference. Save raw data in the Excel format as provided by the Study Management Team.

**5. Quality Check of Assay**

a) *Test Acceptance Criteria*

1) A test meets acceptance criteria, if the $IC_{50}$ for SLS is within the 95 % CI of the historical mean established by the Test Facility (as per **Section D**).
2) A test meets acceptance criteria if the mean $OD_{540}$ of VCs is ≥ 0.3 and ≤ 1.1.
3) A test meets acceptance criteria if the left and the right mean of the VCs do not differ by more than 15 % from the mean of all VCs.

b) *Checks for Systematic Cell Seeding Errors*

The absolute value of optical density ($OD_{540}$ of NRU) obtained in the untreated vehicle control may indicate whether the $2x10^3 – 2.5x10^3$ cells seeded per well have grown exponentially with normal doubling time during the assay. Historical optical densities observed during doubling time experiments can be used for comparison to determine exponential growth.

To check for systematic cell seeding errors, untreated VCs are placed both at the left side (row 2) and the right side (row 11 for the test plates) of the 96-well plate. Aberrations in the cell monolayer for the VCs may reflect a volatile and toxic test article present in the assay.

Checks for cell seeding errors may also be performed by examining each plate under a phase contrast microscope to assure that cell quantity is consistent.

c) *Quality Check of Concentration-Response*

The $IC_{50}$ derived from the concentration-response of the test chemicals should be backed by at least three responses between 10 and 90 % inhibition of NRU. If this is not the case, and the concentration progression factor can be easily reduced, reject the experiment and repeat it with a smaller progression factor. Numerical scoring of the cells (see **Section F.3**) should be determined and documented in the Study Workbook.

## G. Data Analysis

A calculation of cell viability expressed as NRU is made for each concentration of the test chemical by using the mean NRU of the six replicate values (minimum of four acceptable replicates wells) per test concentration. This value is compared with the mean NRU of all VC values (provided VC values have met the VC acceptance criteria). Relative cell viability is then expressed as percent of untreated VC. If achievable, the eight concentrations of each chemical tested will span the range of no effect up to total inhibition of cell viability. Data from the microtiter plate reader shall be transferred to the Excel® spreadsheet provided by the Study Management Team for determining cell viability and performing statistical analyses.

The concentration of a test chemical reflecting a 20 %, 50 %, and 80 % inhibition of cell viability (i.e., the $IC_{20}$, $IC_{50}$, and $IC_{80}$) is determined from the concentration-response by applying a Hill function to the concentration-response data. It will not be necessary for the Testing Facilities to derive the equation since statistical software (e.g., GraphPad PRISM® 3.0) specified by the Study Management Team shall be used to calculate $IC_{20}$, $IC_{50}$, and $IC_{80}$ values (and the associated confidence limits) for each test chemical. In addition, the Study Management Team shall provide guidelines for calculating ICx values and confidence limits. The Testing Facility shall report data using at least three (3) significant figures and shall forward the results from each assay to the Study Management Team/biostatistician through the designated contacts in electronic format and hard copy upon completion of testing. The Study Management Team will be directly responsible for the statistical analyses of the Validation Study data.

## VIII. REFERENCES

Clonetics Normal Human Keratinocyte Systems Instructions for Use, AA-1000-4-Rev.03/00. (http://www.clonetics.com).

Hackenberg, U. and H. Bartling. 1959. Messen und Rechnen im pharmakologischen Laboratorium mit einem speziellen Zahlensystem (WL24-System). Arch. Exp. Pathol. Pharmakol. 235: 437-463.

Triglia, D., P.T. Wegener, J. Harbell, K. Wallace, D. Matheson, and C. Shopsis. 1989. Interlaboratory validation study of the keratinocyte neutral red bioassay from Clonetics Corporation. In *Alternative Methods in Toxicology*, Volume 7. A.M. Goldberg, ed., pp. 357-365. Mary Ann Liebert, Inc., New York.

## IX. APPROVAL

_____ _____

**SPONSOR REPRESENTATIVE** **DATE**

**(Print or type name)**

_____ _____

**Testing Facility STUDY DIRECTOR** **DATE**
**(Print or type name)**

# Appendix C3

## Test Method Protocol for the BALB/c 3T3 Neutral Red Uptake Cytotoxicity Test (Phase Ib)

***[This Page Intentionally Left Blank]***

# TEST METHOD PROTOCOL
# for the BALB/c 3T3 Neutral Red Uptake Cytotoxicity Test

**A Test for Basal Cytotoxicity for an *In Vitro* Validation Study**
**Phase Ib**

**November 15, 2002**
**Revised November 22, 2002**
Revised by IIVS Nov. 26, 2002

**Prepared by**

**The National Toxicology Program (NTP) Interagency Center for the Evaluation of Alternative Toxicological Methods (NICEATM)**

**Based on Standard Operating Procedure Recommendations from an International Workshop Organized by the Interagency Coordinating Committee on the Validation of Alternative Methods (ICCVAM)**

**National Institute of Environmental Health Sciences (NIEHS)**
**National Institutes of Health (NIH)**
**U.S. Public Health Service**
**Department of Health and Human Services**

# TEST METHOD PROTOCOL

## The BALB/c 3T3 Neutral Red Uptake Cytotoxicity Test
## A Test for Basal Cytotoxicity
## Phase Ib

### I. PURPOSE

The purpose of this study is to evaluate the cytotoxicity of test chemicals using the BALB/c 3T3 Neutral Red Uptake (NRU) cytotoxicity test. The data will be used to evaluate the intra- and inter-laboratory reproducibility of the assay and effectiveness of the cytotoxicity assay to predict the starting doses for rodent acute oral systemic toxicity assays. This test method protocol outlines the procedures for performing the cytotoxicity test and supports the *in vitro* validation study organized by NICEATM and the European Centre for the Validation of Alternative Methods (ECVAM) and sponsored by NIEHS, U.S. Environmental Protection Agency, and ECVAM. This test method protocol applies to all personnel involved with performing the cytotoxicity assay.

#### A. BALB/c 3T3 Neutral Red Uptake Cytotoxicity Test

The 3T3 NRU test will be performed to analyze the *in vitro* toxicity of three (3) blinded/coded test chemicals. This test will be used to determine $IC_{20}$, $IC_{50}$, and $IC_{80}$ values for the predetermined set of test chemicals of varying toxicities.

### II. SPONSOR

**A.** Name: National Institute of Environmental Health Sciences (NIEHS); The National Toxicology Program (NTP) Interagency Center for the Evaluation of Alternative Toxicological Methods (NICEATM)

**B.** Address: P.O. Box 12233
Research Triangle Park, NC 27709

**C.** Representative: *Named Representative*

### III. IDENTIFICATION OF TEST AND CONTROL SUBSTANCES

**A.** Test Chemicals: *Blinded Chemicals (3)*

**B.** Controls:

| | |
|---|---|
| Positive: | Sodium Lauryl Sulfate |
| Vehicle (Negative): | Assay medium (DMEM containing 5% NBCS, 4 mM L-Glutamine, 100 IU/mL Penicillin, 100 µg/mL Streptomycin) |
| Solvent (as needed): | Assay medium with appropriate solvent used to prepare the test chemicals (**Section VII.E**) |

## IV. TESTING FACILITY AND KEY PERSONNEL

1) Name:
2) Address:
3) Study Director:
4) Laboratory Technician(s):
5) Scientific Advisor:
6) Quality Assurance Director:
7) Safety Manager:
8) Facility Management:

### A. Test Schedule

1) Proposed Experimental Initiation Date:
2) Proposed Experimental Completion Date:
3) Proposed Report Date:

## V. TEST SYSTEM

The NRU cytotoxicity assay procedure is a cell survival/viability chemosensitivity assay based on the ability of viable cells to incorporate and bind neutral red (NR), a supravital dye. NR is a weak cationic dye that readily penetrates cell membranes by non-ionic diffusion and accumulates intracellularly in lysosomes. Alterations of the cell surface or the sensitive lysosomal membrane lead to lysosomal fragility and other changes that gradually become irreversible. Such changes brought about by the action of xenobiotics result in a decreased uptake and binding of NR. It is thus possible to distinguish between viable, damaged, or dead cells, which is the basis of this assay.

Healthy mammalian cells, when maintained in culture, continuously divide and multiply over time. A toxic chemical, regardless of site or mechanism of action, will interfere with this process and result in a reduction of the growth rate as reflected by cell number. Cytotoxicity is expressed as a concentration dependent reduction of the uptake of the NR after chemical exposure thus providing a sensitive, integrated signal of both cell integrity and growth inhibition.

## VI. DEFINITIONS

**A.** *Hill function*: a four parameter logistic mathematical model relating the concentration of test chemical to the response being measured in a sigmoidal shape.

$$Y = \text{Bottom} + \frac{\text{Top} - \text{Bottom}}{1 + 10^{(\text{logIC50} - X)\text{HillSlope}}}$$

where Y= response, X is the logarithm of dose (or concentration), Bottom is the minimum response, Top is the maximum response, logIC50 is logarithm of X at the response midway between Top and Bottom, and HillSlope describes the steepness of the curve.

**B**. *Documentation*: all methods and procedures will be noted in a Study Workbook; logs will be maintained for general laboratory procedures and equipment (e.g., media preparation, test chemical preparation, incubator function); all optical density data obtained from the

spectrophotometer plate reader will be saved in electronic and paper formats; all calculations of ICx values and other derived data will be in electronic and paper format; all data will be archived.

## VII. PROCEDURES

### A. Materials

#### 1. Cell Lines

BALB/c 3T3 cells, clone 31
CCL-163, LGC Reference Materials, Customer Service, Queens Road, Teddington, Middlesex, TW110LY, UK
CCL-163, American Type Culture Collection [ATCC], Manassas, VA, USA)

#### 2. Technical Equipment

[Note: Suggested brand names/vendors are listed in parentheses. Equivalents may be used.]

1) Incubator: 37ºC ± 1ºC, 90 % ± 5 % humidity, 5.0 % ± 1 % $CO_2$/air
2) Laminar flow clean bench/cabinet (standard: "biological hazard")
3) Water bath: 37ºC ± 1ºC
4) Inverse phase contrast microscope
5) Sterile glass tubes with caps (e.g., 5 mL)
6) Centrifuge (optionally: equipped with microtiter plate rotor)
7) Laboratory balance
8) 96-well plate spectrophotometer (i.e., plate reader) equipped with 540 nm ± 10 nm filter
9) Shaker for microtiter plates
10) Cell counter or hemocytometer
11) Pipetting aid
12) Pipettes, pipettors (multi-channel and single channel), dilution block
13) Cryotubes
14) Tissue culture flasks (e.g., 75 - 80 $cm^2$, 25 $cm^2$)
15) 96-well flat bottom tissue culture microtiter plates (e.g., Nunc # 167 008; Falcon tissue culture-treated)
16) pH paper (wide and narrow range)

[Note: Tissue culture flasks and microtiter plates should be prescreened to ensure that they adequately support the growth of 3T3 cells.]

#### 3. Chemicals, Media, and Sera

- Dulbecco's Modification of Eagle's Medium (DMEM) without L-Glutamine; should have high glucose [4.5gm/l] (e.g., ICN-Flow Cat. No. 12-332-54)
- L-Glutamine 200 mM (e.g., ICN-Flow # 16-801-49)
- New Born Calf Serum (NBCS or NCS) (e.g., Biochrom # SO 125)
- 0.05 % Trypsin/0.02 % EDTA solution (e.g., SIGMA T 3924, ICN-Flow, # 16891-49)
- Phosphate buffered saline (PBS) without $Ca^{2+}$ and $Mg^{2+}$(for trypsinization)

- Hanks' Balanced Salt Solution (HBSS) without $Ca^{2+}$ and $Mg^{2+}$(CMF-HBSS)
- Dulbecco's Phosphate Buffered Saline (D-PBS) [formulation containing calcium and magnesium cations; glucose optional] (for rinsing)
- Penicillin/streptomycin solution (e.g. ICN-Flow # 16-700-49)
- Neutral Red (NR) Dye – tissue culture-grade; liquid form (e.g., SIGMA N 2889); powder form (e.g., SIGMA N 4638)
- Dimethyl sulfoxide (DMSO), U.S.P. analytical grade (Store under nitrogen @ -20ºC)
- Ethanol (ETOH), U.S.P. analytical grade (100 %, non-denatured for test chemical preparation; 95 % can be used for the desorb solution)
- Glacial acetic acid, analytical grade
- Distilled $H_2O$ or any purified water suitable for cell culture (sterile)
- Sterile paper towels (for blotting 96-well plates)

[Note: Due to lot variability of NBCS/NCS, first check a lot for growth stimulating properties with 3T3 cells (approximately 20-24 h doubling time) and then reserve a sufficient amount of NBCS/NCS. May use pre-tested serum lot from Phase Ia of the validation study if the serum has been stored under appropriate conditions and shelf-life has not expired.]

## B. Preparations of Media and Solutions

[Note: All solutions (except NR stock solution, NR medium and NR desorb), glassware, pipettes, etc., shall be sterile and all procedures should be carried out under aseptic conditions and in the sterile environment of a laminar flow cabinet (biological hazard standard). All methods and procedures will be adequately documented.]

### 1. Media

DMEM (buffered with sodium bicarbonate) supplemented with (final concentrations in DMEM are quoted):

a) for freezing (Freeze Medium); contains 2X concentration of NBCS/NCS and DMSO of final freezing solution

| | |
|---|---|
| 40 % | NBCS/NCS |
| 20 % | DMSO |

b) for routine culture (Routine Culture Medium)

| | |
|---|---|
| 10 % | NBCS/NCS |
| 4 mM | Glutamine |

c) for solubility testing and test chemical dilution (Chemical Dilution Medium)

| | |
|---|---|
| 4 mM | Glutamine |
| 200 IU/mL | Penicillin |
| 200 µg/mL | Streptomycin |

d) for dilution of NR stock solution (NR Dilution Medium)

| | |
|---|---|
| 5 % | NBCS/NCS |
| 4 mM | Glutamine |
| 100 IU/mL | Penicillin |
| 100 µg/mL | Streptomycin |

[Note: The Chemical Dilution Medium with test chemical will dilute the serum concentration of the Routine Culture Medium in the test plate to 5 %. Serum proteins may mask the toxicity of the test substance, but serum cannot be totally excluded because cell growth is markedly reduced in its absence.]

Completed media formulations should be kept at approximately 2-8° C and stored for no longer than two weeks.

**2. Neutral Red (NR) Stock Solution**

The liquid tissue culture-grade stock NR Solution will be the first choice for performing the assay (e.g., SIGMA #N2889, 3.3 mg/mL). Store liquid tissue culture-grade NR Stock Solution at the storage conditions and shelf-life period recommended by the manufacturer.

If the liquid form is not available, the following formulation can be prepared.

EXAMPLE: 0.33 g NR Dye powder in 100 mL $H_2O$

The NR Stock Solution (powder in water) should be stored in the dark at room temperature for up to two months.

**3. Neutral Red (NR) Medium**

EXAMPLE:

| | |
|---|---|
| 1 mL (3.3 mg NR dye/mL) | NR Stock Solution |
| 99 mL | NR Dilution Medium (pre-warmed to 37° C) |

The final concentration of the NR Medium is 33 µg NR dye/mL.
[Note: The NR medium may be centrifuged at approximately 600 x g for 10 min (to remove NR crystals). The NR Medium shall be filtered (e.g., Millipore filtering, 0.2 – 0.45 µm pore size) to reduce NR crystals. The temperature of the NR Medium should be maintained at 37° C (e.g., in a waterbath) before adding tothe cells and will be used within 15 minutes after removing from 37° C storage. Aliquots of NR Medium can be made on the day of testing and maintained at 37° C for later use.]

**4. Ethanol/Acetic Acid Solution (NR Desorb)**

| | |
|---|---|
| 1 % | Glacial acetic acid solution |
| 50 % | Ethanol |
| 49 % | $H_2O$ |

**C. Methods**

**1. Cell Maintenance and Culture Procedures**

BALB/c 3T3 cells are routinely grown as a monolayer in tissue culture grade flasks (e.g., 75 - 80 $cm^2$) at 37ºC ± 1ºC, 90 % ± 5 % humidity, and 5.0 % ± 1 % $CO_2$/air. The cells

should be examined on a daily (i.e., on workdays) basis under a phase contrast microscope, and any changes in morphology or their adhesive properties noted in a Study Workbook.

**2. Receipt of Cryopreserved BALB/c 3T3 Cells**

Upon receipt of cryopreserved BALB/c 3T3 cells, the vial(s) of cells shall be stored in a liquid nitrogen freezer until needed.

**3. Thawing Cells**

Thaw cells by putting ampules into a water bath at 37°C ± 1ºC. Leave for as brief a time as possible.

a) Resuspend the cells in pre-warmed Routine Culture Medium and transfer into pre-warmed Routine Culture Medium in a tissue-culture flask.
b) Incubate at 37ºC ± 1ºC, 90 % ± 5 % humidity, and 5.0 % ± 1 % $CO_2$/air.
c) When the cells have attached to the bottom of the flask (within 4 to 24 h), decant the supernatant and replace with fresh pre-warmed (37ºC) medium. Culture as described above.
d) Passage at least two times before using the cells in a cytotoxicity test.

A fresh batch of frozen cells from the stock lot of cells should be thawed out and cultured approximately every two months. This period resembles a sequence of about 18 passages.

**4. Routine Culture of BALB/C 3T3 Cells**

When cells exceed 50 % confluence (but less than 80 % confluent) they should be removed from the flask by trypsinization:

a) Decant medium, rinse cultures with 5 mL PBS or Hanks' BSS (without $Ca^{2+}$, $Mg^{2+}$) per 25 $cm^2$ flask (15 mL per 75 $cm^2$ flask). Wash cells by gentle agitation to remove any remaining serum that might inhibit the action of the trypsin.
b) Discard the washing solution.
c) Add 1-2 mL trypsin-EDTA solution per 25 $cm^2$ to the monolayer for a few seconds (e.g., 15-30 seconds).
d) Remove excess trypsin-EDTA solution and incubate the cells at room temperature.
e) After 2-3 minutes (min), lightly tap the flask to detach the cells into a single cell suspension.

**5. Cell Counting**

After detaching the cells, add 0.1-0.2 mL of pre-warmed (37ºC) Routine Culture Medium/$cm^2$ to the flask (e.g., 2.5 mL for a 25 $cm^2$ flask). Disperse the monolayer by gentle trituration. It is important to obtain a single cell suspension for exact counting. Count a sample of the cell suspension obtained using a hemocytometer or cell counter (e.g., Coulter counter).

**6. Subculture of Cells**

After determination of cell number, the culture can be sub-cultured into other flasks or seeded into 96-well microtiter plates. BALB/c 3T3 cells are routinely passaged at suggested cell densities as listed in the table (approximate doubling time is 20-24 h). The individual laboratories will need to determine and adjust the final density to achieve appropriate growth.

**Table 1. Cell Densities for Subculturing**

| Days in Culture | Seeding Density (cells/cm$^2$) | Total Cells per 25 cm$^2$ flask | Total Cells per 75 cm$^2$ flask |
|---|---|---|---|
| 2 | 16800 | $4.2 \times 10^5$ | $1.26 \times 10^6$ |
| 3 | 8400 | $2.1 \times 10^5$ | $6.3 \times 10^5$ |
| 4 | 4200 | $1.05 \times 10^5$ | $3.15 \times 10^5$ |

[Note: It is important that cells have overcome the lag growth phase when they are used for the test.]

**7. Freezing Cells** (procedure required only if current stock of cells is depleted)

Stocks of BALB/c 3T3 cells can be stored in sterile, freezing tubes in a liquid nitrogen freezer. DMSO is used as a cryoprotective agent.

a) Centrifuge trypsinized cells at approximately 200 x g.
b) Suspend the cells in cold Routine Culture Medium (half the final freezing volume) so a final concentration of $1\text{-}5 \times 10^6$ cells/mL can be attained.
c) Slowly add cold Freeze Medium to the cells so that the solvent will equilibrate across the cell membranes. Bring the cell suspension to the final freezing volume. The final cell suspension will be 10 % DMSO. Aliquot the cell suspension into freezing tubes and fill to 1.8 mL.
d) Place the tubes into an insulated container (e.g., styrofoam trays) and place in a freezer (-70 to -80°C) for 24 h. This gives a freezing rate of approximately 1°C/min. The laboratory needs to ensure that the freezing protocol is applicable to the 3T3 cells and that the cells are viable when removed from cryopreservation.
e) Place the frozen tubes into liquid nitrogen for storage.

**8. Preparation of Cells for Assays**

e) Cultured cells that are going to be used in seeding the 96-well plates should be fed fresh medium the day before subculturing to the plates. On the day of plate seeding, prepare a cell suspension of $2.5 \times 10^4$ cells/mL in Routine Culture Medium. Using a multi-channel pipette, dispense 100 µl Routine Culture Medium only into the peripheral wells (blanks) of a 96-well tissue culture microtiter plate (See **Section VII.F.1**). In the remaining wells, dispense 100 µl of a cell suspension of $2.5 \times 10^4$ cells/mL (= $2.5 \times 10^3$ cells/well). The seeding density should be noted to ensure that the cells in the control wells are not overgrown after three days (i.e., 24 h incubation

in step **b** and 48 h exposure to test chemicals). Prepare one plate per chemical to be tested.

e) Incubate cells for 24 ± 1 h (37ºC ± 1ºC, 90 % ± 5 % humidity, 5.0 % ± 1 % $CO_2$/air) so that cells form a less than half confluent monolayer. This incubation period assures cell recovery and adherence and progression to exponential growth phase.

e) Examine each plate under a phase contrast microscope to assure that cell growth is relatively even across the microtiter plate. This check is performed to identify experimental and systemic cell seeding errors. Record observations in the Study Workbook.

**9. Determination of Doubling Time**

a) A cell doubling time procedure was performed on the initial lot of cells that was used in the first cell culture assays of Phase Ia of the Validation Study. The doubling time only needs to be determined in Phase Ib if there is a change in the lot of cells used. Establish cells in culture and trypsinize cells as per **Section VII.C.4** for subculture. Resuspend cells in NR Dilution Medium (5 % NBCS/NCS). Seed cells at 4200 cells/$cm^2$.

b) Seed five sets of cell culture vessels in triplicate for each cell type (e.g., 15 tissue culture dishes [60mm x 15mm]). Use appropriate volume of culture medium for the culture vessels. Note number of cells placed into each culture dish. Place dishes into the incubators (37ºC ± 1ºC, 90 % ± 5 % humidity, 5.0 % ± 1 % $CO_2$/air).

c) After 4 - 6 hours (use the same initial measurement time for each subsequent doubling time experiment), remove three culture dishes and trypsinize cells. Count cells using a cell counter or hemocytometer. Cell viability may be determined by dye exclusion (e.g., Trypan Blue) if Study Director sees a need. Use appropriate size exclusion limits if using a Coulter counter. Determine the total number of cells and document. Repeat sampling at 24 h, 48 h, 72 h, and 96 h post inoculation. Change culture medium at 72 h or sooner in remaining dishes if indicated by pH drop.

d) Plot cell concentration (per mL of medium) on a log scale against time on a linear scale. Determine lag time and population doubling time. Additional dishes and time are needed if the entire growth curve is to be determined (lag phase, log phase, plateau phase).

## D. Solubility Test

The preference of solvent for dissolving test chemicals is medium, DMSO, and then ethanol. Solubility shall be determined in a step-wise procedure that involves attempting to dissolve a test chemical at a relatively high concentration with the sequence of mechanical procedures specified in **Section VII.D.2.a.** If the chemical does not dissolve, the volume of solvent is increased so as to decrease the concentration by a factor of 10, and then the sequence of mechanical procedures in **Section VII.D.2.a** are repeated in an attempt to solubilize the chemical at the lower concentrations. For testing solubility in medium, the starting concentration is 20,000 µg/ml (i.e., 20 mg/mL) in Tier 1, but for DMSO and ethanol the starting concentration is 200,000 µg/ml (i.e., 200 mg/mL) in Tier 2. Weighing out chemical for each solvent (i.e., medium, DMSO, ethanol) can be done all at once, if convenient, but solubility testing (at each tier that calls for more than one solvent) is designed to be sequential - medium, then DMSO, then ethanol – in accordance with the solvent hierarchy (see **Figure 1**). This allows for testing to stop, rather than continue testing with less preferred solvents, if the test chemical dissolves in a more preferred solvent. For example, if a chemical is soluble in medium at a particular tier, testing may stop. Likewise, if a chemical is soluble in DMSO

at any tier, testing need not continue with ethanol. However, since the issue of primary importance is testing the solvents and concentrations of test chemical required by any one tier, sequential testing of solvents may be abandoned if the lab can test more efficiently in another way.

**1. Determination of Solubility**

a) Tier 1 begins with testing 20 mg/mL in Chemical Dilution Medium (see **Table 2**). Approximately 10 mg (10,000 µg) of the test chemical will be weighed into a glass tube and the weight will be documented. A volume of Chemical Dilution Medium, approximately 0.5 mL, will be added to the vessel so that the concentration is 20,000 µg/ml (20 mg/mL). The solution is mixed as specified in **Section VII.D.2.a.** If complete solubility is achieved in medium, then additional solubility procedures are not needed.

b) If the test chemical is insoluble in Chemical Dilution Medium, proceed to Tier 2 by adding enough medium, approximately 4.5 mL, to attempt to dissolve the chemical at 2 mg/mL by using the sequence of mixing procedures specified in **Section VII.D.2.a**. If the test chemical dissolves in Chemical Dilution Medium at 2 mg/mL, no further procedures are necessary. If the test chemical does NOT dissolve, weigh out approximately 100 mg test chemical in a second glass tube and add enough DMSO to make the total volume approximately 0.5 mL (for 200 mg/mL). In another glass tube, also add approximately 100 mg test chemical to enough ethanol to make the total volume approximately 0.5 mL (for 200 mg/mL). Mix both solutions as specified in **Section VII.D.2.a** in an attempt to solubilize the test chemical. If the chemical is soluble in either solvent, no additional solubility procedures are needed.

c) If the chemical is NOT soluble in Chemical Dilution Medium, DMSO, or ethanol at Tier 2, then continue to Tier 3 in Table 2 by adding enough solvent to increase the volume of the three Tier 2 solutions by 10 and attempt to solubilize again using the sequence of mixing procedures in **Section VII.D.2.a.** If the test chemical dissolves, no additional solubility procedures are necessary. If the test chemical does NOT dissolve, continue with Tier 4 and, if necessary, Tier 5 using DMSO and ethanol. Tier 4 begins by diluting the Tier 3 samples with DMSO or ethanol to bring the total volume to 50 mL. The mixing procedures in **Section VII.D.2.a** are again followed to attempt to solubilize the chemical. Tier 5 is performed, if necessary, by weighing out another two more samples of test chemical at ~10 mg each and adding ~50 mL DMSO or ethanol for a 200 µg/mL solution, and following the mixing procedures in **Section VII.D.2.a**.

<u>Example</u>: If complete solubility is not achieved at 20,000 µg/mL in Chemical Dilution Medium at Tier 1 using the mixing procedures specified in **Section VII.D.2.a,** then the procedure continues to Tier 2 by diluting the solution to 5 mL and mixing again as specified in **Section VII.D.2.a.** If the chemical is not soluble in Chemical Dilution Medium, two samples of ~ 100 mg test chemical are weighed to attempt to solubilize in DMSO and ethanol at 200,000 µg/mL (i.e., 200 mg/mL). Solutions are mixed following the sequence of procedures prescribed in **Section VII.D.2.a** in an attempt to dissolve. If solubility is not achieved at Tier 2, then the solutions (Chemical Dilution Medium, DMSO, and ethanol) prepared in Tier 2 are diluted by 10 so as to test 200 µg/mL in media, and 20,000 µg/mL in DMSO and

ethanol. This advances the procedure to Tier 3. Solutions are again mixed as prescribed in **Section VII.D.2.a** in an attempt to dissolve. If solubility is not achieved in Tier 3, the procedure continues to Tier 4, and to 5 if necessary (see **Figure 1** and **Table 2**).

**Table 2 Determination of Solubility in Chemical Dilution Medium, DMSO, or Ethanol**

| TIER | 1 | 2 | 3 | 4 | 5 |
|---|---|---|---|---|---|
| Total Volume Chemical Dilution Medium | 0.5 mL | 5 mL | 50 mL | | |
| Concentration of Test Chemical (Add ~10 mg to a tube. Add enough medium to equal the first volume. Dilute to subsequent volumes if necessary.) | 20,000 µg/mL (20 mg/mL) | 2,000 µg/mL (2 mg/mL) | 200 µg/mL (0.20 mg/mL) | | |
| Total Volume DMSO/Ethanol | | 0.5 mL | 5 mL | 50 mL | |
| Concentration of Test Chemical (Add ~100 mg to a large tube. Add enough DMSO or ethanol to equal the first volume. Dilute to subsequent volumes if necessary.) | | 200,000 µg/mL (200 mg/mL) | 20,000 µg/mL (20 mg/mL) | 2,000 µg/mL (2 mg/mL) | |
| Total Volume DMSO/Ethanol | | | | | 50 mL |
| Concentration of Test Chemical (Add ~10 mg to a large tube. Add enough DMSO or ethanol to equal 50 mL.) | | | | | 200 µg/mL (0.2 mg/mL) |
| Equivalent Concentration on Cells | 10,000 µg/mL (10 mg/mL) | 1000 µg/mL (1 mg/mL) | 100 µg/mL (0.1 mg/mL) | 10 µg/mL (0.01 mg/mL) | 1 µg/mL (0.001 mg/mL) |

NOTE: The amounts of test chemical weighed and Chemical Dilution Medium added may be modified from the amounts given above, provided that the targeted concentrations specified for each tier are tested.

## *Figure 1. Solubility Flow Chart*

**TIER 1**

| | |
|---|---|
| STEP 1: | 20 mg/mL test chemical (TC) in 0.5 mL Chemical Dilution Medium:<br>• if TC soluble, then **STOP**.<br>• if TC insoluble, then go to STEP 2. |

**TIER 2**

| | |
|---|---|
| STEP 2: | 2 mg/mL TC in medium – increase volume from STEP 1 by 10 (i.e., to 5 mL)<br>• if TC soluble, then **STOP**.<br>• if TC insoluble, then go to STEP 3. |
| STEP 3: | 200 mg/mL TC in DMSO<br>• if TC soluble, then **STOP**.<br>• if TC insoluble, test at 200 mg/mL in ETOH.<br>  • if TC soluble, then **STOP.**<br>  • If TC insoluble, go to STEP 4. |

**TIER 3**

| | |
|---|---|
| STEP 4: | 0.2 mg/mL TC in medium – increase volume from STEP 2 by 10 (i.e., to 50 mL)<br>• if TC soluble, then **STOP**.<br>• if TC insoluble, test at 20 mg/mL in DMSO – increase volume from STEP 3 by 10 (i.e., to 5 mL).<br>  • if TC soluble, then **STOP.**<br>  • if TC insoluble, test at 20 mg/mL in ETOH – increase volume from STEP 3 by 10 (i.e., to 5 mL).<br>  • if TC soluble, then **STOP.**<br>  • if TC insoluble, then go to STEP 5. |

**TIER 4**

| | |
|---|---|
| STEP 5: | 2 mg/mL TC in DMSO – increase volume from STEP 4 by 10 (i.e., to 50 mL)<br>• if TC soluble, then **STOP.**<br>• if TC insoluble, test at 2 mg/mL in ETOH – increase volume from STEP 4 by 10 (i.e., to 50 mL).<br>  • if TC soluble, then **STOP.**<br>  • if TC insoluble, then go to STEP 6. |

**TIER 5**

| | |
|---|---|
| STEP 6: | 0.2 mg/mL TC in 50 mL DMSO<br>• if TC soluble, then **STOP.**<br>• if TC insoluble, test at 0.2 mg/mL in 50 mL ETOH<br>  • **STOP** |

**2. Mechanical Procedures**

a) The following hierarchy of mixing procedures will be followed to dissolve the test chemical:

1) Add test chemical to solvent as in Tier 1 of **Table 2**.
2) Gently mix. Vortex the tube (1 –2 minutes).
3) If test chemical hasn't dissolved, use sonication for up to 5 minutes.
4) If sonication doesn't work, then warm solution to 37°C. This can be performed by warming 5 mL tubes in a 37°C water bath for at least 5-10 minutes before evaluating solubility. Warm larger vessels for at least 15-20 minutes in a 37°C water bath before evaluating solubility.
5) Proceed to Tier 2 (and Tiers 3-5, if necessary of Table 2 and repeat procedures 2-4).

b) The preference of solvent for dissolving test chemicals is Chemical Dilution Medium, DMSO, and then ethanol. Thus, if (all solvents for a particular tier are tested simultaneously and) a test chemical dissolves in more than one solvent, then the choice of solvent follows this hierarchy. For example, if, at any tier, a chemical is soluble in Chemical Dilution Medium and DMSO, but not ethanol, the choice of solvent would be medium. If the chemical were insoluble in medium, but soluble in DMSO and ethanol, the choice of solvent would be DMSO.

**After the lab has determined the preferred solvent for the test chemical and before proceeding to the cytotoxicity testing, the Study Director will discuss the solvent selection with the Study Management Team (SMT) of the validation study.** The SMT will relate what solvent should be used in the assay for each chemical.

## E. Preparation of Test Chemicals

[Note: Preparation under red or yellow light is recommended to preserve chemicals that degrade upon exposure to light.]

**1. Test Chemicals in Solution**

a) Allow test chemicals to equilibrate to room temperature before dissolving and diluting.

b) Prepare test chemical immediately prior to use. The solutions must not be cloudy nor have noticeable precipitate. Each stock dilution should have at least 1-2 mL total volume to ensure adequate solution for the test wells in a single 96-well plate.

c) For chemicals dissolved in DMSO or ethanol, the final DMSO or ethanol concentration for application to the cells must be 0.5 % (v/v) in the vehicle controls and in all of the eight test concentrations.

d) The stock solution for each test chemical should be prepared at the highest concentration found to be soluble in the solubility test. Thus, the highest test concentration applied to the cells in each range finding experiment is:

- 0.5 times the highest concentration found to be soluble in the solubility test, if the chemical was soluble in Chemical Dilution Medium, or
- 1/200 the highest concentration found to be soluble in the solubility test if the chemical was soluble in ethanol or DMSO.

e) The seven lower concentrations in the range finding experiment would then be prepared by successive dilutions that decrease by one log unit each. The following example illustrates the preparation of test chemical in solvent and the dilution of dissolved test chemical in Chemical Dilution Medium before application to 3T3 cells.

Example: Preparation of Test Chemical in Solvent Using a Log Dilution Scheme

If DMSO was determined to be the preferred solvent at Tier 2 of the solubility test (i.e., 200,000 µg/mL), dissolve the chemical in DMSO at 200,000 µg/mL for the chemical stock solution.

1) Label eight tubes 1 – 8. Add 0.9 mL solvent (e.g., DMSO) to tubes 2 -- 8.
2) Prepare stock solution of 200,000 µg test chemical/mL solvent in tube # 1.
3) Add 0.1 mL of 200,000 µg/mL dilution from tube #1 to tube #2 to make a 1:10 dilution in solvent (i.e., 20,000 µg/mL).
4) Add 0.1 mL of 20,000 µg/mL dilution from tube #2 to tube #3 to make another 1:10 dilution (i.e., 1:100 dilution from stock solution) in solvent (i.e., 2,000 µg/mL)
5) Continuing making serial 1:10 dilutions in the prepared solvent tubes.
6) Since each concentration is 200 fold greater than the concentration to be tested, make a 1:100 dilution by diluting 1 part dissolved chemical in each tube with 99 parts of Chemical Dilution Medium (e.g., 0.1 mL test chemical in DMSO + 9.9 mL Chemical Dilution Medium) to derive the eight 2X concentrations for application to 3T3 cells. Each 2X test chemical concentration will then contain 1 % v/v solvent. The 3T3 cells will have 0.05 mL Routine Culture Medium in the wells prior to application of the test chemical. By adding 0.05 mL of the appropriate 2X test chemical concentration to the appropriate wells, the test chemical will be diluted appropriately (e.g., highest concentration in well will be 1,000 µg/mL) in a total of 0.1 mL and the solvent concentration in the wells will be 0.5% v/v.
7) A test article prepared in Chemical Dilution Medium, DMSO, or ethanol may precipitate upon transfer into the Routine Culture Medium. The 2X dosing solutions should be evaluated for precipitates and the results will be recorded in the workbook. It will be permissible to test all of the dosing solutions in the dose range finding assay only. Doses containing test article precipitates should be avoided, and will not be used in the ICx determinations for either the range finding experiments or the definitive tests.

Document all test chemical preparations in the Study Workbook.

**2. pH of Test Chemical Solutions**

Measure the pH of the highest concentration of the test chemical in culture medium using pH paper. Document the pH and note the color of the medium for all dilutions. Do not adjust the pH.

**3. Concentrations of Test Chemical**

a) Range Finder Experiment

Test eight concentrations of the test chemical by diluting the stock solution with a constant factor covering a large range. The initial dilution series shall be log dilutions (e.g., 1:10, 1:100, 1:1000, etc.).

The data from any well that has precipitate will be excluded from any calculations.

b) Main Experiment

[Note: After the range finding assay is completed, the concentration-response experiment shall be performed three times on three different days for each chemical (i.e., one plate per day per chemical.]

Depending on the slope of the concentration-response curve estimated from the range finder, the dilution/progression factor in the concentration series of the main experiment should be smaller ($\sqrt[6]{10} = 1.47$). Cover the relevant concentration range (≥10 % and ≤ 90 % effect) preferably with three points of a graded effect, but with a minimum of two points, one on each side of the $IC_{50}$ value, avoiding too many non-cytotoxic and/or 100 %-cytotoxic concentrations. Experiments revealing less than one cytotoxic concentration on each side of the $IC_{50}$ value shall be repeated, where possible, with a smaller dilution factor. In addition, the dilution scheme shall be adjusted in subsequent replicate assays (i.e., definitive assays), if necessary, to increase the number of points on both sides of the $IC_{50}$ in the 10-90% response range. (Taking into account pipetting errors, a progression factor of 1.21 is regarded the smallest factor achievable.)

Determine which test chemical concentration is closest to the $IC_{50}$ value (e.g., 50 % cytotoxicity). Use that value as a central concentration and adjust dilutions higher and lower in equal steps for the definitive assay.

Maximum Doses to be Tested in the Main Experiments

If minimal or no cytotoxicity was measured in the dose range finding assay, a maximum dose for the main experiments will be established as follows:

- For test chemicals prepared in Chemical Dilution Medium, the highest test article concentration that may be applied to the cells in the main experiments will be either 100 mg/mL, or the maximum soluble dose. Test chemical will be weighed into a glass tube and the weight will be documented. A volume of Chemical Dilution Medium will be added to the vessel so that the concentration is 200,000 µg/mL (200 mg/mL). The solution is mixed as specified in **Section VII.D.2.a**. If complete solubility is achieved in medium, then 7 additional serial stock dosing solutions may be prepared from the 200 mg/mL 2X stock. If the test chemical is insoluble in medium at 200 mg/ml, proceed by adding medium, in small incremental amounts, to attempt to dissolve the chemical by using the sequence of mixing procedures specified in **Section VII.D.2.a**. The highest soluble stock solution will be used to prepare the 7 additional serial stock dosing solutions.

- For test chemicals prepared in either DMSO or ethanol, the highest test article concentration that may be applied to the cells in the main experiments will be either 2.5 mg/mL, or less, depending upon the maximum solubility in solvent. Test chemical will be weighed into a glass tube and the weight will be documented. A volume of the appropriate solvent (determined from the original solubility test) will be added to the vessel so that the concentration is 500,000 µg/mL (500 mg/mL). The solution is mixed as specified in **Section VII.D.2.a**. If complete solubility is achieved in the solvent, then 7 additional serial stock dosing solutions may be prepared from the 500 mg/mL 200X stock. If the test chemical is insoluble in solvent at 500 mg/ml, proceed by adding solvent, in small incremental amounts, to attempt to dissolve the chemical by using the sequence of mixing procedures specified in **Section VII.D.2.a**. The highest soluble stock solution will be used to prepare the 7 additional serial stock dosing solutions.

c) Test Chemical Dilutions

The dosing factor of 3.16 (= $\sqrt[2]{10}$) divides a log into two equidistant steps, a factor of 2.15 (= $\sqrt[3]{10}$) divides a decade into three steps. The factor of 1.47 (= $\sqrt[6]{10}$) divides a log into six equidistant steps, and the factor of 1.21 (= $\sqrt[12]{10}$) divides the log into 12 steps.

EXAMPLE:

| | | | | | | | | | | | | |
|---|---|---|---|---|---|---|---|---|---|---|---|---|
| 10 | | | | | | 31.6 | | | | | | 100 |
| 10 | | | | 21.5 | | | | 46.4 | | | | 100 |
| 10 | | 14.7 | | 21.5 | | 31.6 | | 46.4 | | 68.1 | | 100 |
| 10 | 12.1 | 14.7 | 17.8 | 21.5 | 26.1 | 31.6 | 38.3 | 46.4 | 56.2 | 68.1 | 82.5 | 100 |

The technical production of decimal geometric concentration series is simple. An example is given for factor 1.47:

*Dilute 1 volume of the highest concentration by adding 0.47 volumes of diluent. After equilibration, dilute 1 volume of this solution by adding 0.47 volumes of diluent...(etc.).*

## F. Test Procedure

### 1. 96-Well Plate Configuration

The 3T3 NRU assay for test chemicals will use the 96-well plate configuration shown in **Figure 2**.

***Figure 2. 96-Well Plate Configuration for Positive Control and Test Chemical Assays***

| | 1 | 2 | 3 | 4 | 5 | 6 | 7 | 8 | 9 | 10 | 11 | 12 |
|---|---|---|---|---|---|---|---|---|---|---|---|---|
| A | b | b | b | b | b | b | b | b | b | b | b | b |
| B | b | VC | $C_1$ | $C_2$ | $C_3$ | $C_4$ | $C_5$ | $C_6$ | $C_7$ | $C_8$ | VC | b |
| C | b | VC | $C_1$ | $C_2$ | $C_3$ | $C_4$ | $C_5$ | $C_6$ | $C_7$ | $C_8$ | VC | b |
| D | b | VC | $C_1$ | $C_2$ | $C_3$ | $C_4$ | $C_5$ | $C_6$ | $C_7$ | $C_8$ | VC | b |
| E | b | VC | $C_1$ | $C_2$ | $C_3$ | $C_4$ | $C_5$ | $C_6$ | $C_7$ | $C_8$ | VC | b |
| F | b | VC | $C_1$ | $C_2$ | $C_3$ | $C_4$ | $C_5$ | $C_6$ | $C_7$ | $C_8$ | VC | b |
| G | b | VC | $C_1$ | $C_2$ | $C_3$ | $C_4$ | $C_5$ | $C_6$ | $C_7$ | $C_8$ | VC | b |
| H | b | b | b | b | b | b | b | b | b | b | b | b |

VC = untreated VEHICLE CONTROL (mean viability set to 100 %)
$C_1 – C_8$ = Test Chemicals or Positive Control (SLS) at eight concentrations (C1 = highest, C8 = lowest)
b = BLANKS (contain **no** cells)

**2. Application of Test Chemical**

a) Two optional methods for rapidly applying the 2X dosing solutions onto the 96-well plates may be utilized. The first method is to add each of the 2X dosing solutions into labeled, sterile reservoirs (e.g., Corning/Costar model 4870 sterile polystyrene 50 mL reagent reservoirs and/or Corning/Transtar model 4878 disposable reservoir liners, 8-channel). The second method utilizes a "dummy" plate (i.e., an empty sterile 96-well plate) prepared to hold the dosing solutions immediately prior to treatment of the test plate (with cells). The test chemical and control dosing solutions should be dispensed into the dummy plate in the same pattern/order as will be applied to the plate containing cells. More volume than needed for the test plate (i.e. greater than 50 µl/well) should be in the wells of the dummy plate. At the time of treatment initiation, a multi-channel micropipettor is used to transfer the 2X dosing solutions, from the reservoirs or dummy plate, to the appropriate wells on the treatment plate (as described in step c. below). These methods will ensure that the dosing solutions can be transferred rapidly to the appropriate wells of the test plate to initiate treatment times and to minimize the range of treatment initiation times across a large number of treatment plates, and to prevent "out of order" dosing.

b) After 24 h ± 1 h incubation of the cells, remove Routine Culture Medium from the cells by careful inversion of the plate (i.e., "dump") over an appropriate receptacle. Gently blot the plate on a sterile paper towel so that the monolayer is minimally disrupted. Do not use automatic plate washers for this procedure nor vacuum aspiration.

c) Immediately add 50 µL of fresh pre-warmed Routine Culture Medium to all of the wells, including the blanks. Add 50 µL of Chemical Dilution Medium to the blank wells. Then add 50 µL Chemical Dilution Medium containing either the appropriate

concentration of test chemical, the PC, or the VC (see **Figure 2** for the plate configuration). The solutions will be transferred from the dummy plate to the test plate by adding the vehicle control first then lowest to highest dose so that the same pipette tips on the eight channel pipettor can be used for the whole plate.

d) Incubate cells for 48 h ± 0.5 h (37ºC ± 1ºC, 90 % ± 5 % humidity, and 5.0 % ± 1 % $CO_2$/air).

e) **Positive Control**: For each set of test chemical plates used in an assay, a separate plate of positive control concentrations will be set up following the concentration range established in the development of the positive control database in Phase Ia of the Validation Study. The mean $IC_{50}$ and ± two standard deviations (SD) of the $IC_{50}$ of SLS (mutually agreed upon by the Testing Facility and the SMT) are the values that will be used as an acceptance criterion for test sensitivity for the 3T3 NRU assay. This plate will follow the same schedule and procedures as used for the test chemical plates.

**3. Microscopic Evaluation**

After at least 46 h treatment, examine each plate under a phase contrast microscope to identify systematic cell seeding errors and growth characteristics of control and treated cells. Record any changes in morphology of the cells due to the cytotoxic effects of the test chemical, but do not use these records for any quantitative measure of cytotoxicity. Undesirable growth characteristics of control cells may indicate experimental error and may be cause for rejection of the assay. Use the following Visual Observations Codes in the description of cell culture conditions.

**Visual Observations Codes**

| Note Code | Note Text |
|---|---|
| | |
| 1 | Normal Cell Morphology |
| 2 | Low Level of Cell Toxicity |
| 3 | Moderate Level of Cell Toxicity |
| 4 | High level of Cell Toxicity |
| 1P | Normal Cell Morphology with Precipitate |
| 2P | Low Level of Cell Toxicity with Precipitate |
| 3P | Moderate Level of Cell Toxicity with Precipitate |
| 4P | High level of Cell Toxicity with Precipitate |
| 5P | Unable to View Cells Due to Precipitate |

**4. Measurement of NRU**

a) Carefully remove (i.e., "dump") the medium with test chemical and rinse the cells very carefully with 250 µL pre-warmed D-PBS. Remove the rinsing solution by dumping and remove excess by gently blotting on sterile paper towels. Add 250 µL NR medium (to all wells including the blanks) and incubate (37ºC ± 1ºC, 90 % ± 5 % humidity, and 5.0 % ± 1 % $CO_2$/air) for 3±0.1 h. Observe the cells briefly during the NR incubation (e.g., at 1, 2, and 3 h – Study Director's discretion) for NR crystal formation. Record observations in the Study Workbook. Study Director can decide to reject the experiment if excessive NR crystallization has occurred.

b) After incubation, remove the NR medium, and carefully rinse cells with 250 µl pre-warmed D-PBS.

c) Decant and blot D-PBS from the plate.
d) Add exactly 100 µl NR Desorb (ETOH/acetic acid) solution to all wells, including blanks.
e) Shake microtiter plate rapidly on a microtiter plate shaker for 20 – 45 min to extract NR from the cells and form a homogeneous solution.
f) Measure the absorption (within 60 minutes of adding NR Desorb solution) of the resulting colored solution at 540 nm ± 10 nm in a microtiter plate reader (spectrophotometer), using the blanks as a reference. [Phase Ia data show the mean OD value for the plate blanks to be 0.051 ± 0.022 for 3T3 cells (± two standard deviations; data from 3 labs; N = 59). Use this value as a **guide** for assessment of the blank values.] Save raw data in the Excel format as provided by the SMT.

**5. Quality Check of 3T3 NRU Assay**

a) Test Acceptance Criteria

1) A test meets acceptance criteria, if the $IC_{50}$ for SLS (PC) is within ± two (2) standard deviations of the historical mean established by the Test Facility (as per **VII.F.2.e**).
2) A test meets acceptance criteria if the corrected mean $OD_{540}$ of VCs is ≥ 0.30 and ≤ 0.80.
3) A test meets acceptance criteria if the left and the right mean of the VCs do not differ by more than 15 % from the mean of all VCs.
4) A test meets acceptance criteria if a minimum of two points, one on each side of the $IC_{50}$ value, are determined and fall within the range ≥10 % and ≤ 90 % effect.

[Note: All acceptance criteria must be met for an assay to be considered acceptable.]

b) Checks for Systematic Cell Seeding Errors

To check for systematic cell seeding errors, untreated VCs are placed both at the left side (row 2) and the right side (row 11 for the test plates) of the 96-well plate. Aberrations in the cell monolayer for the VCs may reflect a volatile and toxic test article present in the assay.

Checks for cell seeding errors may also be performed by examining each plate under a phase contrast microscope to assure that cell quantity is consistent.

c) Quality Check of Concentration-Response

The $IC_{50}$ derived from the concentration-response of the test chemicals will be backed by preferably three responses ≥ 10 % and ≤ 90 % inhibition of NRU and at least two responses, one on either side of the $IC_{50}$ value (see **VII.E.3.b**). If this is not the case, and the concentration progression factor can be easily reduced, reject the experiment and repeat it with a smaller progression factor. In addition, the dilution scheme shall be adjusted in subsequent replicate assays, if necessary, to increase the number of points on both sides of the $IC_{50}$ in the 10-90% response range. Numerical scoring of the cells (see **VII.F.3**) should be determined and documented in the Study Workbook.

### G. Data Analysis

A calculation of cell viability expressed as NRU is made for each concentration of the test chemical by using the mean NRU of the six replicate values (minimum of four acceptable replicate well) per test concentration (blanks will be subtracted). This value is compared with the mean NRU of all VC values (provided VC values have met the VC acceptance criteria). Relative cell viability is then expressed as percent of untreated VC. If achievable, the eight concentrations of each chemical tested will span the range of no effect up to total inhibition of cell viability. Data from the microtiter plate reader shall be transferred to the Excel® spreadsheet provided by the SMT for determining cell viability and performing statistical analyses.

The concentration of a test chemical reflecting a 20 %, 50 %, and 80 % inhibition of cell viability (i.e., the $IC_{20}$, $IC_{50}$, and $IC_{80}$) is determined from the concentration-response by applying a Hill function to the concentration-response data. Statistical software (e.g., GraphPad PRISM® 3.0) specified by the SMT shall be used to calculate $IC_{20}$, $IC_{50}$, and $IC_{80}$ values (and the associated confidence limits) for each test chemical. In addition, the SMT shall provide guidelines for calculating ICx values and confidence limits. The Testing Facility shall report data using at least three (3) significant figures and shall forward the results from each assay to the SMT/biostatistician through the designated contacts in electronic format and hard copy upon completion of testing. The SMT will be directly responsible for the statistical analyses of the Validation Study data.

## VIII. REFERENCES

Hackenberg, U. and H. Bartling. 1959. Messen und Rechnen im pharmakologischen Laboratorium mit einem speziellen Zahlensystem (WL24-System). Arch. Exp. Pathol. Pharmakol. 235: 437-463.

Spielmann, H., S. Gerner, S. Kalweit, R. Moog, T. Wirnserberger, K. Krauser, R. Kreiling, H. Kreuzer, N.P. Luepke, H.G. Miltenburger, N. Müller, P. Murmann, W. Pape, B. Siegmund, J. Spengler, W. Steiling, and F.J. Wiebel. 1991. Interlaboratory assessment of alternatives to the Draize eye irritation test in Germany. Toxicol. *In Vitro* 5: 539-542.

## IX. APPROVAL

_____ _____

**SPONSOR REPRESENTATIVE** **DATE**
**(Print or type name)**

_____ _____

**Test Facility STUDY DIRECTOR** **DATE**
**(Print or type name)**

# Appendix C4

## Test Method Protocol for the Normal Human Epidermal Keratinocyte (NHK) Neutral Red Uptake Cytotoxicity Test (Phase Ib)

***[This Page Intentionally Left Blank]***

# TEST METHOD PROTOCOL
# for the NHK Neutral Red Uptake Cytotoxicity Test

**A Test for Basal Cytotoxicity for an In Vitro Validation Study**
**Phase Ib**

**November 15, 2002**
**Revised November 22, 2002**
Revised by IIVS Nov. 26, 2002

**Prepared by**

**The National Toxicology Program (NTP) Interagency Center for the Evaluation of Alternative Toxicological Methods (NICEATM)**

**Based on Standard Operating Procedure Recommendations from an International Workshop Organized by the Interagency Coordinating Committee on the Validation of Alternative Methods (ICCVAM)**

**National Institute of Environmental Health Sciences (NIEHS)**
**National Institutes of Health (NIH)**
**U.S. Public Health Service**
**Department of Health and Human Services**

# TEST METHOD PROTOCOL

## The Normal Human Keratinocyte (NHK) Neutral Red Uptake Cytotoxicity Test
## A Test for Basal Cytotoxicity
## Phase Ib

### I. PURPOSE

The purpose of this study is to evaluate the cytotoxicity of test chemicals using the Normal Human Keratinocyte (NHK) Neutral Red Uptake (NRU) cytotoxicity test. The data will be used to evaluate the intra- and inter-laboratory reproducibility of the assay and effectiveness of the cytotoxicity assay to predict the starting doses for rodent acute oral systemic toxicity assays. This test method protocol outlines the procedures for performing the cytotoxicity test and is in support of the *in vitro* validation study organized by NICEATM and the European Centre for the Validation of Alternative Methods (ECVAM) and sponsored by NIEHS, U.S. Environmental Protection Agency, and ECVAM. This test method protocol applies to all personnel involved with performing the cytotoxicity assay.

#### A. NHK Neutral Red Uptake Cytotoxicity Test

The NHK NRU test will be performed to analyze the *in vitro* toxicity of three (3) blinded/coded test chemicals. This test will be used to determine $IC_{20}$, $IC_{50}$, and $IC_{80}$ values for the predetermined set of test chemicals of varying toxicities.

### II. SPONSOR

**A. Name**: National Institute of Environmental Health Sciences (NIEHS); The National Toxicology Program (NTP) Interagency Center for the Evaluation of Alternative Toxicological Methods (NICEATM)

**B. Address**: P.O. Box 12233
Research Triangle Park, NC 27709

**C. Representative**: *Named Representative*

### III. IDENTIFICATION OF TEST AND CONTROL SUBSTANCES

**A. Test Chemicals**: *Blinded chemicals (3)*

**B. Controls**:

| | |
|---|---|
| Positive: | Sodium Lauryl Sulfate |
| Vehicle (Negative): | Assay medium |
| Solvent (as needed): | Assay medium with appropriate solvent used to prepare the test chemicals (**Section VII.E**) |

### IV. TESTING FACILITY AND KEY PERSONNEL

- Name:
- Address:

- Study Director:
- Laboratory Technician(s):
- Scientific Advisor:
- Quality Assurance Director:
- Safety Manager:
- Facility Management:

**A. Test Schedule**

1. Proposed Experimental Initiation Date:
2. Proposed Experimental Completion Date:
3. Proposed Report Date:

## V. TEST SYSTEM

The NRU cytotoxicity assay procedure is a cell survival/viability chemosensitivity assay based on the ability of viable cells to incorporate and bind neutral red (NR), a supravital dye. NR is a weak cationic dye that readily penetrates cell membranes by non-ionic diffusion and accumulates intracellularly in lysosomes. Alterations of the cell surface or the sensitive lysosomal membrane lead to lysosomal fragility and other changes that gradually become irreversible. Such changes brought about by the action of xenobiotics result in a decreased uptake and binding of NR. It is thus possible to distinguish between viable, damaged, or dead cells, which is the basis of this assay.

Healthy mammalian cells, when maintained in culture, continuously divide and multiply over time. A toxic chemical, regardless of site or mechanism of action, will interfere with this process and result in a reduction of the growth rate as reflected by cell number. Cytotoxicity is expressed as a concentration dependent reduction of the uptake of the NR after chemical exposure thus providing a sensitive, integrated signal of both cell integrity and growth inhibition.

## VI. DEFINITIONS

**A.**. *Hill function*: a four parameter logistic mathematical model relating the concentration of test chemical to the response being measured in a sigmoidal shape.

$$Y = \text{Bottom} + \frac{\text{Top} - \text{Bottom}}{1 + 10^{(\text{logIC50} - X)\text{HillSlope}}}$$

where Y= response, X is the logarithm of dose (or concentration), Bottom is the minimum response, Top is the maximum response, logIC50 is logarithm of X at the response midway between Top and Bottom, and HillSlope describes the steepness of the curve.

**B.** *Documentation*: all methods and procedures will be noted in a Study Workbook; logs will be maintained for general laboratory procedures and equipment (e.g., media preparation, test chemical preparation, incubator function); all optical density data obtained from the spectrophotometer plate reader will be saved in electronic and paper formats; all calculations of ICx values and other derived data will be in electronic and paper format; all data will be archived.

## VII. PROCEDURES

### A. Materials

[Note: Suggested brand names/vendors are listed in parentheses. Equivalents may be used unless otherwise noted.]

#### 1. Cell Lines

**Normal Human Epidermal Keratinocytes (NHK)**

Non-transformed cells; from cryopreserved primary or secondary cells (**Clonetics #CC-2507 or equivalent).** Cells will be Clonetics NHK cells.

*Cambrex* [Cambrex Bio Science, 8830 Biggs Ford Road, Walkersville, MD 21793-0127

*Cambrex Europe* [Cambrex Bio Science Verviers, S.P.R.L. Parc Industriel de Petit Rechain, B-4800 Verviers, BELGIUM]

#### 2. Technical Equipment

[Note: Suggested brand names/vendors are listed in parentheses. Equivalents may be used.]

a) Incubator: 37ºC ± 1ºC, 90 % ± 5 % humidity, 5.0 % ± 1 % $CO_2$/air
b) Laminar flow clean bench (standard: "biological hazard")
c) Water bath: 37ºC ± 1ºC
d) Inverse phase contrast microscope
e) Sterile glass tubes with caps (e.g., 5mL)
f) Centrifuge (optionally: equipped with microtiter plate rotor)
g) Laboratory balance
h) 96-well plate spectrophotometer (i.e., plate reader) equipped with 540 nm ± 10 nm filter
i) Shaker for microtiter plates
j) Cell counter or hemocytometer
k) Pipetting aid
l) Pipettes, pipettors (multi-channel and single channel), dilution block
m) Cryotubes
n) Tissue culture flasks (75 - 80 $cm^2$, 25 $cm^2$)
o) 96-well flat bottom tissue culture microtiter plates (e.g., Nunc # 167 008; Corning/COSTAR tissue culture-treated)
p) pH paper (wide and narrow range)

[Note: Tissue culture flasks and microtiter plates should be prescreened to ensure that they adequately support the growth of NHK.]

#### 3. Chemicals, Media, and Sera

a) Keratinocyte Basal Medium without $Ca^{++}$ (KBM®, Clonetics CC-3104) that is completed by adding the KBM® SingleQuots® (Clonetics CC-4131) to achieve the proper concentrations of epidermal growth factor, insulin, hydrocortisone,

antimicrobial agents, bovine pituitary extract, and calcium (e.g., Clonetics Calcium SingleQuots®, 300 mM $CaCl_2$, Clonetics # CC-4202).

b) HEPES Buffered Saline Solution (HEPES-BSS) (e.g., Clonetics # CC-5022)
c) 0.025 % Trypsin/EDTA solution (e.g., Clonetics # CC-5012)
d) Trypsin Neutralizing Solution (TNS) (e.g., Clonetics # CC-5002)
e) Phosphate Buffered Saline (PBS)
f) Dulbecco's Phosphate Buffered Saline (D-PBS) [formulation containing calcium and magnesium cations; glucose optional] (for rinsing)
g) Neutral Red (NR) Dye – tissue culture-grade; liquid form (e.g., SIGMA N 2889); powder form (e.g., SIGMA N 4638)
h) Dimethyl sulfoxide (DMSO), U.S.P analytical grade (Store under nitrogen @ -20ºC)
i) Ethanol (ETOH), U.S.P. analytical grade (100 %, non-denatured for test chemical preparation; 95 % can be used for the desorb solution)
j) Glacial acetic acid, analytical grade
k) Hanks' Balanced Salt Solution without $Ca^{2+}$ or $Mg^{2+}$ (CMF-HBSS) (e.g., Invitrogen # 14170)
l) Distilled $H_2O$ or any purified water suitable for cell culture (sterile)
m) Sterile paper towels (for blotting 96-well plates)

## B. Preparations of Media and Solutions

[Note: All solutions (except NR stock solution, NR medium and NR desorb), glassware, pipettes, etc., shall be sterile and all procedures should be carried out under aseptic conditions and in the sterile environment of a laminar flow cabinet (biological hazard standard). ). All methods and procedures will be adequately documented.]

### 1. Media

a) Routine Culture Medium/Treatment Medium

KBM® (Clonetics CC-3104) supplemented with KBM® SingleQuots® (Clonetics CC-4131) and Clonetics Calcium SingleQuots® (CC-4202) to make 500 mL medium. Final concentration of supplements in medium are:

| | |
|---|---|
| 0.0001 ng/mL | Human recombinant epidermal growth factor |
| 5 µg/mL | Insulin |
| 0.5 µg/mL | Hydrocortisone |
| 30 µg/mL | Gentamicin |
| 15 ng/mL | Amphotericin B |
| 0.10 mM | Calcium |
| 30 µg/mL | Bovine pituitary extract |

*Complete media should be kept at 2-8°C and stored for no longer than two weeks*.

NOTE:
KBM® SingleQuots® contain the following stock concentrations and volumes:

| | | |
|---|---|---|
| 0.1 ng/mL | hEGF | 0.5 mL |
| 5.0 mg/mL | Insulin | 0.5 mL |
| 0.5 mg/mL | Hydrocortisone | 0.5 mL |

| | | |
|---|---|---|
| 30 mg/mL | Gentamicin, 15 ug/mL Amphotericin-B | 0.5 mL |
| 7.5 mg/mL | Bovine Pituitary Extract (BPE) | 2.0 mL |

Clonetics Calcium SingleQuots® are 2 mL of 300mM calcium.

165 ul of solution per 500 mL calcium-free medium equals 0.10 mM calcium in the medium.

**2. Neutral Red (NR) Stock Solution**

The liquid tissue culture-grade stock NR Solution will be the first choice for performing the assay (e.g., SIGMA #N2889, 3.3 mg/mL). Store liquid tissue culture-grade NR Stock Solution at the storage conditions and shelf-life period recommended by the manufacturer.

If the liquid form is not available, the following formulation can be prepared.

EXAMPLE: 0.33 g NR Dye powder in 100 mL $H_2O$

The NR Stock Solution (powder in water) should be stored in the dark at room temperature for up to two months.

**3. Neutral Red (NR) Medium**

EXAMPLE:

| | |
|---|---|
| 1 mL (3.3 mg NR dye/mL) | NR Stock Solution |
| 99 mL | Routine Culture Medium (pre-warmed to 37° C.) |

The final concentration of the NR Medium is 33 μg NR dye/mL.
[Note: The NR medium may be centrifuged at approximately 600 x g for 10 min (to remove NR crystals). The NR Medium shall be filtered (e.g., Millipore filtering, 0.2 – 0.45 μm pore size) used to reduce NR crystals. The temperature of the NR Medium should be maintained at 37° C (e.g., in a waterbath) before adding to the cells and will be used within 15 minutes after removing from 37° C storage. Aliquots of NR Medium can be made on the day of testing and maintained at 37° C. for later use.]

**4. Ethanol/Acetic Acid Solution (NR Desorb)**

| | |
|---|---|
| 1 % | Glacial acetic acid solution |
| 50 % | Ethanol |
| 49 % | $H_2O$ |

**C. Methods**

**1. Cell Maintenance and Culture Procedures**

NHK cells are routinely grown as a monolayer in tissue culture grade flasks (e.g., 25 $cm^2$) at 37ºC ± 1ºC, 90 % ± 5 % humidity, and 5.0 % ± 1 % $CO_2$/air. The cells should be

examined on a daily (i.e., on workdays) basis under a phase contrast microscope, and any changes in morphology or their adhesive properties must be noted in a Study Workbook.

**2. Receipt of Cryopreserved Keratinocytes**

Upon receipt of cryopreserved keratinocytes, the vial(s) of cells shall be stored in a liquid nitrogen freezer until needed.

**3. Thawing Cells and Establishing Cell Cultures**

a) Thaw cells by putting ampules into a water bath at 37°C for as brief a time as possible. Do not thaw cells at room temperature or by hand. Seed the thawed cells into culture flasks as quickly as possible and with minimal handling.
b) Slowly (taking approximately 1-2 min) add 9 mL of pre-warmed Routine Culture Medium to the cells suspended in the cryoprotective solution and transfer cells into flasks containing pre-warmed Routine Culture Medium (See Table 1).
c) Incubate the cultures at 37ºC ± 1ºC, 90 % ± 5 % humidity, 5.0 % ± 1 % $CO_2$/air until the cells attach to the flask (within 4 to 24 h), at which time the Routine Culture Medium should be removed and replaced with fresh Routine Culture Medium.
d) Unless otherwise specified, the cells should be incubated at 37ºC ± 1ºC, 90 % ± 5 % humidity, 5.0 % ± 1 % $CO_2$/air and fed every 2-3 days until they exceed 50 % confluence (but less than 80 % confluent).

**Table 1. Establishing Cell Cultures**

| Cells/25 $cm^2$ flask (in approximately 5 mL) 1 flask each cell concentration | $6.25 \times 10^4$ ($2500/cm^2$) | $1.25 \times 10^5$ ($5000/cm^2$) | $2.25 \times 10^5$ ($9000/cm^2$) |
|---|---|---|---|
| Approximate Time to Subculture | 96+ hours | 72 - 96 hours | 48 - 72 hours |
| Cells to 96-Well Plates | 6 – 8 plates | 6 – 8 plates | 6 – 8 plates |

Cell growth guidelines – actual growth of individual cell lots may vary.

**4. Subculture of NHK Cells to 96-Well Plates**

[Note: It is important that cells have overcome the lag growth phase when they are used for the test. Keratinocytes will be passaged only into the 96-well plates and will not be subcultured into flasks for use in later assays]

a) When the keratinocyte culture in a 25 $cm^2$ flask exceeds 50 % confluence (but less than 80 % confluent), remove the medium and rinse the culture twice with 5 mL HEPES-BSS. The second rinse should be left on the cells for approximately 5 minutes. Discard the washing solution.
b) Add 2 mL trypsin/EDTA solution to each flask and remove after 15 to 30 seconds. Incubate the flask at room temperature for 3 to 7 min. When more than 50 % of the cells become dislodged, rap the flask sharply against the palm of the hand.
c) When most of the cells have become detached from the surface, rinse the flask with 5 mL of room temperature TNS. If more than one flask is subcultured, the same 5 mL of TNS may be used to rinse a total of up to 2 flasks.

d) Then rinse the flask with 5 mL CMF-HBSS and transfer the cell suspension to a centrifuge tube.
e) Pellet the cells by centrifugation for 5 min at approximately 220 x g. Remove the supernatant by aspiration.
f) Resuspend the keratinocyte pellet by gentle trituration (to have single cells) in Routine Culture Medium. It is important to obtain a single cell suspension for exact counting. Count a sample of the cell suspension using a hemocytometer or cell counter.
g) Prepare a cell suspension –1.6 – 2.0 $x10^4$ cells/mL in Routine Culture Medium. Using a multi-channel pipette, dispense 250 µl Routine Culture Medium only into the peripheral wells (blanks) of a 96-well tissue culture microtiter plate. In the remaining wells, dispense 125 µl of the cell suspension ($2x10^3$ – $2.5x10^3$ cells/well). Prepare one plate per chemical to be tested (see **Figure 2**, **Section VII.F.1**).
h) Incubate cells (37ºC ± 1ºC, 90 % ± 5.0 % humidity, and 5 % ± 1 % $CO_2$/air) so that cells form a 20+ % monolayer (~48-72 h). This incubation period assures cell recovery and adherence and progression to exponential growth phase.
i) Examine each plate under a phase contrast microscope to assure that cell growth is relatively even across the microtiter plate. This check is performed to identify experimental and systemic cell seeding errors. Record observations in the Study Workbook.

**5. Determination of Doubling Time**

a) A cell doubling time procedure was performed on the initial lot of cells that was used in the first cell culture assays of Phase Ia of the Validation Study. The doubling time only needs to be determined in Phase Ib if there is a change in the lot of cells used. Establish cells in culture and trypsinize cells as per **Section VII.C.4** for subculture. Resuspend cells in appropriate culture medium. Use **Table 1** to determine seeding densities.
b) Seed five sets of cell culture vessels in triplicate for each cell type (e.g., 15 tissue culture dishes [60mm x 15mm]). Use appropriate volume of culture medium for the culture vessels. Note number of cells placed into each culture dish. Place dishes into the incubators (37ºC ± 1ºC, 90 % ± 5 % humidity, 5.0 % ± 1 % $CO_2$/air).
c) After 4-6 hours (use the same initial measurement time for each subsequent doubling time experiment), remove three culture dishes and trypsinize cells. Count cells using a cell counter or hemocytometer. Cell viability may be determined by dye exclusion (e.g., Trypan Blue). Determine the total number of cells and document. Repeat sampling at 24 hr, 48 hr, 72 hr, and 96 hr post inoculation. Change culture medium at 72 hr or sooner in remaining dishes if indicated by pH drop.
d) Plot cell concentration (per mL of medium) on a log scale against time on a linear scale. Determine lag time and population doubling time. The doubling time will be in the log (exponential) phase of the growth curve. Additional dishes and time are needed if the entire growth curve is to be determined (lag phase, log phase, plateau phase).

**D. Solubility Test**

The preference of solvent for dissolving test chemicals is medium, DMSO, and then ethanol. Solubility shall be determined in a step-wise procedure that involves attempting to dissolve a test chemical at a relatively high concentration with the sequence of mechanical procedures specified in **Section VII.D.2.a.** If the chemical does not dissolve, the volume of solvent is

increased so as to decrease the concentration by a factor of 10, and then the sequence of mechanical procedures in **Section VII.D.2.a** are repeated in an attempt to solubilize the chemical at the lower concentrations. For testing solubility in media, the starting concentration is 20,000 μg/ml (i.e., 20 mg/mL) in Tier 1, but for DMSO and ethanol the starting concentration is 200,000 μg/ml (i.e., 200 mg/mL) in Tier 2. Weighing out chemical for each solvent (i.e., media, DMSO, ethanol) can be done all at once, if convenient, but solubility testing (at each tier that calls for more than one solvent) is designed to be sequential - media, then DMSO, then ethanol – in accordance with the solvent hierarchy (see **Figure 1**). This allows for testing to stop, rather than continue testing with less preferred solvents, if the test chemical dissolves in a more preferred solvent. For example, if a chemical is soluble in medium at a particular tier, testing may stop. Likewise, if a chemical is soluble in DMSO at any tier, testing need not continue with ethanol. However, since the issue of primary importance is testing the solvents and concentrations of test chemical required by any one tier, sequential testing of solvents may be abandoned if the lab can test more efficiently in another way.

**1. Determination of Solubility**

a) Tier 1 begins with testing 20 mg/mL in Routine Culture Medium (see **Table 2**). Approximately 10 mg (10,000 μg) of the test chemical will be weighed into a glass tube and the weight will be documented. A volume of Routine Culture Medium, approximately 0.5 mL, will be added to the vessel so that the concentration is 20,000 μg/ml (20 mg/mL). The solution is mixed as specified in **Section VII.D.2.a.** If complete solubility is achieved in media, then additional solubility procedures are not needed.

b) If the test chemical is insoluble in medium, proceed to Tier 2 by adding enough medium, approximately 4.5 mL, to attempt to dissolve the chemical at 2 mg/mL by using the sequence of mixing procedures specified in **Section VII.D.2.a**. If the test chemical dissolves in medium at 2 mg/mL, no further procedures are necessary. If the test chemical does NOT dissolve, weigh out approximately 100 mg test chemical in a second glass tube and add enough DMSO to make the total volume approximately 0.5 mL (for 200 mg/mL). In another glass tube, also add approximately 100 mg test chemical to enough ethanol to make the total volume approximately 0.5 mL (for 200 mg/mL). Mix both solutions as specified in **Section VII.D.2.a** in an attempt to solubilize the test chemical. If the chemical is soluble in either solvent, no additional solubility procedures are needed.

**Table 2 Determination of Solubility in Routine Culture Medium, DMSO, or Ethanol**

| TIER | 1 | 2 | 3 | 4 | 5 |
|---|---|---|---|---|---|
| Total Volume Medium | 0.5 mL | 5 mL | 50 mL | | |
| Concentration of Test Chemical (Add ~10 mg to a tube. Add enough medium to equal the first volume. Dilute to subsequent volumes if necessary.) | 20,000 µg/mL (20 mg/mL) | 2,000 µg/mL (2 mg/mL) | 200 µg/mL (0.20 mg/mL) | | |
| Total Volume DMSO/Ethanol | | 0.5 mL | 5 mL | 50 mL | |
| Concentration of Test Chemical (Add ~100 mg to a large tube. Add enough DMSO or ethanol to equal the first volume. Dilute to subsequent volumes if necessary.) | | 200,000 µg/mL (200 mg/mL) | 20,000 µg/mL (20 mg/mL) | 2,000 µg/mL (2 mg/mL) | |
| Total Volume DMSO/Ethanol | | | | | 50 mL |
| Concentration of Test Chemical (Add ~10 mg to a large tube. Add enough DMSO or ethanol to equal 50 mL.) | | | | | 200 µg/mL (0.2 mg/mL) |
| Equivalent Concentration on Cells | 10,000 µg/mL (10 mg/mL) | 1000 µg/mL (1 mg/mL) | 100 µg/mL (0.1 mg/mL) | 10 µg/mL (0.01 mg/mL) | 1 µg/mL (0.001 mg/mL) |

c) If the chemical is NOT soluble in media, DMSO, or ethanol at Tier 2, then continue to Tier 3 in **Table 2** by adding enough solvent to increase the volume of the three Tier 2 solutions by 10 and attempt to solubilize again using the sequence of mixing procedures in **Section VII.D.2.a.** If the test chemical dissolves, no additional solubility procedures are necessary. If the test chemical does NOT dissolve, continue with Tier 4 and, if necessary, Tier 5 using DMSO and ethanol. Tier 4 begins by diluting the Tier 3 samples with DMSO or ethanol to bring the total volume to 50 mL. The mixing procedures in **Section VII.D.2.a** are again followed to attempt to solubilize the chemical. Tier 5 is performed, if necessary, by weighing out another two more samples of test chemical at ~10 mg each and adding ~50 mL DMSO or ethanol for a 200 µg/mL solution, and following the mixing procedures in **Section VII.D.2.a**.

Example: If complete solubility is not achieved at 20,000 µg/mL in Routine Culture Medium at Tier 1 using the mixing procedures specified in **Section VII.D.2.a,** then the procedure continues to Tier 2 by diluting the solution to 5 mL and mixing again

as specified in **Section VII.D.2.a.** If the chemical is not soluble in medium, two samples of ~ 100 mg test chemical are weighed to attempt to solubilize in DMSO and ethanol at 200,000 µg/mL (i.e., 200 mg/mL). Solutions are mixed following the sequence of procedures prescribed in **Section VII.D.2.a** in an attempt to dissolve. If solubility is not achieved at Tier 2, then the solutions (media, DMSO, and ethanol) prepared in Tier 2 are diluted by 10 so as to test 200 µg/mL in media, and 20,000 µg/mL in DMSO and ethanol. This advances the procedure to Tier 3. Solutions are again mixed as prescribed in **Section VII.D.2.a** in an attempt to dissolve. If solubility is not achieved in Tier 3, the procedure continues to Tier 4, and to 5 if necessary (see **Figure 1** and **Table 2**).

NOTE: The amounts of test chemical weighed and Routine Culture Medium added may be modified from the amounts given above, provided that the targeted concentrations specified for each tier are tested.

## *Figure 1. Solubility Flow Chart*

**TIER 1**

| | |
|---|---|
| STEP 1: | 20 mg/mL test chemical (TC) in 0.5 mL medium:<br>• if TC soluble, then **STOP**.<br>• if TC insoluble, then go to STEP 2. |

**TIER 2**

| | |
|---|---|
| STEP 2: | 2 mg/mL TC in medium – increase volume from STEP 1 by 10 (i.e., to 5 mL)<br>• if TC soluble, then **STOP**.<br>• if TC insoluble, then go to STEP 3. |
| STEP 3: | 200 mg/mL TC in DMSO<br>j) if TC soluble, then **STOP**.<br>k) if TC insoluble, test at 200 mg/mL in ETOH.<br>l) if TC soluble, then **STOP.**<br>m) If TC insoluble, go to STEP 4. |

**TIER 3**

| | |
|---|---|
| STEP 4: | 0.2 mg/mL TC in medium – increase volume from STEP 2 by 10 (i.e., to 50 mL)<br>• if TC soluble, then **STOP**.<br>• if TC insoluble, test at 20 mg/mL in DMSO – increase volume from STEP 3 by 10 (i.e., to 5 mL).<br>  • if TC soluble, then **STOP.**<br>  • if TC insoluble, test at 20 mg/mL in ETOH – increase volume from STEP 3 by 10 (i.e., to 5 mL).<br>  • if TC soluble, then **STOP.**<br>  • if TC insoluble, then go to STEP 5. |

**TIER 4**

| | |
|---|---|
| STEP 5: | 2 mg/mL TC in DMSO – increase volume from STEP 4 by 10 (i.e., to 50 mL)<br>• if TC soluble, then **STOP.**<br>• if TC insoluble, test at 2 mg/mL in ETOH – increase volume from STEP 4 by 10 (i.e., to 50 mL).<br>  • if TC soluble, then **STOP.**<br>  • if TC insoluble, then go to STEP 6. |

**TIER 5**

| | |
|---|---|
| STEP 6: | 0.2 mg/mL TC in 50 mL DMSO<br>• if TC soluble, then **STOP.**<br>• if TC insoluble, test at 0.2 mg/mL in 50 mL ETOH<br>  • **STOP** |

**2. Mechanical Procedures**

a) The following hierarchy of mixing procedures will be followed to dissolve the test chemical:

1) Add test chemical to solvent as in Tier 1 of Table 2.
2) Gently mix. Vortex the tube (1 –2 minutes).
3) If test chemical hasn't dissolved, use sonication for up to 5 minutes.
4) If sonication doesn't work, then warm solution to 37°C. This can be performed by warming 5 mL tubes in a 37°C water bath for at least 5-10 minutes before evaluating solubility. Warm larger vessels for at least 15-20 minutes in a 37°C water bath before evaluating solubility.
5) Proceed to Tier 2 (and Tiers 3-5, if necessary of Table 2 and repeat procedures 2-4).

b) The preference of solvent for dissolving test chemicals is medium, DMSO, and then ethanol. Thus, if a test chemical dissolves in more than one solvent at any one solubility-testing tier, then the choice of solvent follows this hierarchy. For example, if, at any tier, a chemical is soluble in medium and DMSO, but not ethanol, the choice of solvent would be medium. If the chemical were insoluble in medium, but soluble in DMSO and ethanol, the choice of solvent would be DMSO.

**After the lab has determined the preferred solvent for the test chemical and before proceeding to the cytotoxicity testing, the Study Director will discuss the solvent selection with the Study Management Team (SMT) of the validation study.** The SMT will relate what solvent should be used in the assay for each chemical.

**E. Preparation of Test Chemicals**

[Note: Preparation under red or yellow light is recommended to preserve chemicals that degrade upon exposure to light.]

**1. Test Chemical in Solution**

a) Allow test chemicals to equilibrate to room temperature before dissolving and diluting.

b) Prepare test chemical immediately prior to use. The solutions must not be cloudy nor have noticeable precipitate. Each stock dilution should have at least 1-2 mL total volume to ensure adequate solution for the test wells in a single 96-well plate.

c) For chemicals dissolved in DMSO or ethanol, the final DMSO or ethanol concentration for application to the cells must be 0.5 % (v/v) in the vehicle controls and in all of the eight test concentrations.

d) The stock solution for each test chemical should be prepared at the highest concentration found to be soluble in the solubility test. Thus, the highest test concentration applied to the cells in each range finding experiment is:
- 0.5 times the highest concentration found to be soluble in the solubility test, if the chemical was soluble in medium, or

- 1/200 the highest concentration found to be soluble in the solubility test if the chemical was soluble in ethanol or DMSO.

e) The seven lower concentrations in the range finding experiment would then be prepared by successive dilutions that decrease by one log unit each. The following example illustrates the preparation of test chemical in solvent and the dilution of dissolved test chemical in medium before application to NHK cells.

Example: Preparation of Test Chemical in Solvent Using a Log Dilution Scheme

If DMSO was determined to be the preferred solvent at Tier 2 of the solubility test (i.e., 200,000 µg/mL), dissolve the chemical in DMSO at 200,000 µg/mL for the chemical stock solution.

1) Label eight tubes 1 – 8. Add 0.9 mL solvent (e.g., DMSO) to tubes 2 -- 8.
2) Prepare stock solution of 200,000 µg test chemical/mL solvent in tube # 1.
3) Add 0.1 mL of 200,000 µg/mL dilution from tube #1 to tube #2 to make a 1:10 dilution in solvent (i.e., 20,000 µg/mL).
4) Add 0.1 mL of 20,000 µg/mL dilution from tube #2 to tube #3 to make another 1:10 dilution (i.e., 1:100 dilution from stock solution) in solvent (i.e., 2,000 µg/mL)
5) Continuing making serial 1:10 dilutions in the prepared solvent tubes.
6) Since each concentration is 200 fold greater than the concentration to be tested, make a 1:100 dilution by diluting 1 part dissolved chemical in each tube with 99 parts of culture medium (e.g., 0.1 mL of test chemical in DMSO + 9.9 mL culture medium) to derive the eight 2X concentrations for application to NHK cells. Each 2X test chemical concentration will then contain 1 % v/v solvent. The NHK cells will have 0.125 mL of culture medium in the wells prior to application of the test chemical. By adding 0.125 mL of the appropriate 2X test chemical concentration to the appropriate wells, the test chemical will be diluted appropriately (e.g., highest concentration in well will be 1,000 µg/mL) in a total of 0.250 mL and the solvent concentration in the wells will be 0.5% v/v.
7) A test article prepared in DMSO or ethanol may precipitate upon transfer into the Routine Culture Medium. The 2X dosing solutions should be evaluated for precipitates and the results will be recorded in the workbook. It will be permissible to test all of the dosing solutions in the dose range finding assay only. Doses containing test article precipitates should be avoided, and will not be used in the ICx determinations for either the range finding experiments or the definitive tests.

Document all test chemical preparations in the Study Workbook.

**2. pH of Test Chemical Solutions**

Measure the pH of the highest concentration of the test chemical in culture medium using pH paper. Document the pH and note the color of the medium for all dilutions. Do not adjust the pH.

**3. Concentrations of Test Chemical**

a) Range Finder Experiment

Test eight concentrations of the test chemical by diluting the stock solution with a constant factor covering a large range. The initial dilution series shall be log dilutions (e.g., 1:10, 1:100, 1:1000, etc.).

The data from any well that has precipitate will be excluded from any calculations.

b) Main Experiment

[Note: After the range finding assay is completed, the concentration-response experiment shall be performed three times on three different days for each chemical (i.e., one plate per day per chemical).]

Depending on the slope of the concentration-response curve estimated from the range finder, the dilution/progression factor in the concentration series of the main experiment should be smaller ($\sqrt[6]{10} = 1.47$). Cover the relevant concentration range (≥10 % and ≤ 90 % effect) preferably with three points of a graded effect, but with a minimum of two points, one on each side of the $IC_{50}$ value, avoiding too many non-cytotoxic and/or 100 %-cytotoxic concentrations. Experiments revealing less than one cytotoxic concentration on each side of the $IC_{50}$ value shall be repeated, where possible, with a smaller dilution factor. In addition, the dilution scheme shall be adjusted in subsequent replicate assays (i.e., definitive assays), if necessary, to increase the number of points on both sides of the $IC_{50}$ in the 10-90% response range. (Taking into account pipetting errors, a progression factor of 1.21 is regarded the smallest factor achievable.)

Determine which test chemical concentration is closest to the $IC_{50}$ value (e.g., 50 % cytotoxicity). Use that value as a central concentration and adjust dilutions higher and lower in equal steps for the definitive assay.

Maximum Doses to be Tested in the Main Experiments

If minimal or no cytotoxicity was measured in the dose range finding assay, a maximum dose for the main experiments will be established as follows:

- For test chemicals prepared in Routine Culture Medium, the highest test article concentration that may be applied to the cells in the main experiments will be either 100 mg/mL, or the maximum soluble dose. Test chemical will be weighed into a glass tube and the weight will be documented. A volume of Routine Culture Medium will be added to the vessel so that the concentration is 200,000 µg/mL (200 mg/mL). The solution is mixed as specified in **Section VII.D.2.a**. If complete solubility is achieved in medium, then 7 additional serial stock dosing solutions may be prepared from the 200 mg/mL 2X stock. If the test chemical is insoluble in medium at 200 mg/ml, proceed by adding medium, in small incremental amounts, to attempt to dissolve the chemical by using the sequence of mixing procedures specified in **Section VII.D.2.a**. The highest soluble stock solution will be used to prepare the 7 additional serial stock dosing solutions.

- For test chemicals prepared in either DMSO or ethanol, the highest test article concentration that may be applied to the cells in the main experiments will be either 2.5 mg/mL, or less, depending upon the maximum solubility in solvent. Test chemical will be weighed into a glass tube and the weight will be documented. A volume of the appropriate solvent (determined from the original solubility test) will be added to the vessel so that the concentration is 500,000 µg/mL (500 mg/mL). The solution is mixed as specified in **Section VII.D.2.a**. If complete solubility is achieved in the solvent, then 7 additional serial stock dosing solutions may be prepared from the 500 mg/mL 200X stock. If the test chemical is insoluble in solvent at 500 mg/ml, proceed by adding solvent, in small incremental amounts, to attempt to dissolve the chemical by using the sequence of mixing procedures specified in **Section VII.D.2.a**. The highest soluble stock solution will be used to prepare the 7 additional serial stock dosing solutions.

c) Test Chemical Dilutions

The dosing factor of 3.16 (= $\sqrt[2]{10}$) divides a log into two equidistant steps, a factor of 2.15 (= $\sqrt[3]{10}$) divides a decade into three steps. The factor of 1.47 (= $\sqrt[6]{10}$) divides a log into six equidistant steps, and the factor of 1.21 (= $\sqrt[12]{10}$) divides the log into 12 steps.

EXAMPLE:

| | | | | | | | | | | | | |
|---|---|---|---|---|---|---|---|---|---|---|---|---|
| 10 | | | | | | 31.6 | | | | | | 100 |
| 10 | | | | 21.5 | | | | 46.4 | | | | 100 |
| 10 | | 14.7 | | 21.5 | | 31.6 | | 46.4 | | 68.1 | | 100 |
| 10 | 12.1 | 14.7 | 17.8 | 21.5 | 26.1 | 31.6 | 38.3 | 46.4 | 56.2 | 68.1 | 82.5 | 100 |

The technical production of decimal geometric concentration series is simple. An example is given for factor 1.47:

*Dilute 1 volume of the highest concentration by adding 0.47 volumes of diluent. After equilibration, dilute 1 volume of this solution by adding 0.47 volumes of diluent...(etc.).*

## F. Test Procedure

### 1. 96-Well Plate Configuration

The NHK NRU assay for test chemicals will use the 96-well plate configuration shown in Figure 2.

***Figure 2. 96-Well Plate Configuration for Positive Control and Test Chemical Assays***

| | 1 | 2 | 3 | 4 | 5 | 6 | 7 | 8 | 9 | 10 | 11 | 12 |
|---|---|---|---|---|---|---|---|---|---|---|---|---|
| A | b | b | b | b | b | b | b | b | b | b | b | b |
| B | b | VC | $C_1$ | $C_2$ | $C_3$ | $C_4$ | $C_5$ | $C_6$ | $C_7$ | $C_8$ | VC | b |
| C | b | VC | $C_1$ | $C_2$ | $C_3$ | $C_4$ | $C_5$ | $C_6$ | $C_7$ | $C_8$ | VC | b |
| D | b | VC | $C_1$ | $C_2$ | $C_3$ | $C_4$ | $C_5$ | $C_6$ | $C_7$ | $C_8$ | VC | b |
| E | b | VC | $C_1$ | $C_2$ | $C_3$ | $C_4$ | $C_5$ | $C_6$ | $C_7$ | $C_8$ | VC | b |
| F | b | VC | $C_1$ | $C_2$ | $C_3$ | $C_4$ | $C_5$ | $C_6$ | $C_7$ | $C_8$ | VC | b |
| G | b | VC | $C_1$ | $C_2$ | $C_3$ | $C_4$ | $C_5$ | $C_6$ | $C_7$ | $C_8$ | VC | b |
| H | b | b | b | b | b | b | b | b | b | b | b | b |

VC = untreated VEHICLE CONTROL (mean viability set to 100 %)
$C_1 – C_8$ = Test Chemicals or Positive Control (SLS) at eight concentrations (C1 = highest, C8 = lowest)
b = BLANKS (contain **no** cells)

**2. Application of Test Chemical**

a) Two optional methods for rapidly applying the 2X dosing solutions onto the 96-well plates may be utilized. The first method is to add each of the 2X dosing solutions into labeled, sterile reservoirs (e.g., Corning/Costar model 4870 sterile polystyrene 50 mL reagent reservoirs and/or Corning/Transtar model 4878 disposable reservoir liners, 8-channel). The second method utilizes a "dummy" plate (i.e., an empty sterile 96-well plate) prepared to hold the dosing solutions immediately prior to treatment of the test plate (with cells). The test chemical and control dosing solutions should be dispensed into the dummy plate in the same pattern/order as will be applied to the plate containing cells. More volume than needed for the test plate (i.e. greater than 125 µl/well) should be in the wells of the dummy plate. At the time of treatment initiation, a multi-channel micropipettor is used to transfer the 2X dosing solutions, from the reservoirs or dummy plate, to the appropriate wells on the treatment plate (as described in step c. below). These methods will ensure that the dosing solutions can be transferred rapidly to the appropriate wells of the test plate to initiate treatment times and to minimize the range of treatment initiation times across a large number of treatment plates, and to prevent "out of order" dosing.

b) After 48 - 72 h (i.e., after cells attain 20-30+ % confluency [see Section VII.C.4(h)[) incubation of the cells, add 125 µl of the appropriate concentration of test chemical, the PC, or the VC (see Figure 2 for the plate configuration) directly to the test wells. Do not remove Routine Culture Medium for re-feeding the cells.Incubate cells for 48 h ± 0.5 h (37ºC ± 1ºC, 90 % ± 5 % humidity, and 5.0 % ± 1 % $CO_2$/air).

c) **Positive Control**: For each set of test chemical plates used in an assay, a separate plate of positive control concentrations will be set up following the concentration range established in the development of the positive control database in Phase Ia of the Validation Study. The mean $IC_{50}$ and two standard deviations (SD) of the $IC_{50}$ of SLS are the values that will be used as an acceptance criterion for test sensitivity for the NHK NRU assay. This plate will follow the same schedule and procedures as used for the test chemical plates.

**3. Microscopic Evaluation**

After at least 46 h treatment, examine each plate under a phase contrast microscope to identify systematic cell seeding errors and growth characteristics of control and treated cells. Record any changes in morphology of the cells due to the cytotoxic effects of the test chemical, but do not use these records for any quantitative measure of cytotoxicity. Undesirable growth characteristics of control cells may indicate experimental error and may be cause for rejection of the assay. Use the following Visual Observations Codes in the description of cell culture conditions.

**Visual Observations Codes**

| Note Code | Note Text |
|---|---|
| | |
| 1 | Normal Cell Morphology |
| 2 | Low Level of Cell Toxicity |
| 3 | Moderate Level of Cell Toxicity |
| 4 | High level of Cell Toxicity |
| 1P | Normal Cell Morphology with Precipitate |
| 2P | Low Level of Cell Toxicity with Precipitate |
| 3P | Moderate Level of Cell Toxicity with Precipitate |
| 4P | High level of Cell Toxicity with Precipitate |
| 5P | Unable to View Cells Due to Precipitate |

**4. Measurement of NRU**

b) Carefully remove (i.e., "dump") the Routine Culture Medium (with test chemical) and rinse the cells very carefully with 250 µL pre-warmed D-PBS. Remove the rinsing solution by dumping and remove excess by gently blotting on sterile paper towels. Add 250 µL NR medium (to all wells including the blanks) and incubate (37ºC ± 1ºC, 90 % ± 5 % humidity, and 5.0 % ± 1 % $CO_2$/air) for 3±0.1 h. Observe the cells briefly during the NR incubation (e.g., at 1, 2, and 3 h – Study Director 's discretion) for NR crystal formation. Record observations in the Study Workbook. Study Director can decide to reject the experiment if excessive NR crystallization has occurred.
c) After incubation, remove the NR medium, and carefully rinse cells with 250 µL pre-warmed D-PBS.
d) Decant and blot D-PBS from the plate. (Optionally: centrifuge the reversed plate.)
e) Add exactly 100 µL NR Desorb (ETOH/acetic acid) solution to all wells, including blanks.
f) Shake microtiter plate rapidly on a microtiter plate shaker for 20 – 45 min to extract NR from the cells and form a homogeneous solution.

g) Measure the absorption (within 60 minutes of adding NR Desorb solution) of the resulting colored solution at 540 nm ± 10 nm in a microtiter plate reader (spectrophotometer), using the blanks as a reference. [Phase Ia data show the mean OD value for the plate blanks to be 0.058 ± 0.032 for NHK cells (mutually agreed upon by Testing Facility and SMT; data from 3 labs; N = 75). Use this value as a **guide** for assessment of the blank values.] Save raw data in the Excel format as provided by the Study Management Team.

**5. Quality Check of Assay**

a) Test Acceptance Criteria

1) A test meets acceptance criteria, if the $IC_{50}$ for SLS is within two standard deviations of the historical mean established by the Test Facility (as per **VII.F.2.c**).
2) A test meets acceptance criteria if the corrected mean $OD_{540}$ of VCs is ≥ 0.60 and ≤ 1.70
3) A test meets acceptance criteria if the left and the right mean of the VCs do not differ by more than 15 % from the mean of all VCs.
4) A test meets acceptance criteria if a minimum of two points, one on each side of the $IC_{50}$ value, are determined and fall within the range ≥10 % and ≤ 90 % effect.

[Note: All acceptance criteria must be met for an assay to be considered acceptable.]

b) Checks for Systematic Cell Seeding Errors

To check for systematic cell seeding errors, untreated VCs are placed both at the left side (row 2) and the right side (row 11 for the test plates) of the 96-well plate. Aberrations in the cell monolayer for the VCs may reflect a volatile and toxic test article present in the assay.

Checks for cell seeding errors may also be performed by examining each plate under a phase contrast microscope to assure that cell quantity is consistent.

c) Quality Check of Concentration-Response

The $IC_{50}$ derived from the concentration-response of the test chemicals should be backed by preferably three responses ≥ 10 and ≤ 90 % inhibition of NRU and at least two responses, one on either side of the $IC_{50}$ value (see **VII.E.3.b**). If this is not the case, and the concentration progression factor can be easily reduced, reject the experiment and repeat it with a smaller progression factor. In addition, the dilution scheme shall be adjusted in subsequent replicate assays, if necessary, to increase the number of points on both sides of the $IC_{50}$ in the 10-90% response range. Numerical scoring of the cells (see **VII.F.3**) should be determined and documented in the Study Workbook.

## G. Data Analysis

A calculation of cell viability expressed as NRU is made for each concentration of the test chemical by using the mean NRU of the six replicate values (minimum of four acceptable replicates wells) per test concentration. This value is compared with the mean NRU of all VC values (provided VC values have met the VC acceptance criteria). Relative cell viability is then expressed as percent of untreated VC. If achievable, the eight concentrations of each chemical tested will span the range of no effect up to total inhibition of cell viability. Data from the microtiter plate reader shall be transferred to the Excel® spreadsheet provided by the Study Management Team for determining cell viability and performing statistical analyses.

The concentration of a test chemical reflecting a 20 %, 50 %, and 80 % inhibition of cell viability (i.e., the $IC_{20}$, $IC_{50}$, and $IC_{80}$) is determined from the concentration-response by applying a Hill function to the concentration-response data. Statistical software (e.g., GraphPad PRISM® 3.0) specified by the Study Management Team shall be used to calculate $IC_{20}$, $IC_{50}$, and $IC_{80}$ values (and the associated confidence limits) for each test chemical. In addition, the Study Management Team shall provide guidelines for calculating ICx values and confidence limits. The Testing Facility shall report data using at least three (3) significant figures and shall forward the results from each assay to the Study Management Team/biostatistician through the designated contacts in electronic format and hard copy upon completion of testing. The Study Management Team will be directly responsible for the statistical analyses of the Validation Study data.

## VIII. REFERENCES

Clonetics Normal Human Keratinocyte Systems Instructions for Use, AA-1000-4-Rev.03/00. (http://www.clonetics.com).

Hackenberg, U. and H. Bartling. 1959. Messen und Rechnen im pharmakologischen Laboratorium mit einem speziellen Zahlensystem (WL24-System). Arch. Exp. Pathol. Pharmakol. 235: 437-463.

Triglia, D., P.T. Wegener, J. Harbell, K. Wallace, D. Matheson, and C. Shopsis. 1989. Interlaboratory validation study of the keratinocyte neutral red bioassay from Clonetics Corporation. In *Alternative Methods in Toxicology*, Volume 7. A.M. Goldberg, ed., pp. 357-365. Mary Ann Liebert, Inc., New York.

## IX. APPROVAL

_____ _____

**SPONSOR REPRESENTATIVE** **DATE**

**(Print or type name)**

_____ _____

**Testing Facility STUDY DIRECTOR** **DATE**
**(Print or type name)**

# Appendix C5

## Test Method Protocol for the BALB/c 3T3 Neutral Red Uptake Cytotoxicity Test (Phase II)

***[This Page Intentionally Left Blank]***

# TEST METHOD PROTOCOL
# for the BALB/c 3T3 Neutral Red Uptake Cytotoxicity Test

**A Test for Basal Cytotoxicity for an *In Vitro* Validation Study**
**Phase II**

**May 15, 2003**

**Prepared by**

**The National Toxicology Program (NTP) Interagency Center for the Evaluation of Alternative Toxicological Methods (NICEATM)**

**Based on Standard Operating Procedure Recommendations from an International Workshop Organized by the Interagency Coordinating Committee on the Validation of Alternative Methods (ICCVAM)**

**National Institute of Environmental Health Sciences (NIEHS)**
**National Institutes of Health (NIH)**
**U.S. Public Health Service**
**Department of Health and Human Services**

# TEST METHOD PROTOCOL

## The BALB/c 3T3 Neutral Red Uptake Cytotoxicity Test
## A Test for Basal Cytotoxicity
## Phase II

### I. PURPOSE

The purpose of this study is to evaluate the cytotoxicity of test chemicals using the BALB/c 3T3 Neutral Red Uptake (NRU) cytotoxicity test. The data will be used to evaluate the intra- and inter-laboratory reproducibility of the assay and effectiveness of the cytotoxicity assay to predict the starting doses for rodent acute oral systemic toxicity assays. This test method protocol outlines the procedures for performing the cytotoxicity test and supports the *in vitro* validation study organized by NICEATM and the European Centre for the Validation of Alternative Methods (ECVAM) and sponsored by NIEHS, U.S. Environmental Protection Agency, and ECVAM. This test method protocol applies to all personnel involved with performing the cytotoxicity assay.

#### A. BALB/c 3T3 Neutral Red Uptake Cytotoxicity Test

The 3T3 NRU test will be performed to analyze the *in vitro* toxicity of nine (9) blinded/coded test chemicals. This test will be used to determine $IC_{20}$, $IC_{50}$, and $IC_{80}$ values for the predetermined set of test chemicals of varying toxicities.

### II. SPONSOR

**A.** Name: National Institute of Environmental Health Sciences (NIEHS); The National Toxicology Program (NTP) Interagency Center for the Evaluation of Alternative Toxicological Methods (NICEATM)

**B.** Address: P.O. Box 12233
Research Triangle Park, NC 27709

**C.** Representative: *Named Representative*

### III. IDENTIFICATION OF TEST AND CONTROL SUBSTANCES

**A.** Test Chemicals: *Blinded Chemicals (9)*

**B.** Controls:

| | |
|---|---|
| Positive: | Sodium Lauryl Sulfate |
| Vehicle (Negative): | Assay medium (DMEM containing 5% NBCS, 4 mM L-Glutamine, 100 IU/mL Penicillin, 100 µg/mL Streptomycin) |
| Solvent (as needed): | Assay medium with appropriate solvent used to prepare the test chemicals (**Section VII.E**) |

## IV. TESTING FACILITY AND KEY PERSONNEL

### A. Facility Information

1) Name:
2) Address:
3) Study Director:
4) Laboratory Technician(s):
5) Scientific Advisor:
6) Quality Assurance Director:
7) Safety Manager:
8) Facility Management:

### B. Test Schedule

1) Proposed Experimental Initiation Date:
2) Proposed Experimental Completion Date:
3) Proposed Report Date:

## V. TEST SYSTEM

The NRU cytotoxicity assay procedure is a cell survival/viability chemosensitivity assay based on the ability of viable cells to incorporate and bind neutral red (NR), a supravital dye. NR is a weak cationic dye that readily penetrates cell membranes by non-ionic diffusion and accumulates intracellularly in lysosomes. Alterations of the cell surface or the sensitive lysosomal membrane lead to lysosomal fragility and other changes that gradually become irreversible. Such changes brought about by the action of xenobiotics result in a decreased uptake and binding of NR. It is thus possible to distinguish between viable, damaged, or dead cells, which is the basis of this assay.

Healthy mammalian cells, when maintained in culture, continuously divide and multiply over time. A toxic chemical, regardless of site or mechanism of action, will interfere with this process and result in a reduction of the growth rate as reflected by cell number. Cytotoxicity is expressed as a concentration dependent reduction of the uptake of the NR after chemical exposure thus providing a sensitive, integrated signal of both cell integrity and growth inhibition.

## VI. DEFINITIONS

**A.** *Hill function*: a four parameter logistic mathematical model relating the concentration of test chemical to the response being measured in a sigmoidal shape.

$$Y = \text{Bottom} + \frac{\text{Top} - \text{Bottom}}{1 + 10^{(\text{logIC50} - X)\text{HillSlope}}}$$

where Y= response, X is the logarithm of dose (or concentration), Bottom is the minimum response, Top is the maximum response, logIC50 is logarithm of X at the response midway between Top and Bottom, and HillSlope describes the steepness of the curve.

**B**. *Documentation*: all methods and procedures will be noted in a Study Workbook; logs will be maintained for general laboratory procedures and equipment (e.g., media preparation, test

chemical preparation, incubator function); all optical density data obtained from the spectrophotometer plate reader will be saved in electronic and paper formats; all calculations of ICx values and other derived data will be in electronic and paper format; all data will be archived.

## VII. PROCEDURES

### A. Materials

#### 1. Cell Lines

BALB/c 3T3 cells, clone 31
CCL-163, LGC Reference Materials, Customer Service, Queens Road, Teddington, Middlesex, TW110LY, UK
CCL-163, American Type Culture Collection [ATCC], Manassas, VA, USA)

#### 2. Technical Equipment

[Note: Suggested brand names/vendors are listed in parentheses. Equivalents may be used.]

a) Incubator: 37ºC ± 1ºC, 90 % ± 5 % humidity, 5.0 % ± 1 % $CO_2$/air
b) Laminar flow clean bench/cabinet (standard: "biological hazard")
c) Water bath: 37ºC ± 1ºC
d) Inverse phase contrast microscope
e) Sterile glass tubes with caps (e.g., 5 mL)
f) Centrifuge (optionally: equipped with microtiter plate rotor)
g) Laboratory balance
h) 96-well plate spectrophotometer (i.e., plate reader) equipped with 540 nm ± 10 nm filter
i) Shaker for microtiter plates
j) Cell counter or hemocytometer
k) Pipetting aid
l) Pipettes, pipettors (multi-channel and single channel; multichannel repeater pipette), dilution block
m) Cryotubes
n) Tissue culture flasks (e.g., 75 - 80 $cm^2$, 25 $cm^2$)
o) 96-well flat bottom tissue culture microtiter plates (e.g., Nunc # 167 008; Falcon tissue culture-treated)
p) pH paper (wide and narrow range)
q) Multichannel reagent reservoir
r) Waterbath sonicator
s) Magnetic stirrer
t) Antistatic bar ionizer/antistatic gun (optional for neutralizing static on 96-well plates)
u) Dry heat block (optional)

[Note: Tissue culture flasks and microtiter plates should be prescreened to ensure that they adequately support the growth of 3T3 cells. Multi-channel repeater pipettes may be used for plating cells in the 96-well plates, dispensing plate rinse solutions, NR medium, and desorb solution. Do not use the repeater pipette for dispensing test chemicals to the cells.]

### 3. Chemicals, Media, and Sera

a) Dulbecco's Modification of Eagle's Medium (DMEM) without L-Glutamine; should have high glucose [4.5gm/l] (e.g., ICN-Flow Cat. No. 12-332-54)
b) L-Glutamine 200 mM (e.g., ICN-Flow # 16-801-49)
c) New Born Calf Serum (NBCS or NCS) (e.g., Biochrom # SO 125)
d) 0.05 % Trypsin/0.02 % EDTA solution (e.g., SIGMA T 3924, ICN-Flow, # 16891-49)
e) Phosphate buffered saline (PBS) without $Ca^{2+}$ and $Mg^{2+}$(for trypsinization)
f) Hanks' Balanced Salt Solution (HBSS) without $Ca^{2+}$ and $Mg^{2+}$(CMF-HBSS)
g) Dulbecco's Phosphate Buffered Saline (D-PBS) [formulation containing calcium and magnesium cations; glucose optional] (for rinsing)
h) Penicillin/streptomycin solution (e.g. ICN-Flow # 16-700-49)
i) Neutral Red (NR) Dye – tissue culture-grade; liquid form (e.g., SIGMA N 2889); powder form (e.g., SIGMA N 4638)
j) Dimethyl sulfoxide (DMSO), U.S.P. analytical grade (Store under nitrogen @ -20ºC)
k) Ethanol (ETOH), U.S.P. analytical grade (100 %, non-denatured for test chemical preparation; 95 % can be used for the desorb solution)
l) Glacial acetic acid, analytical grade
m) Distilled $H_2O$ or any purified water suitable for cell culture (sterile)
n) Sterile paper towels (for blotting 96-well plates)

[Note: Due to lot variability of NBCS/NCS, first check a lot for growth stimulating properties with 3T3 cells (approximately 20-24 h doubling time) and then reserve a sufficient amount of NBCS/NCS. May use pre-tested serum lot from Phases Ia and Ib of the validation study if the serum has been stored under appropriate conditions and shelf-life has not expired.]

## B. Preparations of Media and Solutions

[Note: All solutions (except NR stock solution, NR medium and NR desorb), glassware, pipettes, etc., shall be sterile and all procedures should be carried out under aseptic conditions and in the sterile environment of a laminar flow cabinet (biological hazard standard). All methods and procedures will be adequately documented.]

### 1. Media

DMEM (buffered with sodium bicarbonate) supplemented with (final concentrations in DMEM are quoted):

a) for freezing (Freeze Medium); contains 2X concentration of NBCS/NCS and DMSO of final freezing solution
   40 % NBCS/NCS
   20 % DMSO

b) for routine culture (Routine Culture Medium)
   10 % NBCS/NCS
   4 mM Glutamine

c) for solubility testing and test chemical dilution (Chemical Dilution Medium)

| | |
|---|---|
| 4 mM | Glutamine |
| 200 IU/mL | Penicillin |
| 200 µg/mL | Streptomycin |

d) for dilution of NR stock solution (NR Dilution Medium)

| | |
|---|---|
| 5 % | NBCS/NCS |
| 4 mM | Glutamine |
| 100 IU/mL | Penicillin |
| 100 µg/mL | Streptomycin |

[Note: The Chemical Dilution Medium with test chemical will dilute the serum concentration of the Routine Culture Medium in the test plate to 5 %. Serum proteins may mask the toxicity of the test substance, but serum cannot be totally excluded because cell growth is markedly reduced in its absence.]

Completed media formulations should be kept at approximately 2-8° C and stored for no longer than two weeks.

**2. Neutral Red (NR) Stock Solution**

The liquid tissue culture-grade stock NR Solution will be the first choice for performing the assay (e.g., SIGMA #N2889, 3.3 mg/mL). Store liquid tissue culture-grade NR Stock Solution at the storage conditions and shelf-life period recommended by the manufacturer.

If the liquid form is not available, the following formulation can be prepared.

EXAMPLE: 0.25 g NR Dye powder in 100 mL $H_2O$

The NR Stock Solution (powder in water) should be stored in the dark at room temperature for up to two months.

**3. Neutral Red (NR) Medium**

<u>EXAMPLE</u>:

| | |
|---|---|
| 0.758 mL (3.3 mg NR dye/mL solution) | NR Stock Solution |
| 99.242 mL | NR Dilution Medium (pre-warmed to 37° C) |

The final concentration of the NR Medium is **<u>25 µg NR dye/mL</u>** and aliquots will be prepared on the day of application.

[Note: The NR Medium shall be filtered (e.g., Millipore filtering, 0.2 – 0.45 µm pore size) to reduce NR crystals. Aliquots of the NR Medium should be maintained at 37° C (e.g., in a waterbath) before adding to the cells and used within 30 min of preparation but also used within 15 min after removing from 37° C storage.]

**4. Ethanol/Acetic Acid Solution (NR Desorb)**

| | |
|---|---|
| 1 % | Glacial acetic acid solution |
| 50 % | Ethanol |
| 49 % | $H_2O$ |

## C. Methods

**1. Cell Maintenance and Culture Procedures**

BALB/c 3T3 cells are routinely grown as a monolayer in tissue culture grade flasks (e.g., 75 - 80 $cm^2$) at 37ºC ± 1ºC, 90 % ± 5 % humidity, and 5.0 % ± 1 % $CO_2$/air. The cells should be examined on a daily (i.e., on workdays) basis under a phase contrast microscope, and any changes in morphology or their adhesive properties noted in a Study Workbook.

**2. Receipt of Cryopreserved BALB/c 3T3 Cells**

Upon receipt of cryopreserved BALB/c 3T3 cells, the vial(s) of cells shall be stored in a liquid nitrogen freezer until needed.

**3. Thawing Cells**

Thaw cells by putting ampules into a water bath at 37°C ± 1ºC. Leave for as brief a time as possible.

a) Resuspend the cells in pre-warmed Routine Culture Medium and transfer into pre-warmed Routine Culture Medium in a tissue-culture flask.

b) Incubate at 37ºC ± 1ºC, 90 % ± 5 % humidity, and 5.0 % ± 1 % $CO_2$/air.

c) When the cells have attached to the bottom of the flask (within 4 to 24 h), decant the supernatant and replace with fresh pre-warmed (37ºC) medium. Culture as described above.

d) Passage at least two times before using the cells in a cytotoxicity test.

A fresh batch of frozen cells from the stock lot of cells should be thawed out and cultured approximately every two months. This period resembles a sequence of about 18 passages.

**4. Routine Culture of BALB/C 3T3 Cells**

When cells exceed 50 % confluence (but less than 80 % confluent) they should be removed from the flask by trypsinization:

a) Decant medium, briefly rinse cultures with 5 mL PBS or Hanks' BSS (<u>without $Ca^{2+}$, $Mg^{2+}$</u>) per 25 $cm^2$ flask (15 mL per 75 $cm^2$ flask). Wash cells by gentle agitation to remove any remaining serum that might inhibit the action of the trypsin.

b) Discard the washing solution. Repeat the rinsing procedure and discard the washing solution.

c) Add 1-2 mL trypsin-EDTA solution per 25 $cm^2$ to the monolayer for a few seconds (e.g., 15-30 seconds).

d) Remove excess trypsin-EDTA solution and incubate the cells at room temperature.

e) After 2-3 minutes (min), lightly tap the flask to detach the cells into a single cell suspension.

**5. Cell Counting**

After detaching the cells, add 0.1-0.2 mL of pre-warmed (37ºC) Routine Culture Medium/$cm^2$ to the flask (e.g., 2.5 mL for a 25 $cm^2$ flask). Disperse the monolayer by gentle trituration. It is important to obtain a single cell suspension for exact counting. Count a sample of the cell suspension obtained using a hemocytometer or cell counter (e.g., Coulter counter).

**6. Subculture of Cells**

After determination of cell number, the culture can be sub-cultured into other flasks or seeded into 96-well microtiter plates. BALB/c 3T3 cells are routinely passaged at suggested cell densities as listed in the table (approximate doubling time is 20-24 h). The individual laboratories will need to determine and adjust the final density to achieve appropriate growth.

**Table 1. Cell Densities for Subculturing**

| Days in Culture | Seeding Density (cells/$cm^2$) | Total Cells per 25 $cm^2$ flask | Total Cells per 75 $cm^2$ flask |
|---|---|---|---|
| 2 | 16800 | $4.2 \times 10^5$ | $1.26 \times 10^6$ |
| 3 | 8400 | $2.1 \times 10^5$ | $6.3 \times 10^5$ |
| 4 | 4200 | $1.05 \times 10^5$ | $3.15 \times 10^5$ |

[Note: It is important that cells have overcome the lag growth phase when they are used for the test.]

**7. Freezing Cells** (procedure required only if current stock of cells is depleted)

Stocks of BALB/c 3T3 cells can be stored in sterile, freezing tubes in a liquid nitrogen freezer. DMSO is used as a cryoprotective agent.

a) Centrifuge trypsinized cells at approximately 200 x g.

b) Suspend the cells in cold Routine Culture Medium (half the final freezing volume) so a final concentration of $1\text{-}5 \times 10^6$ cells/mL can be attained.

c) Slowly add cold Freeze Medium to the cells so that the solvent will equilibrate across the cell membranes. Bring the cell suspension to the final freezing

volume. The final cell suspension will be 10 % DMSO. Aliquot the cell suspension into freezing tubes and fill to 1.8 mL.

d) Place the tubes into an insulated container (e.g., styrofoam trays) and place in a freezer (-70 to -80°C) for 24 h. This gives a freezing rate of approximately 1°C/min. The laboratory needs to ensure that the freezing protocol is applicable to the 3T3 cells and that the cells are viable when removed from cryopreservation.

e) Place the frozen tubes into liquid nitrogen for storage.

**8. Preparation of Cells for Assays**

a) Cultured cells that are going to be used in seeding the 96-well plates should be fed fresh medium the day before subculturing to the plates. On the day of plate seeding, prepare a cell suspension of 2.0 – 3.0x$10^4$ cells/mL in Routine Culture Medium. Using a multi-channel pipette, dispense 100 µl Routine Culture Medium only into the peripheral wells (blanks) of a 96-well tissue culture microtiter plate (See **Section VII.F.1**). In the remaining wells, dispense 100 µl of a cell suspension of 2.0 – 3.0x$10^4$ cells/mL (= 2.0 – 3.0x$10^3$ cells/well). The seeding density should be noted to ensure that the cells in the control wells are not overgrown after three days (i.e., 24 h incubation in step **b** and 48 h exposure to test chemicals). Prepare one plate per chemical to be tested.

b) Incubate cells for 24 ± 2 h (37ºC ± 1ºC, 90 % ± 5 % humidity, 5.0 % ± 1 % $CO_2$/air) so that cells form a less than half (< 50%) confluent monolayer. This incubation period assures cell recovery and adherence and progression to exponential growth phase.

c) Examine each plate under a phase contrast microscope to assure that cell growth is relatively even across the microtiter plate. This check is performed to identify experimental and systemic cell seeding errors. Record observations in the Study Workbook.

**9. Determination of Doubling Time**

a) A cell doubling time procedure was performed on the initial lot of cells that was used in the first cell culture assays of Phase Ia of the Validation Study. The doubling time only needs to be determined in Phase II if there is a change in the lot of cells used. Establish cells in culture and trypsinize cells as per **Section VII.C.4** for subculture. Resuspend cells in NR Dilution Medium (5 % NBCS/NCS). Seed cells at 4200 cells/$cm^2$.

b) Seed five sets of cell culture vessels in triplicate for each cell type (e.g., 15 tissue culture dishes [60mm x 15mm]). Use appropriate volume of culture medium for the culture vessels. Note number of cells placed into each culture dish. Place dishes into the incubators (37ºC ± 1ºC, 90 % ± 5 % humidity, 5.0 % ± 1 % $CO_2$/air).

c) After 4 - 6 hours (use the same initial measurement time for each subsequent doubling time experiment), remove three culture dishes and trypsinize cells. Count

cells using a cell counter or hemocytometer. Cell viability may be determined by dye exclusion (e.g., Trypan Blue; Nigrosin) if Study Director sees a need. Use appropriate size exclusion limits if using a Coulter counter. Determine the total number of cells and document. Repeat sampling at 24 h, 48 h, 72 h, and 96 h post inoculation. Change culture medium at 72 h or sooner in remaining dishes if indicated by pH drop.

d) Plot cell concentration (per mL of medium) on a log scale against time on a linear scale. Determine lag time and population doubling time. Additional dishes and time are needed if the entire growth curve is to be determined (lag phase, log phase, plateau phase).

## D. Solubility Test

The preference of solvent for dissolving test chemicals is medium, DMSO, and then ethanol. Solubility shall be determined in a step-wise procedure that involves attempting to dissolve a test chemical at a relatively high concentration with the sequence of mechanical procedures specified in **Section VII.D.2.a.** If the chemical does not dissolve, the volume of solvent is increased so as to decrease the concentration by a factor of 10, and then the sequence of mechanical procedures in **Section VII.D.2.a** are repeated in an attempt to solubilize the chemical at the lower concentrations. For testing solubility in medium, the starting concentration is 20,000 µg/ml (i.e., 20 mg/mL) in Tier 1, but for DMSO and ethanol the starting concentration is 200,000 µg/ml (i.e., 200 mg/mL) in Tier 2. Weighing out chemical for each solvent (i.e., medium, DMSO, ethanol) can be done all at once, if convenient, but solubility testing (at each tier that calls for more than one solvent) is designed to be sequential - medium, then DMSO, then ethanol – in accordance with the solvent hierarchy (see **Figure 1**). This allows for testing to stop, rather than continue testing with less preferred solvents, if the test chemical dissolves in a more preferred solvent. For example, if a chemical is soluble in medium at a particular tier, testing may stop. Likewise, if a chemical is soluble in DMSO at any tier, testing need not continue with ethanol. However, since the issue of primary importance is testing the solvents and concentrations of test chemical required by any one tier, sequential testing of solvents may be abandoned if the lab can test more efficiently in another way.

### 1. Determination of Solubility

a) Tier 1 begins with testing 20 mg/mL in Chemical Dilution Medium (see **Table 2**). Approximately 10 mg (10,000 µg) of the test chemical will be weighed into a glass tube and the weight will be documented. A volume of Chemical Dilution Medium, approximately 0.5 mL, will be added to the vessel so that the concentration is 20,000 µg/ml (20 mg/mL). The solution is mixed as specified in **Section VII.D.2.a.** If complete solubility is achieved in medium, then additional solubility procedures are not needed.

b) If the test chemical is insoluble in Chemical Dilution Medium, proceed to Tier 2 by adding enough medium, approximately 4.5 mL, to attempt to dissolve the chemical at 2 mg/mL by using the sequence of mixing procedures specified in **Section VII.D.2.a**. If the test chemical dissolves in Chemical Dilution Medium at 2 mg/mL, no further procedures are necessary. If the test chemical does NOT dissolve, weigh out approximately 100 mg test chemical in a second glass tube and add enough DMSO to

make the total volume approximately 0.5 mL (for 200 mg/mL) and attempt to dissolve the chemical as specified in **Section VII.D.2.a**. If the test chemical does not dissolve in DMSO, weigh out approximately 100 mg test chemical in another glass tube and add enough ethanol to make the total volume approximately 0.5 mL (for 200 mg/mL) and attempt to dissolve the chemical as specified in **Section VII.D.2.a**. If the chemical is soluble in either solvent, no additional solubility procedures are needed.

c) If the chemical is NOT soluble in Chemical Dilution Medium, DMSO, or ethanol at Tier 2, then continue to Tier 3 in Table 2 by adding enough solvent to increase the volume of the three Tier 2 solutions by 10 and attempt to solubilize again using the sequence of mixing procedures in **Section VII.D.2.a.** If the test chemical dissolves, no additional solubility procedures are necessary. If the test chemical does NOT dissolve, continue with Tier 4 and, if necessary, Tier 5 using DMSO and ethanol. Tier 4 begins by diluting the Tier 3 samples with DMSO or ethanol to bring the total volume to 50 mL. The mixing procedures in **Section VII.D.2.a** are again followed to attempt to solubilize the chemical. Tier 5 is performed, if necessary, by weighing out another two more samples of test chemical at ~10 mg each and adding ~50 mL DMSO or ethanol for a 200 µg/mL solution, and following the mixing procedures in **Section VII.D.2.a**.

<u>Example</u>: If complete solubility is not achieved at 20,000 µg/mL in Chemical Dilution Medium at Tier 1 using the mixing procedures specified in **Section VII.D.2.a,** then the procedure continues to Tier 2 by diluting the solution to 5 mL and mixing again as specified in **Section VII.D.2.a.** If the chemical is not soluble in Chemical Dilution Medium, two samples of ~ 100 mg test chemical are weighed to attempt to solubilize in DMSO and ethanol at 200,000 µg/mL (i.e., 200 mg/mL). Solutions are mixed following the sequence of procedures prescribed in **Section VII.D.2.a** in an attempt to dissolve. If solubility is not achieved at Tier 2, then the solutions (Chemical Dilution Medium, DMSO, and ethanol) prepared in Tier 2 are diluted by 10 so as to test 200 µg/mL in media, and 20,000 µg/mL in DMSO and ethanol. This advances the procedure to Tier 3. Solutions are again mixed as prescribed in **Section VII.D.2.a** in an attempt to dissolve. If solubility is not achieved in Tier 3, the procedure continues to Tier 4, and to 5 if necessary (see **Figure 1** and **Table 2**).

**Table 2 Determination of Solubility in Chemical Dilution Medium, DMSO, or Ethanol**

| TIER | 1 | 2 | 3 | 4 | 5 |
|---|---|---|---|---|---|
| Total Volume Chemical Dilution Medium | 0.5 mL | 5 mL | 50 mL | | |
| Concentration of Test Chemical (Add ~10 mg to a tube. Add enough medium to equal the first volume. Dilute to subsequent volumes if necessary.) | 20,000 µg/mL (20 mg/mL) | 2,000 µg/mL (2 mg/mL) | 200 µg/mL (0.20 mg/mL) | | |
| Total Volume DMSO/Ethanol | | 0.5 mL | 5 mL | 50 mL | |
| Concentration of Test Chemical (Add ~100 mg to a large tube. Add enough DMSO or ethanol to equal the first volume. Dilute to subsequent volumes if necessary.) | | 200,000 µg/mL (200 mg/mL) | 20,000 µg/mL (20 mg/mL) | 2,000 µg/mL (2 mg/mL) | |
| Total Volume DMSO/Ethanol | | | | | 50 mL |
| Concentration of Test Chemical (Add ~10 mg to a large tube. Add enough DMSO or ethanol to equal 50 mL.) | | | | | 200 µg/mL (0.2 mg/mL) |
| Equivalent Concentration on Cells | 10,000 µg/mL (10 mg/mL) | 1000 µg/mL (1 mg/mL) | 100 µg/mL (0.1 mg/mL) | 10 µg/mL (0.01 mg/mL) | 1 µg/mL (0.001 mg/mL) |

[NOTE: The amounts of test chemical weighed and Chemical Dilution Medium added may be modified from the amounts given above, provided that the targeted concentrations specified for each tier are tested.]

## *Figure 1. Solubility Flow Chart*

**TIER 1**

| | |
|---|---|
| STEP 1: | 20 mg/mL test chemical (TC) in 0.5 mL Chemical Dilution Medium:<br>• if TC soluble, then **STOP**.<br>• if TC insoluble, then go to STEP 2. |

**TIER 2**

| | |
|---|---|
| STEP 2: | 2 mg/mL TC in medium – increase volume from STEP 1 by 10 (i.e., to 5 mL)<br>• if TC soluble, then **STOP**.<br>• if TC insoluble, then go to STEP 3. |
| STEP 3: | 200 mg/mL TC in DMSO<br>• if TC soluble, then **STOP**.<br>• if TC insoluble, test at 200 mg/mL in ETOH.<br>  • if TC soluble, then **STOP.**<br>  • If TC insoluble, go to STEP 4. |

**TIER 3**

| | |
|---|---|
| STEP 4: | 0.2 mg/mL TC in medium – increase volume from STEP 2 by 10 (i.e., to 50 mL)<br>• if TC soluble, then **STOP**.<br>• if TC insoluble, test at 20 mg/mL in DMSO – increase volume from STEP 3 by 10 (i.e., to 5 mL).<br>  • if TC soluble, then **STOP.**<br>  • if TC insoluble, test at 20 mg/mL in ETOH – increase volume from STEP 3 by 10 (i.e., to 5 mL).<br>  • if TC soluble, then **STOP.**<br>  • if TC insoluble, then go to STEP 5. |

**TIER 4**

| | |
|---|---|
| STEP 5: | 2 mg/mL TC in DMSO – increase volume from STEP 4 by 10 (i.e., to 50 mL)<br>• if TC soluble, then **STOP.**<br>• if TC insoluble, test at 2 mg/mL in ETOH – increase volume from STEP 4 by 10 (i.e., to 50 mL).<br>  • if TC soluble, then **STOP.**<br>  • if TC insoluble, then go to STEP 6. |

**TIER 5**

| | |
|---|---|
| STEP 6: | 0.2 mg/mL TC in 50 mL DMSO<br>• if TC soluble, then **STOP.**<br>• if TC insoluble, test at 0.2 mg/mL in 50 mL ETOH<br>  • **STOP** |

**2. Mechanical Procedures**

a) The following hierarchy of mixing procedures will be followed to dissolve the test chemical:

1) Add test chemical to solvent as in Tier 1 of **Table 2**.

2) Gently mix. Vortex the tube (1 –2 minutes).

3) If test chemical hasn't dissolved, use sonication for up to 5 minutes.

4) If sonication doesn't work, then warm solution to 37°C for 5 - 60 min. This can be performed by warming tubes in a 37°C water bath or in a $CO_2$ incubator at 37°C. The solution may be stirred during warming (stirring in a $CO_2$ incubator will help maintain proper pH).

5) Proceed to Tier 2 (and Tiers 3-5, if necessary of Table 2 and repeat procedures 2-4).

b) The preference of solvent for dissolving test chemicals is Chemical Dilution Medium, DMSO, and then ethanol. Thus, if (all solvents for a particular tier are tested simultaneously and) a test chemical dissolves in more than one solvent, then the choice of solvent follows this hierarchy. For example, if, at any tier, a chemical is soluble in Chemical Dilution Medium and DMSO, but not ethanol, the choice of solvent would be medium. If the chemical were insoluble in medium, but soluble in DMSO and ethanol, the choice of solvent would be DMSO.

After the lab has determined the preferred solvent for the test chemical and before proceeding to the cytotoxicity testing, the Study Director will discuss the solvent selection with the Study Management Team (SMT) of the validation study. The SMT will relate what solvent should be used in the assay for each chemical. If the laboratory has attempted all solubility testing without success, then the SMT will provide additional guidance for achieving test chemical solubility. The SMT anticipates that all validation study test chemicals will be tested in the NRU assays.

**E. Preparation of Test Chemicals**

[Note: Preparation under red or yellow light is recommended to preserve chemicals that degrade upon exposure to light.]

**1. Test Chemicals in Solution**

a) Allow test chemicals to equilibrate to room temperature before dissolving and diluting.

b) Prepare test chemical immediately prior to use. Test chemical solutions should not be prepared in bulk for use in subsequent tests. The solutions must not be cloudy nor have noticeable precipitate. Each stock dilution should have at least 1-2 mL total volume to ensure adequate solution for the test wells in a single 96-well plate. The SMT may direct the Study Director to store an aliquot (e.g., 1 mL) of the highest 2X

stock solution (e.g., low solubility chemicals) in a freezer (e.g., -70°C) for use in future chemical analyses.

c) For chemicals dissolved in DMSO or ethanol, the final DMSO or ethanol concentration for application to the cells must be 0.5 % (v/v) in the vehicle controls and in all of the eight test concentrations.

d) The stock solution for each test chemical should be prepared at the highest concentration found to be soluble in the solubility test. Thus, the highest test concentration applied to the cells in each range finding experiment is:
   - 0.5 times the highest concentration found to be soluble in the solubility test, if the chemical was soluble in Chemical Dilution Medium, or
   - 1/200 the highest concentration found to be soluble in the solubility test if the chemical was soluble in ethanol or DMSO.

e) The seven lower concentrations in the range finding experiment would then be prepared by successive dilutions that decrease by one log unit each. The following example illustrates the preparation of test chemical in solvent and the dilution of dissolved test chemical in Chemical Dilution Medium before application to 3T3 cells.

<u>Example</u>: Preparation of Test Chemical in Solvent Using a Log Dilution Scheme

If DMSO was determined to be the preferred solvent at Tier 2 of the solubility test (i.e., 200,000 µg/mL), dissolve the chemical in DMSO at 200,000 µg/mL for the chemical stock solution.

1) Label eight tubes 1 – 8. Add 0.9 mL solvent (e.g., DMSO) to tubes 2 -- 8.

2) Prepare stock solution of 200,000 µg test chemical/mL solvent in tube # 1.

3) Add 0.1 mL of 200,000 µg/mL dilution from tube #1 to tube #2 to make a 1:10 dilution in solvent (i.e., 20,000 µg/mL).

4) Add 0.1 mL of 20,000 µg/mL dilution from tube #2 to tube #3 to make another 1:10 dilution (i.e., 1:100 dilution from stock solution) in solvent (i.e., 2,000 µg/mL)

5) Continuing making serial 1:10 dilutions in the prepared solvent tubes.

6) Since each concentration is 200 fold greater than the concentration to be tested, make a 1:100 dilution by diluting 1 part dissolved chemical in each tube with 99 parts of Chemical Dilution Medium (e.g., 0.1 mL test chemical in DMSO + 9.9 mL Chemical Dilution Medium) to derive the eight 2X concentrations for application to 3T3 cells. Each 2X test chemical concentration will then contain 1 % v/v solvent. The 3T3 cells will have 0.05 mL Routine Culture Medium in the wells prior to application of the test chemical. By adding 0.05 mL of the appropriate 2X test chemical concentration to the appropriate wells, the test chemical will be diluted appropriately (e.g., highest concentration in well will be 1,000 µg/mL) in a total of 0.1 mL and the solvent concentration in the wells will be 0.5% v/v.

7) A test article prepared in Chemical Dilution Medium, DMSO, or ethanol may precipitate upon transfer into the Routine Culture Medium. The 2X dosing solutions

should be evaluated for precipitates and the results will be recorded in the workbook. It will be permissible to test all of the dosing solutions in the dose range finding assay only. Doses containing test article precipitates should be avoided, and will not be used in the ICx determinations for either the range finding experiments or the definitive tests.

Document all test chemical preparations in the Study Workbook.

**2. pH of Test Chemical Solutions**

Measure the pH of the highest concentration of the test chemical in culture medium using pH paper (e.g., pH 0 - 14 to estimate and pH 5 – 10 to determine more precise value). The pH paper should be in contact with the solution for approximately one minute. Document the final pH (i.e., in the EXCEL template) and note the color of the medium for all dilutions. Do not adjust the pH.

**3. Concentrations of Test Chemical**

a) Range Finder Experiment

Test eight concentrations of the test chemical by diluting the stock solution with a constant factor covering a large range. The initial dilution series shall be log dilutions (e.g., 1:10, 1:100, 1:1000, etc.).

The data from any well that has precipitate will be excluded from any calculations.

b) Main Experiment

[Note: After the range finding assay is completed, the concentration-response experiment shall be performed <u>three times on three different days for each chemical (i.e., one plate per day per chemical</u>.]

Depending on the slope of the concentration-response curve estimated from the range finder, the dilution/progression factor in the concentration series of the main experiment should be smaller ($\sqrt[6]{10} = 1.47$). Cover the relevant concentration range (≥10 % and ≤ 90 % effect) preferably with three points of a graded effect, but with a minimum of two points, one on each side of the estimated $IC_{50}$ value, avoiding too many <u>non-cytotoxic</u> and/or <u>100 %-cytotoxic</u> concentrations. Experiments revealing less than one cytotoxic concentration on each side of the $IC_{50}$ value shall be repeated, where possible, with a smaller dilution factor. Each experiment should have at least one cytotoxicity value ≥ 10.0 % and ≤ 50.0 % viability and at least one cytotoxicity value > 50.0 % and ≤ 90.0 % viability. In addition, the dilution scheme shall be adjusted in subsequent replicate assays (i.e., definitive assays), if necessary, to increase the number of points on both sides of the $IC_{50}$ in the 10-90% response range. (Taking into account pipetting errors, a progression factor of 1.21 is regarded the smallest factor achievable.)

Determine which test chemical concentration is closest to the $IC_{50}$ value (e.g., 50 % cytotoxicity). Use that value as a central concentration and adjust dilutions higher and lower in equal steps for the definitive assay.

Maximum Doses to be Tested in the Main Experiments

If minimal or no cytotoxicity was measured in the dose range finding assay, a maximum dose for the main experiments will be established as follows:

- For test chemicals prepared in Chemical Dilution Medium, the highest test article concentration that may be applied to the cells in the main experiments will be either 100 mg/mL, or the maximum soluble dose. Test chemical will be weighed into a glass tube and the weight will be documented. A volume of Chemical Dilution Medium will be added to the vessel so that the concentration is 200,000 µg/mL (200 mg/mL). The solution is mixed as specified in **Section VII.D.2.a**. If complete solubility is achieved in medium, then 7 additional serial stock dosing solutions may be prepared from the 200 mg/mL 2X stock. If the test chemical is insoluble in medium at 200 mg/ml, proceed by adding medium, in small incremental amounts, to attempt to dissolve the chemical by using the sequence of mixing procedures specified in **Section VII.D.2.a**. The highest soluble stock solution will be used to prepare the 7 additional serial stock dosing solutions.

- For test chemicals prepared in either DMSO or ethanol, the highest test article concentration that may be applied to the cells in the main experiments will be either 2.5 mg/mL, or less, depending upon the maximum solubility in solvent. Test chemical will be weighed into a glass tube and the weight will be documented. A volume of the appropriate solvent (determined from the original solubility test) will be added to the vessel so that the concentration is 500,000 µg/mL (500 mg/mL). The solution is mixed as specified in **Section VII.D.2.a**. If complete solubility is achieved in the solvent, then 7 additional serial stock dosing solutions may be prepared from the 500 mg/mL 200X stock. If the test chemical is insoluble in solvent at 500 mg/ml, proceed by adding solvent, in small incremental amounts, to attempt to dissolve the chemical by using the sequence of mixing procedures specified in **Section VII.D.2.a**. The highest soluble stock solution will be used to prepare the 7 additional serial stock dosing solutions.

c) Test Chemical Dilutions

The dosing factor of 3.16 (= $\sqrt[2]{10}$) divides a log into two equidistant steps, a factor of 2.15 (= $\sqrt[3]{10}$) divides a decade into three steps. The factor of 1.47 (= $\sqrt[6]{10}$) divides a log into six equidistant steps, and the factor of 1.21 (= $\sqrt[12]{10}$) divides the log into 12 steps.

EXAMPLE:

| | | | | | | | | | | | | |
|---|---|---|---|---|---|---|---|---|---|---|---|---|
| 10 | | | | | | 31.6 | | | | | | 100 |
| 10 | | | | 21.5 | | | | 46.4 | | | | 100 |
| 10 | | 14.7 | | 21.5 | | 31.6 | | 46.4 | | 68.1 | | 100 |
| 10 | 12.1 | 14.7 | 17.8 | 21.5 | 26.1 | 31.6 | 38.3 | 46.4 | 56.2 | 68.1 | 82.5 | 100 |

The technical production of decimal geometric concentration series is simple. An example is given for factor 1.47:

*Dilute 1 volume of the highest concentration by adding 0.47 volumes of diluent. After equilibration, dilute 1 volume of this solution by adding 0.47 volumes of diluent...(etc.).*

## F. Test Procedure

### 1. 96-Well Plate Configuration

The 3T3 NRU assay for test chemicals will use the 96-well plate configuration as shown in **Figure 2**.

***Figure 2. 96-Well Plate Configuration for Positive Control and Test Chemical Assays***

| | 1 | 2 | 3 | 4 | 5 | 6 | 7 | 8 | 9 | 10 | 11 | 12 |
|---|---|---|---|---|---|---|---|---|---|---|---|---|
| A | VCb | VCb | $C_1$b | $C_2$b | $C_3$b | $C_4$b | $C_5$b | $C_6$b | $C_7$b | $C_8$b | VCb | VCb |
| B | VCb | VC | $C_1$ | $C_2$ | $C_3$ | $C_4$ | $C_5$ | $C_6$ | $C_7$ | $C_8$ | VC | VCb |
| C | VCb | VC | $C_1$ | $C_2$ | $C_3$ | $C_4$ | $C_5$ | $C_6$ | $C_7$ | $C_8$ | VC | VCb |
| D | VCb | VC | $C_1$ | $C_2$ | $C_3$ | $C_4$ | $C_5$ | $C_6$ | $C_7$ | $C_8$ | VC | VCb |
| E | VCb | VC | $C_1$ | $C_2$ | $C_3$ | $C_4$ | $C_5$ | $C_6$ | $C_7$ | $C_8$ | VC | VCb |
| F | VCb | VC | $C_1$ | $C_2$ | $C_3$ | $C_4$ | $C_5$ | $C_6$ | $C_7$ | $C_8$ | VC | VCb |
| G | VCb | VC | $C_1$ | $C_2$ | $C_3$ | $C_4$ | $C_5$ | $C_6$ | $C_7$ | $C_8$ | VC | VCb |
| H | VCb | VCb | $C_1$b | $C_2$b | $C_3$b | $C_4$b | $C_5$b | $C_6$b | $C_7$b | $C_8$b | VCb | VCb |

VC = untreated VEHICLE CONTROL (mean viability set to 100 %)
$C_1 – C_8$ = Test Chemicals or Positive Control (SLS) at eight concentrations (C1 = highest, C8 = lowest)
b = BLANKS (contain **no** cells)
VCb = VEHICLE CONTROL BLANK

### 2. Application of Test Chemical

a) Two optional methods for rapidly applying the 2X dosing solutions onto the 96-well plates may be utilized.

1) The first method is to add each of the 2X dosing solutions into labeled, sterile reservoirs (e.g., Corning/Costar model 4870 sterile polystyrene 50 mL reagent reservoirs; or Corning/Transtar model 4878 disposable reservoir liners, 8-channel; or other multichannel reservoirs).

2) The second method utilizes a "dummy" plate (i.e., an empty sterile 96-well plate) prepared to hold the dosing solutions immediately prior to treatment of the test plate (with cells). The test chemical and control dosing solutions should be dispensed into the dummy plate in the same pattern/order as will be applied to the

plate containing cells. More volume than needed for the test plate (i.e. greater than 50 µl/well) should be in the wells of the dummy plate.

At the time of treatment initiation, a multi-channel micropipettor is used to transfer the 2X dosing solutions, from the reservoirs or dummy plate, to the appropriate wells on the treatment plate (as described in step c. below). These methods will ensure that the dosing solutions can be transferred rapidly to the appropriate wells of the test plate to initiate treatment times and to minimize the range of treatment initiation times across a large number of treatment plates, and to prevent "out of order" dosing. Do not use a multichannel repeater pipette for dispensing test chemical to the plates.

b) After 24 h ± 2 h incubation of the cells, remove Routine Culture Medium from the cells by careful inversion of the plate (i.e., "dump") over an appropriate receptacle. Gently blot the plate on a sterile paper towel so that the monolayer is minimally disrupted. Do not use automatic plate washers for this procedure nor vacuum aspiration.

c) Immediately add 50 µL of fresh pre-warmed Routine Culture Medium to all of the wells, including the blanks. Fifty microliters (50 µL) of dosing solution will be rapidly transferred from the 8-channel reservoir (or dummy plate) to the appropriate wells of the test plate using a single delivery multi-channel pipettor. For example, the VC may be transferred first (into columns 1, 2, 11, and 12), followed by the test article dosing solutions from lowest to highest dose, so that the same pipette tips on the multi-channel pipettor can be used for the whole plate. [The Vehicle Control blank (VCb) wells (column 1, column 12, wells A2, A11, H2, H11) will receive the Vehicle Control dosing solutions (which should include any solvents used). Blanks for wells A3 – A10 and H3 – H10 shall receive the appropriate test chemical solutions for each concentration (e.g., wells A3 and H3 receive $C_1$ solution). [The test chemical blanks in rows A and H will be used for their respective test chemical concentrations.]

d) Incubate cells for 48 h ± 0.5 h (37ºC ± 1ºC, 90 % ± 5 % humidity, and 5.0 % ± 1 % $CO_2$/air).

e) **Positive Control**: For each set of test chemical plates used in an assay, a separate plate of positive control concentrations will be set up following the concentration range established in the development of the positive control database in Phase I of the Validation Study. If multiple sets of test chemical plates are set up, then clearly designate the positive control plates for each set; each set will be an individual entity. The mean $IC_{50}$ ± two and a half standard deviations (SD) for the SLS acceptable tests from Phases Ia and Ib (after the removal of outliers) are the values that will be used as an acceptance criterion for test sensitivity for the 3T3 NRU assay. This plate will follow the same schedule and procedures as used for the test chemical plates (including appropriate chemical concentrations in the appropriate wells – see sections VII.F.1 and F.2).

### 3. Microscopic Evaluation

After at least 46 h treatment, examine each plate under a phase contrast microscope to identify systematic cell seeding errors and growth characteristics of control and treated cells. Record any changes in morphology of the cells due to the cytotoxic effects of the

test chemical, but do not use these records for any quantitative measure of cytotoxicity. Undesirable growth characteristics of control cells may indicate experimental error and may be cause for rejection of the assay. Use the following Visual Observations Codes in the description of cell culture conditions.

**Visual Observations Codes**

| Note Code | Note Text |
|---|---|
| | |
| 1 | Normal Cell Morphology |
| 2 | Low Level of Cell Toxicity |
| 3 | Moderate Level of Cell Toxicity |
| 4 | High level of Cell Toxicity |
| 1P | Normal Cell Morphology with Precipitate |
| 2P | Low Level of Cell Toxicity with Precipitate |
| 3P | Moderate Level of Cell Toxicity with Precipitate |
| 4P | High level of Cell Toxicity with Precipitate |
| 5P | Unable to View Cells Due to Precipitate |

**4. Measurement of NRU**

a) Carefully remove (i.e., "dump") the medium with test chemical and rinse the cells very carefully with 250 µL pre-warmed D-PBS. Remove the rinsing solution by dumping and remove excess by gently blotting on sterile paper towels. Add 250 µL NR medium (to all wells including the blanks) and incubate (37ºC ± 1ºC, 90 % ± 5 % humidity, and 5.0 % ± 1 % $CO_2$/air) for 3±0.1 h. Observe the cells briefly during the NR incubation (e.g., between 2 and 3 h – Study Director's discretion) for NR crystal formation. Record observations in the Study Workbook. Study Director can decide to reject the experiment if excessive NR crystallization has occurred.

b) After incubation, remove the NR medium, and carefully rinse cells with 250 µl pre-warmed D-PBS.

c) Decant and blot D-PBS from the plate.

d) Add exactly 100 µl NR Desorb (ETOH/acetic acid) solution to all wells, including blanks.

e) Shake microtiter plate rapidly on a microtiter plate shaker for 20 – 45 min to extract NR from the cells and form a homogeneous solution. Plates should be protected from light by using a cover during shaking.

f) Plates should be still for at least five minutes after removal from the plate shaker (or orbital mixer). Observe the wells for bubbles. Measure the absorption (within 60 minutes of adding NR Desorb solution) of the resulting colored solution at 540 nm ± 10 nm in a microtiter plate reader (spectrophotometer), using the blanks as a reference. [Note: Phases Ia and Ib data show the mean OD value for the plate blanks to be 0.057 ± 0.043 for 3T3 cells (± 2.5 standard deviations; data from 3 labs; N = 189). Use this range as a **guide** for assessment of the blank values.] Save raw data in the Excel format as provided by the SMT.

## 5. Quality Check of 3T3 NRU Assay

a) Test Acceptance Criteria

1) A test meets acceptance criteria, if the $IC_{50}$ for SLS (PC) is within ± two and a half (2.5) standard deviations of the historical mean established by the Test Facility (as per **VII.F.2.e**).

2) A test meets acceptance criteria if the left and the right mean of the VCs do not differ by more than 15.0 % from the mean of all VCs.

3) A test meets acceptance criteria if:
   - at least one calculated cytotoxicity value ≥ 10.0 % and ≤ 50.0 % viability and
   - at least one calculated cytotoxicity value > 50.0 % and ≤ 90.0 % viability.

4) A test meets acceptance criteria if the $r^2$ (coefficient of determination) value calculated for the Hill model fit (i.e., from PRISM® software) is ≥ 0.90. A test does not meet acceptance criteria if the $r^2$ value is < 0.80. If the $r^2$ value is ≥ 0.80 and < 0.90 ("gray zone"), then the SMT will evaluate the model fit and make the determination of whether or not the test meets the acceptance criteria and relate the information to the Study Director.

   [Note: All acceptance criteria must be met for an assay to be considered acceptable.]

   [A corrected mean $OD_{540 \pm 10nm}$ of 0.103 - 0.813 for the VCs is a target range but will not be a test acceptance criterion. Range determined from Phase Ib VC OD values from 3 laboratories (mean ± 2.5 standard deviations, N = 98).]

b) Checks for Systematic Cell Seeding Errors

To check for systematic cell seeding errors, untreated VCs are placed both at the left side (row 2) and the right side (row 11 for the test plates) of the 96-well plate. Aberrations in the cell monolayer for the VCs may reflect a volatile and toxic test article present in the assay.

Checks for cell seeding errors may also be performed by examining each plate under a phase contrast microscope to assure that cell quantity is consistent.

c) Quality Check of Concentration-Response

The $IC_{50}$ derived from the concentration-response of the test chemicals will be backed by preferably three responses ≥ 10 % and ≤ 90 % inhibition of NRU and at least two responses, one on either side of the $IC_{50}$ value (see sections **VII.E.3.b** and **VII.F.5.a.3**). If this is not the case, and the concentration progression factor can be easily reduced, reject the experiment and repeat it with a smaller progression factor. In addition, the dilution scheme shall be adjusted in subsequent replicate assays, if necessary, to increase the number of points on both sides of the $IC_{50}$ in the 10-90% response range. Numerical scoring of the cells (see **VII.F.3**) should be determined and documented in the Study Workbook.

### G. Data Analysis

A calculation of cell viability expressed as NRU is made for each concentration of the test chemical by using the mean NRU of the six replicate values (minimum of four acceptable replicate well) per test concentration (blanks will be subtracted). The Study Director will use good biological/scientific judgment for determining "unusable" wells that will be excluded from the statistical analysis. This value is compared with the mean NRU of all VC values (provided VC values have met the VC acceptance criteria). Relative cell viability is then expressed as percent of untreated VC. If achievable, the eight concentrations of each chemical tested will span the range of no effect up to total inhibition of cell viability. Data from the microtiter plate reader shall be transferred to the Excel® spreadsheet (template with macros provided by the SMT) that will automatically determine cell viability and perform statistical analyses (including determination of outliers).

The concentration of a test chemical reflecting a 20 %, 50 %, and 80 % inhibition of cell viability (i.e., the $IC_{20}$, $IC_{50}$, and $IC_{80}$) is determined from the concentration-response by applying a Hill function to the concentration-response data. Statistical software (e.g., GraphPad PRISM® 3.0) specified by the SMT shall be used to calculate $IC_{20}$, $IC_{50}$, and $IC_{80}$ values (and the associated confidence limits) for each test chemical. In addition, the SMT shall provide guidelines for calculating ICx values and confidence limits. The Testing Facility shall report data using at least three (3) significant figures and shall forward the results from each assay to the SMT/biostatistician through the designated contacts in electronic format and hard copy upon completion of testing. The SMT will be directly responsible for the statistical analyses of the Validation Study data.

## VIII. REFERENCES

Hackenberg, U. and H. Bartling. 1959. Messen und Rechnen im pharmakologischen Laboratorium mit einem speziellen Zahlensystem (WL24-System). Arch. Exp. Pathol. Pharmakol. 235: 437-463.

Spielmann, H., S. Gerner, S. Kalweit, R. Moog, T. Wirnserberger, K. Krauser, R. Kreiling, H. Kreuzer, N.P. Luepke, H.G. Miltenburger, N. Müller, P. Murmann, W. Pape, B. Siegmund, J. Spengler, W. Steiling, and F.J. Wiebel. 1991. Interlaboratory assessment of alternatives to the Draize eye irritation test in Germany. Toxicol. *In Vitro* 5: 539-542.

## IX. APPROVAL

_____ _____

**SPONSOR REPRESENTATIVE** **DATE**
**(Print or type name)**

_____ _____

**Test Facility STUDY DIRECTOR** **DATE**
**(Print or type name)**

# Appendix C6

## Test Method Protocol for the Normal Human Epidermal Keratinocyte (NHK) Neutral Red Uptake Cytotoxicity Test (Phase II)

***[This Page Intentionally Left Blank]***

# TEST METHOD PROTOCOL
# for the NHK Neutral Red Uptake Cytotoxicity Test

**A Test for Basal Cytotoxicity for an In Vitro Validation Study**
**Phase II**

**May 15, 2003**

**Prepared by**

**The National Toxicology Program (NTP) Interagency Center for the Evaluation of Alternative Toxicological Methods (NICEATM)**

**Based on Standard Operating Procedure Recommendations from an International Workshop Organized by the Interagency Coordinating Committee on the Validation of Alternative Methods (ICCVAM)**

**National Institute of Environmental Health Sciences (NIEHS)**
**National Institutes of Health (NIH)**
**U.S. Public Health Service**
**Department of Health and Human Services**

# TEST METHOD PROTOCOL

## The Normal Human Keratinocyte (NHK) Neutral Red Uptake Cytotoxicity Test
## A Test for Basal Cytotoxicity
## Phase II

### I. PURPOSE

The purpose of this study is to evaluate the cytotoxicity of test chemicals using the Normal Human Keratinocyte (NHK) Neutral Red Uptake (NRU) cytotoxicity test. The data will be used to evaluate the intra- and inter-laboratory reproducibility of the assay and effectiveness of the cytotoxicity assay to predict the starting doses for rodent acute oral systemic toxicity assays. This test method protocol outlines the procedures for performing the cytotoxicity test and is in support of the *in vitro* validation study organized by NICEATM and the European Centre for the Validation of Alternative Methods (ECVAM) and sponsored by NIEHS, U.S. Environmental Protection Agency, and ECVAM. This test method protocol applies to all personnel involved with performing the cytotoxicity assay.

#### A. NHK Neutral Red Uptake Cytotoxicity Test

The NHK NRU test will be performed to analyze the *in vitro* toxicity of nine (9) blinded/coded test chemicals. This test will be used to determine $IC_{20}$, $IC_{50}$, and $IC_{80}$ values for the predetermined set of test chemicals of varying toxicities.

### II. SPONSOR

**A. Name**: National Institute of Environmental Health Sciences (NIEHS); The National Toxicology Program (NTP) Interagency Center for the Evaluation of Alternative Toxicological Methods (NICEATM)

**B. Address**: P.O. Box 12233
Research Triangle Park, NC 27709

**C. Representative**: *Named Representative*

### III. IDENTIFICATION OF TEST AND CONTROL SUBSTANCES

**A. Test Chemicals**: *Blinded chemicals (9)*

**B. Controls**:

| | |
|---|---|
| Positive: | Sodium Lauryl Sulfate |
| Vehicle (Negative): | Assay medium |
| Solvent (as needed): | Assay medium with appropriate solvent used to prepare the test chemicals (**Section VII.E**) |

## IV. TESTING FACILITY AND KEY PERSONNEL

### A. Facility Information

1) Name:
2) Address:
3) Study Director:
4) Laboratory Technician(s):
5) Scientific Advisor:
6) Quality Assurance Director:
7) Safety Manager:
8) Facility Management:

### B. Test Schedule

1) Proposed Experimental Initiation Date:
2) Proposed Experimental Completion Date:
3) Proposed Report Date:

## V. TEST SYSTEM

The NRU cytotoxicity assay procedure is a cell survival/viability chemosensitivity assay based on the ability of viable cells to incorporate and bind neutral red (NR), a supravital dye. NR is a weak cationic dye that readily penetrates cell membranes by non-ionic diffusion and accumulates intracellularly in lysosomes. Alterations of the cell surface or the sensitive lysosomal membrane lead to lysosomal fragility and other changes that gradually become irreversible. Such changes brought about by the action of xenobiotics result in a decreased uptake and binding of NR. It is thus possible to distinguish between viable, damaged, or dead cells, which is the basis of this assay.

Healthy mammalian cells, when maintained in culture, continuously divide and multiply over time. A toxic chemical, regardless of site or mechanism of action, will interfere with this process and result in a reduction of the growth rate as reflected by cell number. Cytotoxicity is expressed as a concentration dependent reduction of the uptake of the NR after chemical exposure thus providing a sensitive, integrated signal of both cell integrity and growth inhibition.

## VI. DEFINITIONS

**A.**. *Hill function*: a four parameter logistic mathematical model relating the concentration of test chemical to the response being measured in a sigmoidal shape.

$$Y = \text{Bottom} + \frac{\text{Top} - \text{Bottom}}{1 + 10^{(\text{logIC50} - X)\text{HillSlope}}}$$

where Y= response, X is the logarithm of dose (or concentration), Bottom is the minimum response, Top is the maximum response, logIC50 is logarithm of X at the response midway between Top and Bottom, and HillSlope describes the steepness of the curve.

**B.** *Documentation*: all methods and procedures will be noted in a Study Workbook; logs will be maintained for general laboratory procedures and equipment (e.g., media preparation, test chemical preparation, incubator function); all optical density data obtained from the

spectrophotometer plate reader will be saved in electronic and paper formats; all calculations of ICx values and other derived data will be in electronic and paper format; all data will be archived.

## VII. PROCEDURES

### A. Materials

[Note: Suggested brand names/vendors are listed in parentheses. Equivalents may be used unless otherwise noted.]

#### 1. Cell Lines

**Normal Human Epidermal Keratinocytes (NHK)**

Non-transformed cells; from cryopreserved primary or secondary cells (**Clonetics #CC-2507 or equivalent).** Cells will be Clonetics NHK cells.

*Cambrex* [Cambrex Bio Science, 8830 Biggs Ford Road, Walkersville, MD 21793-0127

*Cambrex Europe* [Cambrex Bio Science Verviers, S.P.R.L. Parc Industriel de Petit Rechain, B-4800 Verviers, BELGIUM]

#### 2. Technical Equipment

[Note: Suggested brand names/vendors are listed in parentheses. Equivalents may be used.]

a) Incubator: 37ºC ± 1ºC, 90 % ± 5 % humidity, 5.0 % ± 1 % $CO_2$/air
b) Laminar flow clean bench (standard: "biological hazard")
c) Water bath: 37ºC ± 1ºC
d) Inverse phase contrast microscope
e) Sterile glass tubes with caps (e.g., 5mL)
f) Centrifuge (optionally: equipped with microtiter plate rotor)
g) Laboratory balance
h) 96-well plate spectrophotometer (i.e., plate reader) equipped with 540 nm ± 10 nm filter
i) Shaker for microtiter plates
j) Cell counter or hemocytometer
k) Pipetting aid
l) Pipettes, pipettors (multi-channel and single channel; multichannel repeater pipette), dilution block
m) Cryotubes
n) Tissue culture flasks (75 - 80 $cm^2$, 25 $cm^2$)
o) 96-well flat bottom tissue culture microtiter plates (e.g., Nunc # 167 008; Corning/COSTAR tissue culture-treated)
p) pH paper (wide and narrow range)
q) Multichannel reagent reservoir
r) Waterbath sonicator
s) Magnetic stirrer

t) Antistatic bar ionizer/antistatic gun (optional for neutralizing static on 96-well plates)
u) Dry heat block (optional)

[Note: Tissue culture flasks and microtiter plates should be prescreened to ensure that they adequately support the growth of NHK. Multi-channel repeater pipettes may be used for plating cells in the 96-well plates, dispensing plate rinse solutions, NR medium, and desorb solution. Do not use the repeater pipette for dispensing test chemicals to the cells.]

**3. Chemicals, Media, and Sera**

a) Keratinocyte Basal Medium without $Ca^{++}$ (KBM®, Clonetics CC-3104) that is completed by adding the KBM® SingleQuots® (Clonetics CC-4131) to achieve the proper concentrations of epidermal growth factor, insulin, hydrocortisone, antimicrobial agents, bovine pituitary extract, and calcium (e.g., Clonetics Calcium SingleQuots®, 300 mM $CaCl_2$, Clonetics # CC-4202).
b) HEPES Buffered Saline Solution (HEPES-BSS) (e.g., Clonetics # CC-5022)
c) 0.025 % Trypsin/EDTA solution (e.g., Clonetics # CC-5012)
d) Trypsin Neutralizing Solution (TNS) (e.g., Clonetics # CC-5002)
e) Phosphate Buffered Saline (PBS)
f) Dulbecco's Phosphate Buffered Saline (D-PBS) [formulation containing calcium and magnesium cations; glucose optional] (for rinsing)
g) Neutral Red (NR) Dye – tissue culture-grade; liquid form (e.g., SIGMA N 2889); powder form (e.g., SIGMA N 4638)
h) Dimethyl sulfoxide (DMSO), U.S.P analytical grade (Store under nitrogen @ -20ºC)
i) Ethanol (ETOH), U.S.P. analytical grade (100 %, non-denatured for test chemical preparation; 95 % can be used for the desorb solution)
j) Glacial acetic acid, analytical grade
k) Hanks' Balanced Salt Solution without $Ca^{2+}$ or $Mg^{2+}$ (CMF-HBSS) (e.g., Invitrogen # 14170)
l) Distilled $H_2O$ or any purified water suitable for cell culture (sterile)
m) Sterile paper towels (for blotting 96-well plates)

**B. Preparations of Media and Solutions**

[Note: All solutions (except NR stock solution, NR medium and NR desorb), glassware, pipettes, etc., shall be sterile and all procedures should be carried out under aseptic conditions and in the sterile environment of a laminar flow cabinet (biological hazard standard). All methods and procedures will be adequately documented.]

**1. Media**

a) Routine Culture Medium/Treatment Medium

KBM® (Clonetics CC-3104) supplemented with KBM® SingleQuots® (Clonetics CC-4131) and Clonetics Calcium SingleQuots® (CC-4202) to make 500 mL medium. Final concentration of supplements in medium are:

| | |
|---|---|
| 0.0001 ng/mL | Human recombinant epidermal growth factor |
| 5 µg/mL | Insulin |
| 0.5 µg/mL | Hydrocortisone |

| | |
|---|---|
| 30 µg/mL | Gentamicin |
| 15 ng/mL | Amphotericin B |
| 0.10 mM | Calcium |
| 30 µg/mL | Bovine pituitary extract |

*Complete media should be kept at 2-8°C and stored for no longer than two weeks*.

NOTE:
KBM® SingleQuots® contain the following stock concentrations and volumes:

| | | |
|---|---|---|
| 0.1 ng/mL | hEGF | 0.5 mL |
| 5.0 mg/mL | Insulin | 0.5 mL |
| 0.5 mg/mL | Hydrocortisone | 0.5 mL |
| 30 mg/mL | Gentamicin, 15 ug/mL Amphotericin-B | 0.5 mL |
| 7.5 mg/mL | Bovine Pituitary Extract (BPE) | 2.0 mL |

Clonetics Calcium SingleQuots® are 2 mL of 300mM calcium.

165 µl of solution per 500 mL calcium-free medium equals 0.10 mM calcium in the medium.

**2. Neutral Red (NR) Stock Solution**

The liquid tissue culture-grade stock NR Solution will be the first choice for performing the assay (e.g., SIGMA #N2889, 3.3 mg/mL). Store liquid tissue culture-grade NR Stock Solution at the storage conditions and shelf-life period recommended by the manufacturer.

If the liquid form is not available, the following formulation can be prepared.

EXAMPLE: 0.33 g NR Dye powder in 100 mL $H_2O$

The NR Stock Solution (powder in water) should be stored in the dark at room temperature for up to two months.

**3. Neutral Red (NR) Medium**

EXAMPLE:

| | |
|---|---|
| 1.0 mL (3.3 mg NR dye/mL) | NR Stock Solution |
| 99.0 mL | Routine Culture Medium (pre-warmed to 37° C.) |

The final concentration of the NR Medium is **33 µg NR dye/mL** and aliquots will be prepared on the day of application.

[Note: The NR Medium shall be filtered (e.g., Millipore filtering, 0.2 – 0.45 µm pore size) used to reduce NR crystals. Aliquots of the NR Medium should be maintained at 37° C (e.g., in a waterbath) before adding to the cells and used within 30 min of preparation but also used within 15 min after removing from 37° C storage.]

**4. Ethanol/Acetic Acid Solution (NR Desorb)**

| | |
|---|---|
| 1 % | Glacial acetic acid solution |
| 50 % | Ethanol |
| 49 % | $H_2O$ |

## C. Methods

### 1. Cell Maintenance and Culture Procedures

NHK cells are routinely grown as a monolayer in tissue culture grade flasks (e.g., 25 $cm^2$) at 37ºC ± 1ºC, 90 % ± 5 % humidity, and 5.0 % ± 1 % $CO_2$/air. The cells should be examined on a daily (i.e., on workdays) basis under a phase contrast microscope, and any changes in morphology or their adhesive properties must be noted in a Study Workbook.

### 2. Receipt of Cryopreserved Keratinocytes

Upon receipt of cryopreserved keratinocytes, the vial(s) of cells shall be stored in a liquid nitrogen freezer until needed.

### 3. Thawing Cells and Establishing Cell Cultures

a) Thaw cells by putting ampules into a water bath at 37°C for as brief a time as possible. Do not thaw cells at room temperature or by hand. Seed the thawed cells into culture flasks as quickly as possible and with minimal handling.

b) Slowly (taking approximately 1-2 min) add 9 mL of pre-warmed Routine Culture Medium to the cells suspended in the cryoprotective solution and transfer cells into flasks containing pre-warmed Routine Culture Medium (See Table 1).

c) Incubate the cultures at 37ºC ± 1ºC, 90 % ± 5 % humidity, 5.0 % ± 1 % $CO_2$/air until the cells attach to the flask (within 4 to 24 h), at which time the Routine Culture Medium should be removed and replaced with fresh Routine Culture Medium.

d) Unless otherwise specified, the cells should be incubated at 37ºC ± 1ºC, 90 % ± 5 % humidity, 5.0 % ± 1 % $CO_2$/air and fed every 2-3 days until they exceed 50 % confluence (but less than 80 % confluent).

**Table 1. Establishing Cell Cultures**

| Cells/25 $cm^2$ flask (in approximately 5 mL) 1 flask each cell concentration | $6.25 \times 10^4$ (2500/$cm^2$) | $1.25 \times 10^5$ (5000/$cm^2$) | $2.25 \times 10^5$ (9000/$cm^2$) |
|---|---|---|---|
| Approximate Time to Subculture | 96+ hours | 72 - 96 hours | 48 - 72 hours |
| Cells to 96-Well Plates | 6 – 8 plates | 6 – 8 plates | 6 – 8 plates |

Cell growth guidelines – actual growth of individual cell lots may vary.

### 4. Subculture of NHK Cells to 96-Well Plates

[Note: It is important that cells have overcome the lag growth phase when they are used for the test. Keratinocytes will be passaged only into the 96-well plates and will not be subcultured into flasks for use in later assays]

a) When the keratinocyte culture in a 25 $cm^2$ flask exceeds 50 % confluence (but less than 80 % confluent), remove the medium and rinse the culture twice with 5 mL HEPES-BSS. The first rinse may be left on the cells for up to 5 minutes and the second rinse should remain on the cells for approximately 5 minutes. Discard the washing solutions.

b) Add 2 mL trypsin/EDTA solution to each flask and remove after 15 to 30 seconds. Incubate the flask at room temperature for 3 to 7 min. When more than 50 % of the cells become dislodged, rap the flask sharply against the palm of the hand.

c) When most of the cells have become detached from the surface, rinse the flask with 5 mL of room temperature TNS. If more than one flask is subcultured, the same 5 mL of TNS may be used to rinse a total of up to two flasks.

d) Then rinse the flask with 5 mL CMF-HBSS and transfer the cell suspension to a centrifuge tube.

e) Pellet the cells by centrifugation for 5 min at approximately 220 x g. Remove the supernatant by aspiration.

f) Resuspend the keratinocyte pellet by gentle trituration (to have single cells) in Routine Culture Medium. It is important to obtain a single cell suspension for exact counting. Count a sample of the cell suspension using a hemocytometer or cell counter.

g) Prepare a cell suspension –1.6 – 2.0 $x10^4$ cells/mL in Routine Culture Medium. Using a multi-channel pipette, dispense 125 µl Routine Culture Medium only into the peripheral wells (blanks) of a 96-well tissue culture microtiter plate. In the remaining wells, dispense 125 µl of the cell suspension ($2x10^3$ – $2.5x10^3$ cells/well). Prepare one plate per chemical to be tested (see **Figure 2**, **Section VII.F.1**).

h) Incubate cells (37ºC ± 1ºC, 90 % ± 5.0 % humidity, and 5 % ± 1 % $CO_2$/air) so that cells form a 20+ % monolayer (~48-72 h). This incubation period assures cell recovery and adherence and progression to exponential growth phase.

i) Examine each plate under a phase contrast microscope to assure that cell growth is relatively even across the microtiter plate. This check is performed to identify experimental and systemic cell seeding errors. Record observations in the Study Workbook.

**5. Determination of Doubling Time**

a) A cell doubling time procedure was performed on the initial lot of cells that was used in the first cell culture assays of Phase Ia of the Validation Study. The doubling time only needs to be determined in Phase II if there is a change in the lot of cells used. Establish cells in culture and trypsinize cells as per **Section VII.C.4** for subculture. Resuspend cells in appropriate culture medium. Use **Table 1** to determine seeding densities.

b) Seed five sets of cell culture vessels in triplicate for each cell type (e.g., 15 tissue culture dishes [60mm x 15mm]). Use appropriate volume of culture medium for the culture vessels. Note number of cells placed into each culture dish. Place dishes into the incubators (37ºC ± 1ºC, 90 % ± 5 % humidity, 5.0 % ± 1 % $CO_2$/air).

c) After 4-6 hours (use the same initial measurement time for each subsequent doubling time experiment), remove three culture dishes and trypsinize cells. Count cells using a cell counter or hemocytometer. Cell viability may be determined by dye exclusion (e.g., Trypan Blue; Nigrosin). Determine the total number of cells and document. Repeat sampling at 24 hr, 48 hr, 72 hr, and 96 hr post inoculation. Change culture medium at 72 hr or sooner in remaining dishes if indicated by pH drop.

d) Plot cell concentration (per mL of medium) on a log scale against time on a linear scale. Determine lag time and population doubling time. The doubling time will be in the log (exponential) phase of the growth curve. Additional dishes and time are needed if the entire growth curve is to be determined (lag phase, log phase, plateau phase).

## D. Solubility Test

The preference of solvent for dissolving test chemicals is medium, DMSO, and then ethanol. Solubility shall be determined in a step-wise procedure that involves attempting to dissolve a test chemical at a relatively high concentration with the sequence of mechanical procedures specified in **Section VII.D.2.a.** If the chemical does not dissolve, the volume of solvent is increased so as to decrease the concentration by a factor of 10, and then the sequence of mechanical procedures in **Section VII.D.2.a** are repeated in an attempt to solubilize the chemical at the lower concentrations. For testing solubility in media, the starting concentration is 20,000 µg/ml (i.e., 20 mg/mL) in Tier 1, but for DMSO and ethanol the starting concentration is 200,000 µg/ml (i.e., 200 mg/mL) in Tier 2. Weighing out chemical for each solvent (i.e., media, DMSO, ethanol) can be done all at once, if convenient, but solubility testing (at each tier that calls for more than one solvent) is designed to be sequential - media, then DMSO, then ethanol – in accordance with the solvent hierarchy (see **Figure 1**). This allows for testing to stop, rather than continue testing with less preferred solvents, if the test chemical dissolves in a more preferred solvent. For example, if a chemical is soluble in medium at a particular tier, testing may stop. Likewise, if a chemical is soluble in DMSO at any tier, testing need not continue with ethanol. However, since the issue of primary importance is testing the solvents and concentrations of test chemical required by any one tier, sequential testing of solvents may be abandoned if the lab can test more efficiently in another way.

### 1. Determination of Solubility

a) Tier 1 begins with testing 20 mg/mL in Routine Culture Medium (see **Table 2**). Approximately 10 mg (10,000 µg) of the test chemical will be weighed into a glass tube and the weight will be documented. A volume of Routine Culture Medium, approximately 0.5 mL, will be added to the vessel so that the concentration is 20,000 µg/ml (20 mg/mL). The solution is mixed as specified in **Section VII.D.2.a.** If complete solubility is achieved in media, then additional solubility procedures are not needed.

b) If the test chemical is insoluble in medium, proceed to Tier 2 by adding enough medium, approximately 4.5 mL, to attempt to dissolve the chemical at 2 mg/mL by using the sequence of mixing procedures specified in **Section VII.D.2.a**. If the test chemical dissolves in medium at 2 mg/mL, no further procedures are necessary. If the test chemical does NOT dissolve, weigh out approximately 100 mg test chemical in a second glass tube and add enough DMSO to make the total volume approximately 0.5 mL (for 200 mg/mL), and attempt to dissolve the chemical as specified in **Section VII.D.2.a**. If the chemical does not dissolve in DMSO, weigh out approximately 100 mg test chemical in another glass tube and add enough ethanol to make the total volume approximately 0.5 mL (for 200 mg/mL) and attempt to dissolve the chemical as specified in **Section VII.D.2.a**. If the chemical is soluble in either solvent, no additional solubility procedures are needed.

c) If the chemical is NOT soluble in media, DMSO, or ethanol at Tier 2, then continue to Tier 3 in **Table 2** by adding enough solvent to increase the volume of the three Tier 2 solutions by 10 and attempt to solubilize again using the sequence of mixing procedures in **Section VII.D.2.a.** If the test chemical dissolves, no additional solubility procedures are necessary. If the test chemical does NOT dissolve, continue with Tier 4 and, if necessary, Tier 5 using DMSO and ethanol. Tier 4 begins by diluting the Tier 3 samples with DMSO or ethanol to bring the total volume to 50 mL. The mixing procedures in **Section VII.D.2.a** are again followed to attempt to solubilize the chemical. Tier 5 is performed, if necessary, by weighing out another two more samples of test chemical at ~10 mg each and adding ~50 mL DMSO or ethanol for a 200 µg/mL solution, and following the mixing procedures in **Section VII.D.2.a**.

   Example: If complete solubility is not achieved at 20,000 µg/mL in Routine Culture Medium at Tier 1 using the mixing procedures specified in **Section VII.D.2.a,** then the procedure continues to Tier 2 by diluting the solution to 5 mL and mixing again as specified in **Section VII.D.2.a.** If the chemical is not soluble in medium, two samples of ~ 100 mg test chemical are weighed to attempt to solubilize in DMSO and ethanol at 200,000 µg/mL (i.e., 200 mg/mL). Solutions are mixed following the sequence of procedures prescribed in **Section VII.D.2.a** in an attempt to dissolve. If solubility is not achieved at Tier 2, then the solutions (media, DMSO, and ethanol) prepared in Tier 2 are diluted by 10 to test 200 µg/mL in media, and 20,000 µg/mL in DMSO and ethanol. This advances the procedure to Tier 3. Solutions are again mixed as prescribed in **Section VII.D.2.a** in an attempt to dissolve. If solubility is not achieved in Tier 3, the procedure continues to Tier 4, and to 5 if necessary (see **Figure 1** and **Table 2**).

**Table 2 Determination of Solubility in Routine Culture Medium, DMSO, or Ethanol**

| TIER | 1 | 2 | 3 | 4 | 5 |
|---|---|---|---|---|---|
| Total Volume Medium | 0.5 mL | 5 mL | 50 mL | | |
| Concentration of Test Chemical (Add ~10 mg to a tube. Add enough medium to equal the first volume. Dilute to subsequent volumes if necessary.) | 20,000 µg/mL (20 mg/mL) | 2,000 µg/mL (2 mg/mL) | 200 µg/mL (0.20 mg/mL) | | |
| Total Volume DMSO/Ethanol | | 0.5 mL | 5 mL | 50 mL | |
| Concentration of Test Chemical (Add ~100 mg to a large tube. Add enough DMSO or ethanol to equal the first volume. Dilute to subsequent volumes if necessary.) | | 200,000 µg/mL (200 mg/mL) | 20,000 µg/mL (20 mg/mL) | 2,000 µg/mL (2 mg/mL) | |
| Total Volume DMSO/Ethanol | | | | | 50 mL |
| Concentration of Test Chemical (Add ~10 mg to a large tube. Add enough DMSO or ethanol to equal 50 mL.) | | | | | 200 µg/mL (0.2 mg/mL) |
| Equivalent Concentration on Cells | 10,000 µg/mL (10 mg/mL) | 1000 µg/mL (1 mg/mL) | 100 µg/mL (0.1 mg/mL) | 10 µg/mL (0.01 mg/mL) | 1 µg/mL (0.001 mg/mL) |

NOTE: The amounts of test chemical weighed and Routine Culture Medium added may be modified from the amounts given above, provided that the targeted concentrations specified for each tier are tested.

## *Figure 1. Solubility Flow Chart*

**TIER 1**

| | |
|---|---|
| STEP 1: | 20 mg/mL test chemical (TC) in 0.5 mL medium:<br>• if TC soluble, then **STOP**.<br>• if TC insoluble, then go to STEP 2. |

**TIER 2**

| | |
|---|---|
| STEP 2: | 2 mg/mL TC in medium – increase volume from STEP 1 by 10 (i.e., to 5 mL)<br>• if TC soluble, then **STOP**.<br>• if TC insoluble, then go to STEP 3. |
| STEP 3: | 200 mg/mL TC in DMSO<br>• if TC soluble, then **STOP**.<br>• if TC insoluble, test at 200 mg/mL in ETOH.<br>  • if TC soluble, then **STOP.**<br>  • If TC insoluble, go to STEP 4. |

**TIER 3**

| | |
|---|---|
| STEP 4: | 0.2 mg/mL TC in medium – increase volume from STEP 2 by 10 (i.e., to 50 mL)<br>• if TC soluble, then **STOP**.<br>• if TC insoluble, test at 20 mg/mL in DMSO – increase volume from STEP 3 by 10 (i.e., to 5 mL).<br>  • if TC soluble, then **STOP.**<br>  • if TC insoluble, test at 20 mg/mL in ETOH – increase volume from STEP 3 by 10 (i.e., to 5 mL).<br>  • if TC soluble, then **STOP.**<br>  • if TC insoluble, then go to STEP 5. |

**TIER 4**

| | |
|---|---|
| STEP 5: | 2 mg/mL TC in DMSO – increase volume from STEP 4 by 10 (i.e., to 50 mL)<br>• if TC soluble, then **STOP.**<br>• if TC insoluble, test at 2 mg/mL in ETOH – increase volume from STEP 4 by 10 (i.e., to 50 mL).<br>  • if TC soluble, then **STOP.**<br>  • if TC insoluble, then go to STEP 6. |

**TIER 5**

| | |
|---|---|
| STEP 6: | 0.2 mg/mL TC in 50 mL DMSO<br>• if TC soluble, then **STOP.**<br>• if TC insoluble, test at 0.2 mg/mL in 50 mL ETOH<br>  • **STOP** |

**2. Mechanical Procedures**

a) The following hierarchy of mixing procedures will be followed to dissolve the test chemical:

1) Add test chemical to solvent as in Tier 1 of **Table 2**.

2) Gently mix. Vortex the tube (1 –2 minutes).

3) If test chemical hasn't dissolved, use sonication for up to 5 minutes.

4) If sonication doesn't work, then warm solution to 37°C for 5 – 60 minutes. This can be performed by warming tubes in a 37°C water bath or in a $CO_2$ incubator at 37°C. The solution may be stirred during warming (stirring in a $CO_2$ incubator will help maintain proper pH).

5) Proceed to Tier 2 (and Tiers 3-5, if necessary of Table 2 and repeat procedures 2-4).

b) The preference of solvent for dissolving test chemicals is medium, DMSO, and then ethanol. Thus, if a test chemical dissolves in more than one solvent at any one solubility-testing tier, then the choice of solvent follows this hierarchy. For example, if, at any tier, a chemical is soluble in medium and DMSO, but not ethanol, the choice of solvent would be medium. If the chemical were insoluble in medium, but soluble in DMSO and ethanol, the choice of solvent would be DMSO.

After the lab has determined the preferred solvent for the test chemical and before proceeding to the cytotoxicity testing, the Study Director will discuss the solvent selection with the Study Management Team (SMT) of the validation study. The SMT will relate what solvent should be used in the assay for each chemical. If the laboratory has attempted all solubility testing without success, then the SMT will provide additional guidance for achieving test chemical solubility. The SMT anticipates that all validation study test chemicals will be tested in the NRU assays.

**E. Preparation of Test Chemicals**

[Note: Preparation under red or yellow light is recommended to preserve chemicals that degrade upon exposure to light.]

**1. Test Chemical in Solution**

a) Allow test chemicals to equilibrate to room temperature before dissolving and diluting.

b) Prepare test chemical immediately prior to use. Test chemical solutions should not be prepared in bulk for use in subsequent tests. The solutions must not be cloudy nor have noticeable precipitate. Each stock dilution should have at least 1-2 mL total volume to ensure adequate solution for the test wells in a single 96-well plate. The SMT may direct the Study Director to store an aliquot (e.g., 1 mL) of the highest 2X

stock solution (e.g., low solubility chemicals) in a freezer (e.g., -70°C) for use in future chemical analyses.

c) For chemicals dissolved in DMSO or ethanol, the final DMSO or ethanol concentration for application to the cells must be 0.5 % (v/v) in the vehicle controls and in all of the eight test concentrations.

d) The stock solution for each test chemical should be prepared at the highest concentration found to be soluble in the solubility test. Thus, the highest test concentration applied to the cells in each range finding experiment is:
   - 0.5 times the highest concentration found to be soluble in the solubility test, if the chemical was soluble in medium, or
   - 1/200 the highest concentration found to be soluble in the solubility test if the chemical was soluble in ethanol or DMSO.

e) The seven lower concentrations in the range finding experiment would then be prepared by successive dilutions that decrease by one log unit each. The following example illustrates the preparation of test chemical in solvent and the dilution of dissolved test chemical in medium before application to NHK cells.

   Example: Preparation of Test Chemical in Solvent Using a Log Dilution Scheme

   If DMSO was determined to be the preferred solvent at Tier 2 of the solubility test (i.e., 200,000 µg/mL), dissolve the chemical in DMSO at 200,000 µg/mL for the chemical stock solution.

   1) Label eight tubes 1 – 8. Add 0.9 mL solvent (e.g., DMSO) to tubes 2 -- 8.

   2) Prepare stock solution of 200,000 µg test chemical/mL solvent in tube # 1.

   3) Add 0.1 mL of 200,000 µg/mL dilution from tube #1 to tube #2 to make a 1:10 dilution in solvent (i.e., 20,000 µg/mL).

   4) Add 0.1 mL of 20,000 µg/mL dilution from tube #2 to tube #3 to make another 1:10 dilution (i.e., 1:100 dilution from stock solution) in solvent (i.e., 2,000 µg/mL)

   5) Continuing making serial 1:10 dilutions in the prepared solvent tubes.

   6) Since each concentration is 200 fold greater than the concentration to be tested, make a 1:100 dilution by diluting 1 part dissolved chemical in each tube with 99 parts of culture medium (e.g., 0.1 mL of test chemical in DMSO + 9.9 mL culture medium) to derive the eight 2X concentrations for application to NHK cells. Each 2X test chemical concentration will then contain 1 % v/v solvent. The NHK cells will have 0.125 mL of culture medium in the wells prior to application of the test chemical. By adding 0.125 mL of the appropriate 2X test chemical concentration to the appropriate wells, the test chemical will be diluted appropriately (e.g., highest concentration in well will be 1,000 µg/mL) in a total of 0.250 mL and the solvent concentration in the wells will be 0.5% v/v.

7) A test article prepared in DMSO or ethanol may precipitate upon transfer into the Routine Culture Medium. The 2X dosing solutions should be evaluated for precipitates and the results will be recorded in the workbook. It will be permissible to test all of the dosing solutions in the dose range finding assay only. Doses containing test article precipitates should be avoided, and will not be used in the ICx determinations for either the range finding experiments or the definitive tests.

Document all test chemical preparations in the Study Workbook.

**2. pH of Test Chemical Solutions**

Measure the pH of the highest concentration of the test chemical in culture medium using pH paper (e.g., pH 0 – 14 to estimate and pH 5 – 10 to determine more precise value). The pH paper should be in contact with the solution for approximately one minute. Document the pH and note the color of the medium for all dilutions. Do not adjust the pH.

**3. Concentrations of Test Chemical**

a) Range Finder Experiment

Test eight concentrations of the test chemical by diluting the stock solution with a constant factor covering a large range. The initial dilution series shall be log dilutions (e.g., 1:10, 1:100, 1:1000, etc.).

The data from any well that has precipitate will be excluded from any calculations.

b) Main Experiment

[Note: After the range finding assay is completed, the concentration-response experiment shall be performed <u>three times on three different days for each chemical (i.e., one plate per day per chemical)</u>]

Depending on the slope of the concentration-response curve estimated from the range finder, the dilution/progression factor in the concentration series of the main experiment should be smaller ($\sqrt[6]{10} = 1.47$). Cover the relevant concentration range (≥10 % and ≤ 90 % effect) preferably with three points of a graded effect, but with a minimum of two points, one on each side of the estimated $IC_{50}$ value, avoiding too many <u>non-cytotoxic</u> and/or <u>100 %-cytotoxic</u> concentrations. Experiments revealing less than one cytotoxic concentration on each side of the $IC_{50}$ value shall be repeated, where possible, with a smaller dilution factor. Each experiment should have at least one cytotoxicity value ≥ 10.0 % and ≤ 50.0 % viability and at least one cytotoxicity value > 50.0 % and ≤ 90.0 % viability. In addition, the dilution scheme shall be adjusted in subsequent replicate assays (i.e., definitive assays), if necessary, to increase the number of points on both sides of the $IC_{50}$ in the 10-90% response range. (Taking into account pipetting errors, a progression factor of 1.21 is regarded the smallest factor achievable.)

Determine which test chemical concentration is closest to the $IC_{50}$ value (e.g., 50 % cytotoxicity). Use that value as a central concentration and adjust dilutions higher and lower in equal steps for the definitive assay.

Maximum Doses to be Tested in the Main Experiments

If minimal or no cytotoxicity was measured in the dose range finding assay, a maximum dose for the main experiments will be established as follows:

- For test chemicals prepared in Routine Culture Medium, the highest test article concentration that may be applied to the cells in the main experiments will be either 100 mg/mL, or the maximum soluble dose. Test chemical will be weighed into a glass tube and the weight will be documented. A volume of Routine Culture Medium will be added to the vessel so that the concentration is 200,000 µg/mL (200 mg/mL). The solution is mixed as specified in **Section VII.D.2.a**. If complete solubility is achieved in medium, then 7 additional serial stock dosing solutions may be prepared from the 200 mg/mL 2X stock. If the test chemical is insoluble in medium at 200 mg/ml, proceed by adding medium, in small incremental amounts, to attempt to dissolve the chemical by using the sequence of mixing procedures specified in **Section VII.D.2.a**. The highest soluble stock solution will be used to prepare the 7 additional serial stock dosing solutions.

- For test chemicals prepared in either DMSO or ethanol, the highest test article concentration that may be applied to the cells in the main experiments will be either 2.5 mg/mL, or less, depending upon the maximum solubility in solvent. Test chemical will be weighed into a glass tube and the weight will be documented. A volume of the appropriate solvent (determined from the original solubility test) will be added to the vessel so that the concentration is 500,000 µg/mL (500 mg/mL). The solution is mixed as specified in **Section VII.D.2.a**. If complete solubility is achieved in the solvent, then 7 additional serial stock dosing solutions may be prepared from the 500 mg/mL 200X stock. If the test chemical is insoluble in solvent at 500 mg/ml, proceed by adding solvent, in small incremental amounts, to attempt to dissolve the chemical by using the sequence of mixing procedures specified in **Section VII.D.2.a**. The highest soluble stock solution will be used to prepare the 7 additional serial stock dosing solutions.

c) Test Chemical Dilutions

The dosing factor of 3.16 (= $\sqrt[2]{10}$) divides a log into two equidistant steps, a factor of 2.15 (= $\sqrt[3]{10}$) divides a decade into three steps. The factor of 1.47 (= $\sqrt[6]{10}$) divides a log into six equidistant steps, and the factor of 1.21 (= $\sqrt[12]{10}$) divides the log into 12 steps.

EXAMPLE:

| | | | | | | | | | | | | |
|---|---|---|---|---|---|---|---|---|---|---|---|---|
| 10 | | | | | | 31.6 | | | | | | 100 |
| 10 | | | | 21.5 | | | | 46.4 | | | | 100 |
| 10 | | 14.7 | | 21.5 | | 31.6 | | 46.4 | | 68.1 | | 100 |
| 10 | 12.1 | 14.7 | 17.8 | 21.5 | 26.1 | 31.6 | 38.3 | 46.4 | 56.2 | 68.1 | 82.5 | 100 |

The technical production of decimal geometric concentration series is simple. An example is given for factor 1.47:

*Dilute 1 volume of the highest concentration by adding 0.47 volumes of diluent. After equilibration, dilute 1 volume of this solution by adding 0.47 volumes of diluent...(etc.).*

## F. Test Procedure

### 1. 96-Well Plate Configuration

The NHK NRU assay for test chemicals will use the 96-well plate configuration shown in Figure 2.

***Figure 2. 96-Well Plate Configuration for Positive Control and Test Chemical Assays***

| | 1 | 2 | 3 | 4 | 5 | 6 | 7 | 8 | 9 | 10 | 11 | 12 |
|---|---|---|---|---|---|---|---|---|---|---|---|---|
| A | VCb | VCb | $C_1$b | $C_2$b | $C_3$b | $C_4$b | $C_5$b | $C_6$b | $C_7$b | $C_8$b | VCb | VCb |
| B | VCb | VC | $C_1$ | $C_2$ | $C_3$ | $C_4$ | $C_5$ | $C_6$ | $C_7$ | $C_8$ | VC | VCb |
| C | VCb | VC | $C_1$ | $C_2$ | $C_3$ | $C_4$ | $C_5$ | $C_6$ | $C_7$ | $C_8$ | VC | VCb |
| D | VCb | VC | $C_1$ | $C_2$ | $C_3$ | $C_4$ | $C_5$ | $C_6$ | $C_7$ | $C_8$ | VC | VCb |
| E | VCb | VC | $C_1$ | $C_2$ | $C_3$ | $C_4$ | $C_5$ | $C_6$ | $C_7$ | $C_8$ | VC | VCb |
| F | VCb | VC | $C_1$ | $C_2$ | $C_3$ | $C_4$ | $C_5$ | $C_6$ | $C_7$ | $C_8$ | VC | VCb |
| G | VCb | VC | $C_1$ | $C_2$ | $C_3$ | $C_4$ | $C_5$ | $C_6$ | $C_7$ | $C_8$ | VC | VCb |
| H | VCb | VCb | $C_1$b | $C_2$b | $C_3$b | $C_4$b | $C_5$b | $C_6$b | $C_7$b | $C_8$b | VCb | VCb |

VC = untreated VEHICLE CONTROL (mean viability set to 100 %)
$C_1 – C_8$ = Test Chemicals or Positive Control (SLS) at eight concentrations (C1 = highest, C8 = lowest)
b = BLANKS (contain **no** cells)
VCb = VEHICLE CONTROL BLANK

### 2. Application of Test Chemical

a) Two optional methods for rapidly applying the 2X dosing solutions onto the 96-well plates may be utilized.

1) The first method is to add each of the 2X dosing solutions into labeled, sterile reservoirs (e.g., Corning/Costar model 4870 sterile polystyrene 50 mL reagent reservoirs or Corning/Transtar model 4878 disposable reservoir liners, 8-channel; or other multichannel reservoirs).

2) The second method utilizes a "dummy" plate (i.e., an empty sterile 96-well plate) prepared to hold the dosing solutions immediately prior to treatment of the test plate (with cells). The test chemical and control dosing solutions should be dispensed into the dummy plate in the same pattern/order as will be applied to the plate containing cells. More volume than needed for the test plate (i.e. greater than 125 µl/well) should be in the wells of the dummy plate.

At the time of treatment initiation, a multi-channel micropipettor is used to transfer the 2X dosing solutions, from the reservoirs or dummy plate, to the appropriate wells on the treatment plate (as described in step c. below). These methods will ensure that the dosing solutions can be transferred rapidly to the appropriate wells of the test plate to initiate treatment times and to minimize the range of treatment initiation times across a large number of treatment plates, and to prevent "out of order" dosing. Do not use a multichannel repeater pipette for dispensing test chemical to the plates.

b) After 48 - 72 h (i.e., after cells attain 20+ % confluency [see Section VII.C.4(h)]) incubation of the cells, add 125 µl of the appropriate concentration of test chemical, the PC, or the VC (see Figure 2 for the plate configuration) directly to the test wells. Do not remove Routine Culture Medium for re-feeding the cells. The dosing solutions will be rapidly transferred from the 8-channel reservoir (or dummy plate) to the test plate using a single delivery multi-channel pipettor. For example, the VC may be transferred first (into columns 1, 2, 11, and 12), followed by the test article dosing solutions from lowest to highest dose, so that the same pipette tips on the multi-channel pipettor can be used for the whole plate. [The Vehicle Control blank (VCb) wells (column 1, column 12, wells A2, A11, H2, H11) will receive the Vehicle Control dosing solutions (which should include any solvents used). Blanks for wells A3 – A10 and H3 – H10 shall receive the appropriate test chemical solution for each concentration (e.g., wells A3 and H3 receive $C_1$ solution). The test chemical blanks in rows A and H will be used for their respective test chemical concentrations.] Incubate cells for 48 h ± 0.5 h (37ºC ± 1ºC, 90 % ± 5 % humidity, and 5.0 % ± 1 % $CO_2$/air).

c) **Positive Control**: For each set of test chemical plates used in an assay, a separate plate of positive control concentrations will be set up following the concentration range established in the development of the positive control database in Phase I of the Validation Study. If multiple sets of test chemical plates are set up, then clearly designate the positive control plates for each set; each set will be an individual entity. The mean $IC_{50}$ ± two and a half standard deviations (SD) for the SLS acceptable tests from Phases Ia and Ib (after the removal of outliers) are the values that will be used as an acceptance criterion for test sensitivity for the NHK NRU assay. This plate will follow the same schedule and procedures as used for the test chemical plates (including appropriate chemical concentrations in the appropriate wells – see sections VII.F.1 and F.2)..

### 3. Microscopic Evaluation

After at least 46 h treatment, examine each plate under a phase contrast microscope to identify systematic cell seeding errors and growth characteristics of control and treated cells. Record any changes in morphology of the cells due to the cytotoxic effects of the test chemical, but do not use these records for any quantitative measure of cytotoxicity. Undesirable growth characteristics of control cells may indicate experimental error and

may be cause for rejection of the assay. Use the following Visual Observations Codes in the description of cell culture conditions.

**Visual Observations Codes**

| Note Code | Note Text |
|---|---|
| | |
| 1 | Normal Cell Morphology |
| 2 | Low Level of Cell Toxicity |
| 3 | Moderate Level of Cell Toxicity |
| 4 | High level of Cell Toxicity |
| 1P | Normal Cell Morphology with Precipitate |
| 2P | Low Level of Cell Toxicity with Precipitate |
| 3P | Moderate Level of Cell Toxicity with Precipitate |
| 4P | High level of Cell Toxicity with Precipitate |
| 5P | Unable to View Cells Due to Precipitate |

**4. Measurement of NRU**

a) Carefully remove (i.e., "dump") the Routine Culture Medium (with test chemical) and rinse the cells very carefully with 250 µL pre-warmed D-PBS. Remove the rinsing solution by dumping and remove excess by gently blotting on sterile paper towels. Add 250 µL NR medium (to all wells including the blanks) and incubate (37ºC ± 1ºC, 90 % ± 5 % humidity, and 5.0 % ± 1 % $CO_2$/air) for 3±0.1 h. Observe the cells briefly during the NR incubation (e.g., between 2 and 3 h – Study Director's discretion) for NR crystal formation. Record observations in the Study Workbook. Study Director can decide to reject the experiment if excessive NR crystallization has occurred.

b) After incubation, remove the NR medium, and carefully rinse cells with 250 µL pre-warmed D-PBS.

c) Decant and blot D-PBS from the plate. (Optionally: centrifuge the reversed plate.)

d) Add exactly 100 µL NR Desorb (ETOH/acetic acid) solution to all wells, including blanks.

e) Shake microtiter plate rapidly on a microtiter plate shaker for 20 – 45 min to extract NR from the cells and form a homogeneous solution. Plates should be protected from light by using a cover during shaking.

f) Plates should be still for at least five minutes after removal from the plate shaker (or orbital mixer). Observe the wells for bubbles. Measure the absorption (within 60 minutes of adding NR Desorb solution) of the resulting colored solution at 540 nm ± 10 nm in a microtiter plate reader (spectrophotometer), using the blanks as a reference. [Phases Ia and Ib data show the mean OD value for the plate blanks to be 0.055 ± 0.035 for NHK cells (± 2.5 standard deviations; data from 3 labs; N = 156). Use this range as a **guide** for assessment of the blank values.] Save raw data in the Excel format as provided by the SMT.

**5. Quality Check of Assay**

a) Test Acceptance Criteria

1) A test meets acceptance criteria, if the $IC_{50}$ for SLS is within two and a half (2.5) standard deviations of the historical mean established by the Test Facility (as per **VII.F.2.c**).

2) A test meets acceptance criteria if the left and the right mean of the VCs do not differ by more than 15.0 % from the mean of all VCs.

3) A test meets acceptance criteria if:
   - at least one calculated cytotoxicity value ≥ 10.0 % and ≤ 50.0 % viability and
   - at least one calculated cytotoxicity value > 50.0 % and ≤ 90.0 % viability.

4) A test meets acceptance criteria if the $r^2$ (coefficient of determination) value calculated for the Hill model fit (i.e., from PRISM® software) is ≥ 0.90. A test does not meet acceptance criteria if the $r^2$ value is < 0.80. If the $r^2$ value is ≥ 0.80 and < 0.90 ("gray zone"), then the SMT will evaluate the model fit and make the determination of whether or not the test meets the acceptance criteria and relate the information to the Study Director.

[Note: All acceptance criteria must be met for an assay to be considered acceptable.]

[A corrected mean $OD_{540 \pm 10nm}$ of 0.205 - 1.645 for the VCs is a target range but will not be a test acceptance criterion. Range determined from Phase Ib VC OD values from 3 laboratories (mean ± 2.5 standard deviations, N = 69).]

b) Checks for Systematic Cell Seeding Errors

To check for systematic cell seeding errors, untreated VCs are placed both at the left side (row 2) and the right side (row 11 for the test plates) of the 96-well plate. Aberrations in the cell monolayer for the VCs may reflect a volatile and toxic test article present in the assay.

Checks for cell seeding errors may also be performed by examining each plate under a phase contrast microscope to assure that cell quantity is consistent.

c) Quality Check of Concentration-Response

The $IC_{50}$ derived from the concentration-response of the test chemicals should be backed by preferably three responses ≥ 10 and ≤ 90 % inhibition of NRU and at least two responses, one on either side of the $IC_{50}$ value (see sections **VII.E.3.b and VII.F.5.a.3**). If this is not the case, and the concentration progression factor can be easily reduced, reject the experiment and repeat it with a smaller progression factor. In addition, the dilution scheme shall be adjusted in subsequent replicate assays, if necessary, to increase the number of points on both sides of the $IC_{50}$ in the 10-90% response range. Numerical scoring of the cells (see **VII.F.3**) should be determined and documented in the Study Workbook.

### G. Data Analysis

A calculation of cell viability expressed as NRU is made for each concentration of the test chemical by using the mean NRU of the six replicate values (minimum of four acceptable replicates wells) per test concentration. The Study Director will use good biological/scientific judgment for determining "unusable" wells that will be excluded from the statistical analysis. This value is compared with the mean NRU of all VC values (provided VC values have met the VC acceptance criteria). Relative cell viability is then expressed as percent of untreated VC. If achievable, the eight concentrations of each chemical tested will span the range of no effect up to total inhibition of cell viability. Data from the microtiter plate reader shall be transferred to the Excel® spreadsheet (template with macros provided by the SMT) that will automatically determine cell viability and perform statistical analyses (including determination of outliers).

The concentration of a test chemical reflecting a 20 %, 50 %, and 80 % inhibition of cell viability (i.e., the $IC_{20}$, $IC_{50}$, and $IC_{80}$) is determined from the concentration-response by applying a Hill function to the concentration-response data. Statistical software (e.g., GraphPad PRISM® 3.0) specified by the SMT shall be used to calculate $IC_{20}$, $IC_{50}$, and $IC_{80}$ values (and the associated confidence limits) for each test chemical. In addition, the SMT shall provide guidelines for calculating ICx values and confidence limits. The Testing Facility shall report data using at least three (3) significant figures and shall forward the results from each assay to the SMT/biostatistician through the designated contacts in electronic format and hard copy upon completion of testing. The SMT will be directly responsible for the statistical analyses of the Validation Study data.

## VIII. REFERENCES

Clonetics Normal Human Keratinocyte Systems Instructions for Use, AA-1000-4-Rev.03/00. (http://www.clonetics.com).

Hackenberg, U. and H. Bartling. 1959. Messen und Rechnen im pharmakologischen Laboratorium mit einem speziellen Zahlensystem (WL24-System). Arch. Exp. Pathol. Pharmakol. 235: 437-463.

Triglia, D., P.T. Wegener, J. Harbell, K. Wallace, D. Matheson, and C. Shopsis. 1989. Interlaboratory validation study of the keratinocyte neutral red bioassay from Clonetics Corporation. In *Alternative Methods in Toxicology*, Volume 7. A.M. Goldberg, ed., pp. 357-365. Mary Ann Liebert, Inc., New York.

## IX. APPROVAL

_____ _____
**SPONSOR REPRESENTATIVE** **DATE**

**(Print or type name)**

_____ _____
**Testing Facility STUDY DIRECTOR** **DATE**
**(Print or type name)**

# Appendix D

**D1 SAS Code for ANOVA and Contrasts ..... D-3**

**D2 SAS Code for Regression Comparisons ..... D-7**

***[This Page Intentionally Left Blank]***

# Appendix D1

## SAS Code for ANOVA and Contrasts

***[This Page Intentionally Left Blank]***

```
 options nodate nonumber;
libname lib "S:\NIEHS\EXP Studies\BasicResearch\Haseman\Cytotoxicity
Validation\Post Phase III Analysis and Data\data sets";


proc sort data=lib.anovadata; by chemical cell lab;

ods trace on;
ods listing close;
ods output OverallANOVA=temp;
ods output Contrasts=temp1;
proc glm data=lib.anovadata;
class lab;
by chemical cell;
model log_ic50=lab;
contrast 'Comparing IIVS to FRAME and ECBC'
lab -.5 -.5 1;
contrast 'Comparing ECBC to FRAME and IIVS'
lab 1 -.5 -.5;
contrast 'Comparing FRAME to ECBC and IIVS'
lab -.5 1 -.5;

run;ods listing;
*proc print data=temp1;run;

data lib.contrast_results; set temp1;
keep chemical cell Source ProbF;
run;

*proc print data=lib.contrast_results;run;

data lib.anova_results; set temp;
if Source="Error" then delete;
if Source="Corrected Total" then delete;
keep chemical cell ProbF;
run;

proc sort data=lib.anova_results; by chemical cell;

/*proc print data=lib.anova_results;
var chemical cell ProbF;
run;*/

data temp;
set lib.anova_results;
keep chemical cell ProbF;
run;
proc export data=temp
   outfile='S:\NIEHS\EXP Studies\BasicResearch\Haseman\Cytotoxicity
Validation\Post Phase III Analysis and Data\data sets\Anova Results.txt'
   dbms=TAB;

run;
```

***[This Page Intentionally Left Blank]***

# Appendix D2

## SAS Code for Regression Comparisons

***[This Page Intentionally Left Blank]***

```
dm 'output; clear';
dm 'log; clear';
*********************************************************************
*
*filename: task3.sas
*creation date: 08/02/06
*study:niceatm
*investigator:
*purpose: perform the individual lab regressions (tasks 1-4)
* note: 3 models are fit:
* (a) full model
* (b) reduced model with separate intercepts + common slope
* (c) separate intercepts + separate slopes model
*authors:mike riggs
*input data medium: sas data sets
*
*********************************************************************;
*
*
*compare rc to niceatm regressions, by cell type
*note: the input data set anal3 was created by taking the 47 3t3
*chemicals and the 51 nhk chemicals and computing their
*means by cell line
*
*
*
*********************************************************************;
proc mixed data=anal3 maxiter=200;
 by celline;
 class est_type;
 model log_ld50=est_type logic50_lab est_type*logic50_lab/outpredm=predat;
 title1 'ancova model (estimation type = trt) log-scale lab regressions, by
cell line';
 title2 '(test for slope differences)';
run;
quit;

****compute the full-model rsquare from the model residuals and predictions
***;
****note: proc mixed does not compute rsq, so you need to do it
yourself***;

data pred3t3 prednhk;
 set predat;
 if celline='3t3' then output pred3t3;
else output prednhk;
run;

proc summary data=pred3t3 nway;
 var log_ld50;
 output out=sumdat
mean=_mean_;
run;

data pred3t3;
 if _n_=1 then set sumdat;
 set pred3t3;
```

```
run;

data comp;
 set pred3t3 end=eof;
 sst+((log_ld50-_mean_)**2);
 sse+(resid**2);
 n=_n_ ;
 if eof then output;
run;

data comp;
 set comp;
 rsq=(sst-sse)/sst;
 label _mean_='response*mean'
sst='total sum*of squares'
sse='error sum*of squares'
rsq='r-squared';
run;

proc print data=comp split='*';
 var n _mean_ sst sse rsq;
 format rsq 5.3;
title1 'full ancova model r-square for 3t3 cell line (task 3)';
run;


proc summary data=prednhk nway;
 var log_ld50;
 output out=sumdat
mean=_mean_;
run;

data prednhk;
 if _n_=1 then set sumdat;
 set prednhk;
run;

data comp;
 set prednhk end=eof;
 sst+((log_ld50-_mean_)**2);
 sse+(resid**2);
 n=_n_ ;
 if eof then output;
run;

data comp;
 set comp;
 rsq=(sst-sse)/sst;
 label _mean_='response*mean'
sst='total sum*of squares'
sse='error sum*of squares'
rsq='r-squared';
run;

proc print data=comp split='*';
 var n _mean_ sst sse rsq;
 format rsq 5.3;
```

```
title1 'full ancova model r-square for nhk cell line (task 3)';
run;


proc mixed data=anal3 maxiter=200;
 by celline;
 class est_type;
 model log_ld50=est_type est_type*logic50_lab/noint solution cl alpha=0.05;
 * the following contrast is the simultaneous test of equal intercepts and
slopes ***;
 contrast 'lab vs. rc' est_type -1 1,
 est_type*logic50_lab -1 1;
 title1 'ancova model (trt=estimation type) log-scale lab regressions, by
cell line';
 title2 '(separate slope estimates)';
run;
quit;

proc mixed data=anal3 maxiter=200;
 by celline;
 model log_ld50=logic50_lab/solution cl alpha=0.05;
 title1 'ancova model (estimation type = trt) log-scale lab regressions, by
cell line';
 title2 '(estimate homogeneous slope with single intercept)';
run;
quit;
```

***[This Page Intentionally Left Blank]***

# Appendix E

## Neutral Red Dye Experiments

**E1 Institute for *In Vitro* Sciences (IIVS) Assessment of Protocol Variables in the NICEATM/ECVAM Evaluation of Cytotoxicity Assays..... E-5**

**E2 Neutral Red (NR) Dye Experiments – 3T3 Cells – IIVS ..... E-13**

**E3 Neutral Red (NR) Dye Experiments – NHK Cells – IIVS..... E-19**

**E4 Neutral Red (NR) Dye Experiments – 3T3 Cells – ECBC ..... E-25**

***[This Page Intentionally Left Blank]***

# APPENDIX E
# Neutral Red Dye Experiments

**Appendix E1:** Institute for *In Vitro* Sciences (IIVS) Assessment of Protocol Variables in the NICEATM/ECVAM Evaluation of Cytotoxicity Assays

IIVS performed experiments using the 3T3 cells and the NRU test methods before the NICEATM/ECVAM validation study was initiated. The laboratory examined: optimal solvent concentrations (DMSO and ETOH), cell seeding densities, doubling times, and exposure duration of a test chemical (24, 48, and 72-hour exposures). Data are presented in the appendix.

**Appendix E2:** Neutral Red (NR) Dye Experiments – 3T3 Cells

IIVS performed three sets of experiments to compare the optical density (OD) readings obtained in an NRU assay using various concentrations of NR dye and different incubation periods.

- Experiment 1: NR Stain Time Course in 3T3 Cells; NRU incubation times: 0.25, 0.50, 1.0, 2.0, and 3.0 hour.
- Experiment 2: Neutral Red Stain Prepared in DMEM/5%NCS; Test of NR Preparation 1 Day Prior to Use; Tested in 90-100% Confluent 3T3 Cultures
- Experiment 3: Neutral Red Stain Prepared in DMEM/5%NCS; Filtered Immediately before Use; Tested in 90-100% Confluent 3T3 Cultures

**Appendix E3:** Neutral Red (NR) Dye Experiments – NHK Cells

IIVS performed three sets of experiments to compare the optical density (OD) readings obtained in an NRU assay using various concentrations of NR dye and different incubation periods.

- Experiment 1: NR Stain Time Course in NHK Cells; NRU incubation times: 0.25, 0.50, 1.0, 2.0, and 3.0 hour.
- Experiment 2: Neutral Red Stain Prepared in KGM; Test of NR Preparation 1 Day Prior to Use; Tested in 90-100% Confluent NHK Cultures
- Experiment 3: Neutral Red Stain Prepared in KGM; Filtered Immediately before Use; Tested in 90-100% Confluent NHK Cultures

**Appendix E4:** Neutral Red (NR) Dye Experiments – Concentration vs Time – 3T3 Cells

ECBC performed experiments using the 3T3 cells and the NRU test methods.

- *in vitro* cytotoxicity NRU tests (3T3 cells) using SLS (range = 100 μg/mL to 6.7 μg/mL)
- NR dye mixed with DMEM culture medium with 10% NCS; final concentrations = 25 μg/mL and 50 μg/mL
- Tests performed with two NRU incubation times: 1 hour and 3 hours

| μg NR dye/mL | NRU Incubation Time (hours) | Mean Vehicle Control $OD_{540}$ Value |
|---|---|---|
| 25 | 1 | 0.255 |
| 25 | 3 | 0.508 |
| 50 | 1 | 0.330 |
| 50 | 3 | 0.457 |

# Appendix E1

## Institute for *In Vitro* Sciences (IIVS) Assessment of Protocol Variables in the NICEATM/ECVAM Evaluation of Cytotoxicity Assays

***[This Page Intentionally Left Blank]***

# INSTITUTE FOR *IN VITRO* SCIENCES (IIVS) ASSESSMENT OF PROTOCOL VARIABLES IN THE NTP EVALUATION OF CYTOTOXICITY ASSAYS APRIL 2002

## BALB/c 3T3 Cells

### I. What is the acceptable solvent concentration?

Two solvents, DMSO and ETOH, were assayed in the 3T3 assay to determine acceptable concentrations. Multiple exposure times were assessed since the final assay exposure time was not yet established. Various cell seeding concentrations were tested since these experiments were run concurrently with others which used to determine optimal seeding density.

**Table 1.**

| **ETOH** | | | | | | | | | | |
|---|---|---|---|---|---|---|---|---|---|---|
| | **Date** | **2%** | **1%** | **0.50%** | | **Seeding Density** | | | | |
| 48hour | 2/26/02 | 58% | 72% | 100% | | $9X10^3$ cells/ml | | | | |
| | 2/26/02 | 49% | 73% | 102% | | $4.5X10^3$ cells/ml | | | | |
| | | | | | | | | | | |
| | | | | | | | | | | |
| 72hour | 2/26/02 | 67% | 75% | 105% | | $9X10^3$ cells/ml | | | | |
| | 2/26/02 | 68% | 82% | 108% | | $4.5X10^3$ cells/ml | | | | |

| **DMSO** | | | | | | | | | | |
|---|---|---|---|---|---|---|---|---|---|---|
| | **Date** | **2%** | **1%** | **0.5%** | **0.4%** | **0.3%** | **0.2%** | **0.1%** | **Seeding Density** | |
| 24hour | 3/19/02 | | 76% | 91% | 92% | 99% | 100% | 101.6% | $2X10^4$ cells/ml | |
| | | | | | | | | | | |
| 48hour | 2/26/02 | 25% | 54% | 83% | | | | | $9X10^3$ cells/ml | |
| | 2/26/02 | 27% | 56% | 78% | | | | | $4.5X10^3$ cells/ml | |
| | 3/19/02 | | 116% | 123% | 122% | 120% | 117% | 108.8% | $1X10^4$ cells/ml | |
| | | | | | | | | | | |
| 72hour | 2/26/02 | 20% | 52% | 86% | | | | | $9X10^3$ cells/ml | |
| | 2/26/02 | 19% | 56% | 93% | | | | | $4.5X10^3$ cells/ml | |
| | 3/19/02 | | 58% | 89% | 102% | 102% | 112% | 110.1% | $5X10^3$ cells/ml | |
| | | | | | | | | | | |

We concluded from these experiments that 0.5% ETOH was the optimal ETOH concentration (little to no toxicity), and that 0.5% was probably acceptable for DMSO as a trade-off between slight toxicity and ability to test chemicals to higher does levels.

From about the middle of March 2002 on, we used 0.5% in all of our experiments where DMSO was called for as a solvent. This gave us a number of opportunities to further determine the toxicity of DMSO by comparing the solvent control wells with the media control wells in the same experiment.

**Table 2.**

| **DMSO** | | | |
|---|---|---|---|
| Date & Exposure Time | OD Assay Medium Wells | OD Solvent Wells | % Survival in Solvent |
| 24hour 3/19/02 | 0.502 | 0.474 | 94.5% |
| | 0.441 | 0.394 | 89.4% |
| | | | |
| 48hour 3/19/02 | 0.587 | 0.536 | 91.4% |
| | 0.582 | 0.545 | 93.6% |
| | | | |
| 72hour 3/19/02 | 0.687 | 0.601 | 87.6% |
| | 0.666 | 0.588 | 88.3% |

The average survival in 0.5% DMSO from **Table 2** was 90.8%.

## II. Doubling Time Experiments

We ran a series of experiments designed primarily to determine the appropriate original seeding density for 24, 48, and 72 hour exposure times. We judged our results on visual observations of the cells at the conclusion of the experiment (control cells should be just confluent at 24, 48, or 72 hours), and on the shape of the growth curve.

**Figure 1.**

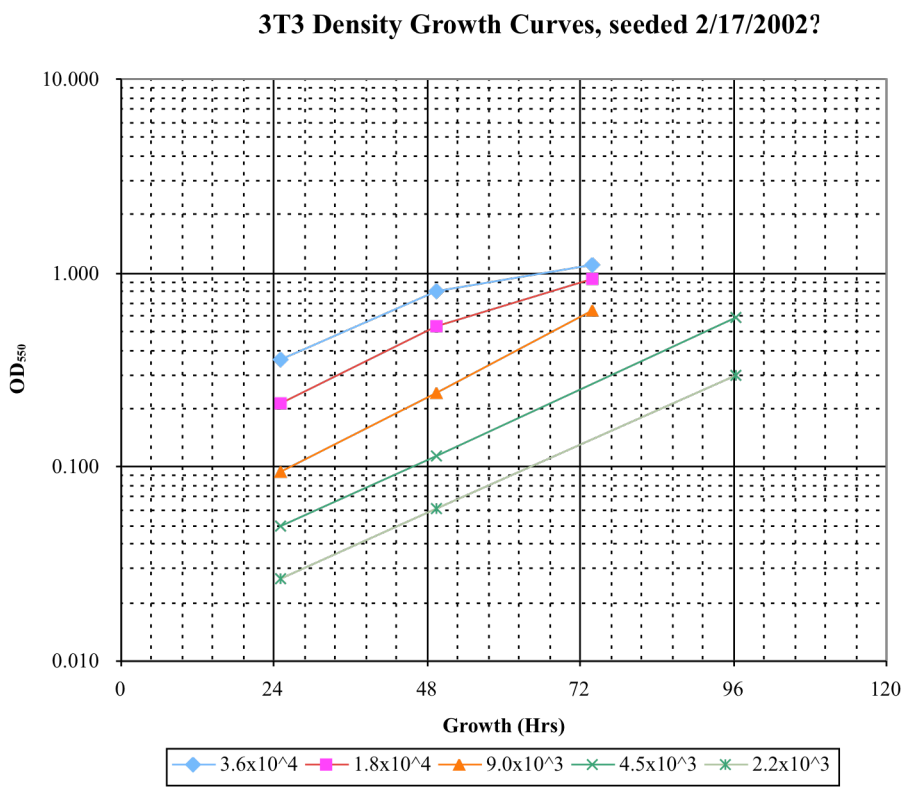

**Figure 2.**

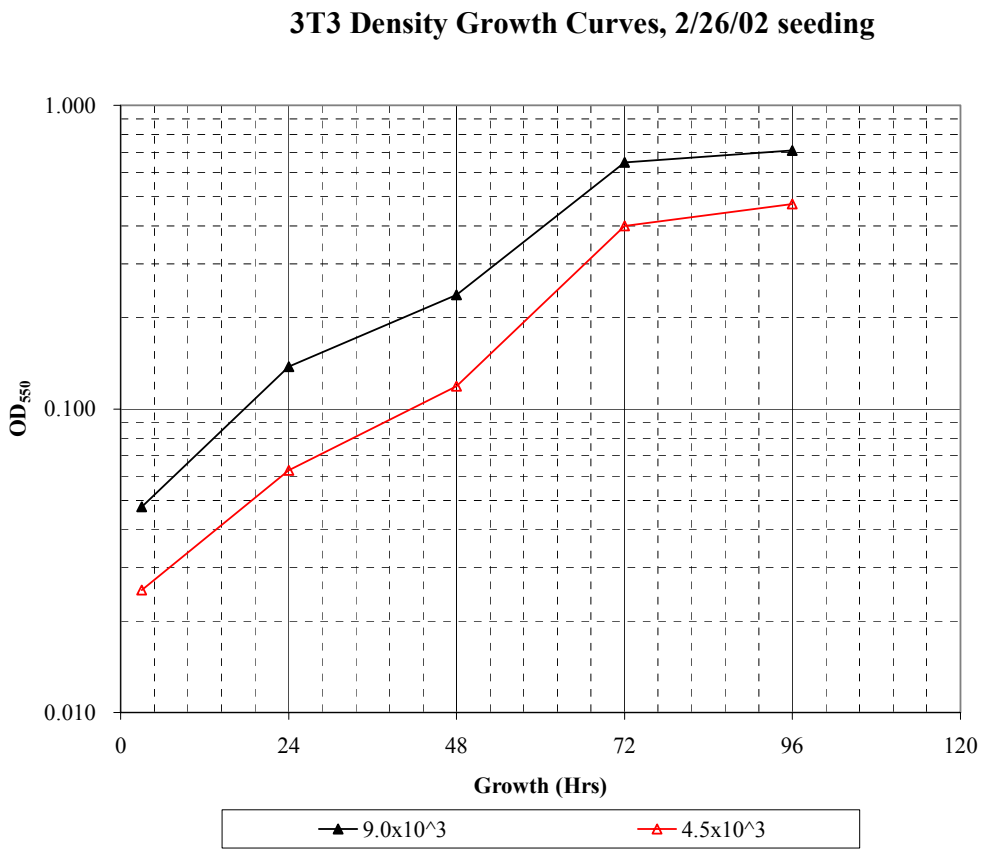


We have concluded from these growth curves that our 3T3 cells have a doubling time of about 19 hours and that cell concentration of: $1x10^4$ cells/ml (24hour); $5x10^3$ cells/ml (48hour); and $2.5x10^3$ (72hour) are acceptable.

## III. Exposure Duration

The exposure question was first raised by Richard Clothier who indicated that a paper by Riddell, et al. (1986) showed a number of chemicals whose toxicity changed greatly between a 24 hour and a 72 hour exposure (for 25/50 materials there was little change and for 25/50 materials there was a change). We examined the paper and chose to investigate six chemicals that showed some of the largest differences between 24 hour and 72 hour.

Our initial studies gave similar results to those of Riddell et al. (1986). However we felt that the cell number for the longer exposures was not optimal, and we conducted additional studies to determine a standard seeding density for each exposure period. Using this methodology we looked at the 6 materials in a standardized fashion at 24, 48 and 72 hours. Our results are shown in **Fig. 3**.

**Figure 3.**

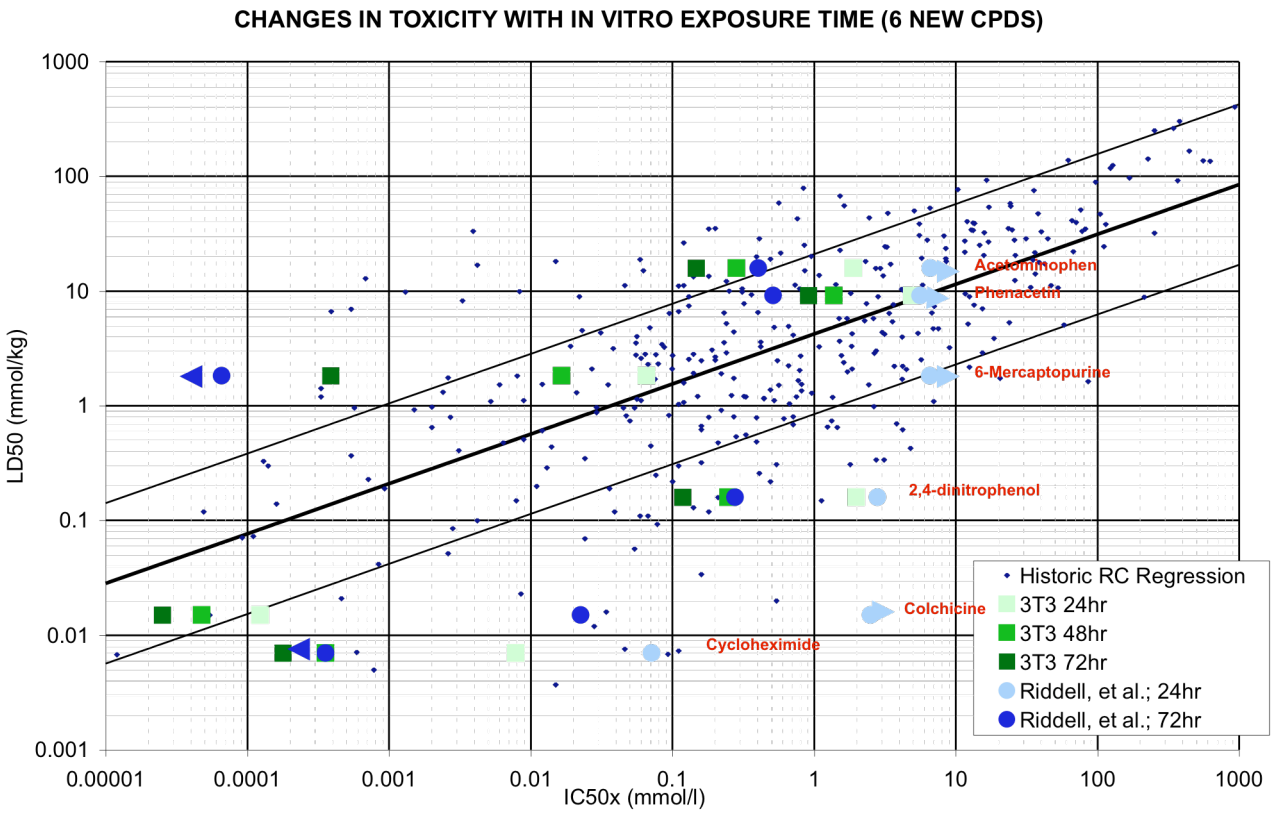


In this figure the historic Halle et al. (1992) data are shown as small blue dots and the regression line as a dark black line. To add perspective we have included the Riddell, et al. (1986) data as a light blue diamond (24hour) or a dark blue diamond (72hour). Arrows emerging from certain points indicate that the value is less than or greater than that point. Our values are graphed in increasing shades of green from light (24hour) to dark (72hour). All green values are averages of at least two separate experiments. It appears that our data are somewhat different than Riddell, et al. (1986), i.e., most differences are not as great as originally seen. Nonetheless the values, as expected, do become more toxic with increased exposure time. We feel that 48 hours is probably the optimal time for these data if the Halle regression is considered some type of a standard.

Next we asked whether a 48 hour exposure time would affect our earlier results with the 11 chemicals presented in the *Guidance Document* (ICCVAM 2001b). If these numbers were changed significantly, this might cause us to make significant modification to our guidance.

To assess the effect of increasing exposure time on the 11 chemicals, we tested them with exposure times of 24, 48 and 72 hours as shown in **Fig. 4**.

**Figure 4.**

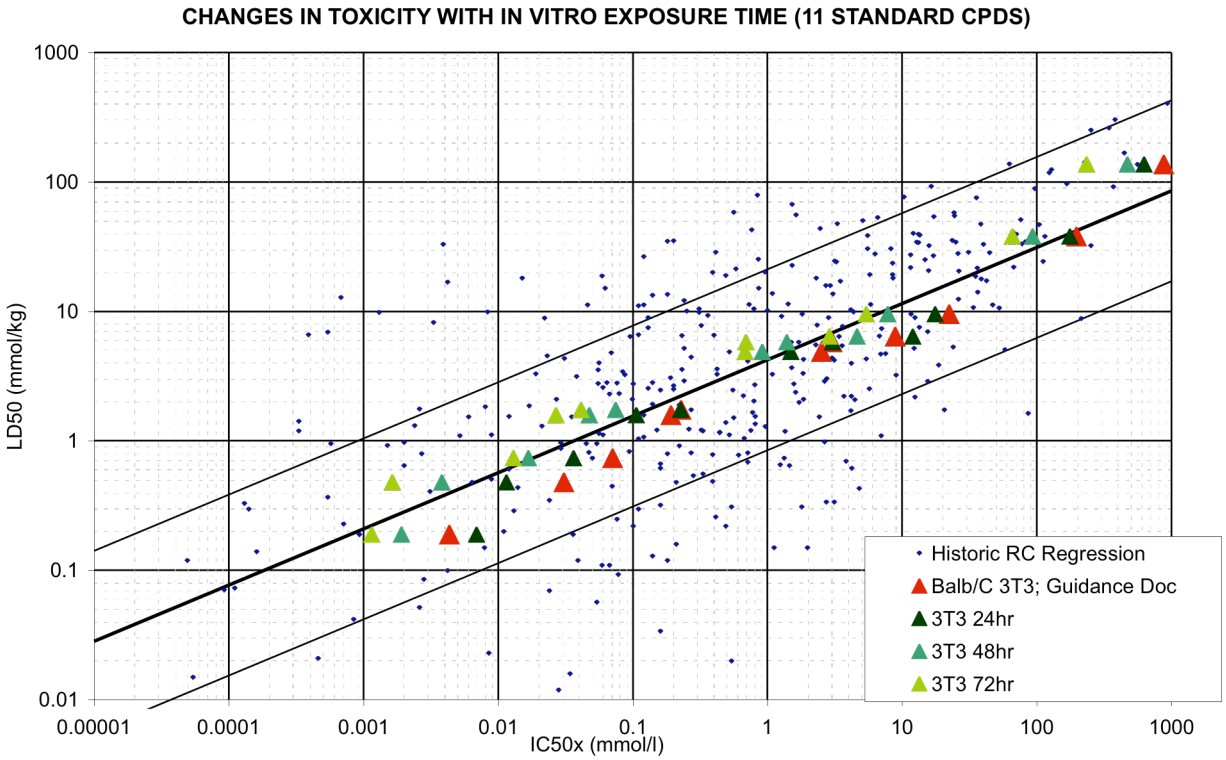


The data shown on the graph are averages of duplicate experiments. It can be seen that although each of the chemicals becomes more toxic with increased exposure, all points are still within the 0.5 log range of the regression line. It again appears that 48 hour exposure fits the regression more closely, however we regraphed the data in **Fig. 5** to show the regression line and statistics for each of the new sets of data.

**Figure 5.**

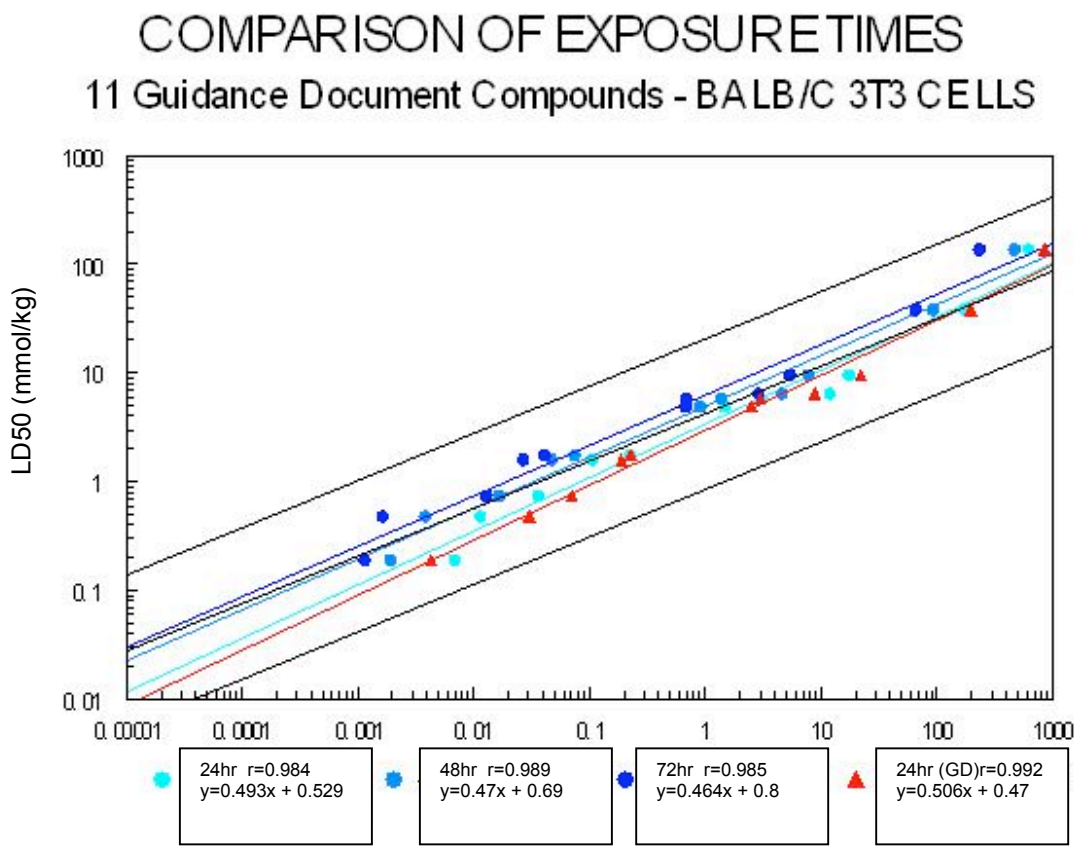


In this figure it can be seen that all the regression lines for the 3 new time points plus the *Guidance Document* data (red triangles) fall with in the regression boundaries. It again appears that the 48 hour values best fit the original regression line.

We now feel that for the 3T3 cells an extended exposure period (>24hour) should be used, and that 48 hours seems to help identify the more toxic compounds while not over estimating the less toxic ones.

**REFERENCES**

Halle W, Spielmann H. 1992. Two procedures for the prediction of acute toxicity (LD50) from cytotoxicity data. Altern Lab Anim 20:40-49.

ICCVAM. 2001b. Guidance Document On Using *In Vitro* Data To Estimate In Vivo Starting Doses For Acute Toxicity. NIH Publication No. 01-4500. Research Triangle Park, NC:National Institute for Environmental Health Sciences. Available: http://iccvam.niehs.nih.gov/ [accessed 01 November 2006].

Riddell RJ, Panacer DS, Wilde SM, Clothier RH, Balls M. 1986. The importance of exposure period and cell type in *in vitro* cytotoxicity tests. Altern Lab Anim 14:86-92.

# Appendix E2

## Neutral Red (NR) Dye Experiments – 3T3 Cells – IIVS

***[This Page Intentionally Left Blank***

Test Facility : IIVS
Chemical Code : N/A
2nd Chem. Code*: NRU

Study Number.: R&D - NR Stain Time Course in 3T3
96-Well Plate ID : 1
Experiment ID : RD96023T

## 96-WELL PLATE MAP

| | 1 | 2 | 3 | 4 | 5 | 6 | 7 | 8 | 9 | 10 | 11 | 12 |
|---|---|---|---|---|---|---|---|---|---|---|---|---|
| A | Blank | Blank | Blank | Blank | Blank | Blank | Blank | Blank | Blank | Blank | Blank | Blank |
| B | Blank | | | | | | | | | | | Blank |
| C | Blank | | | | | | | | | | | Blank |
| D | Blank | 3 hr | 3 hr | 2 hr | 2 hr | 1 hr | 1 hr | 30 min | 30 min | 15 min | 15 min | Blank |
| E | Blank | | | | | | | | | | | Blank |
| F | Blank | | | | | | | | | | | Blank |
| G | Blank | | | | | | | | | | | Blank |
| H | Blank | Blank | Blank | Blank | Blank | Blank | Blank | Blank | Blank | Blank | Blank | Blank |

## RAW ABSORBANCE DATA ($OD_{550}$)

| | 1 | 2 | 3 | 4 | 5 | 6 | 7 | 8 | 9 | 10 | 11 | 12 |
|---|---|---|---|---|---|---|---|---|---|---|---|---|
| A | 0.048 | 0.046 | 0.045 | 0.047 | 0.047 | 0.046 | 0.046 | 0.044 | 0.044 | 0.043 | 0.044 | 0.038 |
| B | 0.048 | 0.753 | 0.794 | 0.595 | 0.607 | 0.415 | 0.396 | 0.267 | 0.282 | 0.219 | 0.213 | 0.039 |
| C | 0.047 | 0.866 | 0.766 | 0.668 | 0.668 | 0.406 | 0.391 | 0.257 | 0.256 | 0.227 | 0.220 | 0.038 |
| D | 0.046 | 0.844 | 0.794 | 0.607 | 0.622 | 0.393 | 0.387 | 0.228 | 0.262 | 0.213 | 0.217 | 0.038 |
| E | 0.046 | 0.717 | 0.805 | 0.627 | 0.610 | 0.384 | 0.375 | 0.239 | 0.266 | 0.210 | 0.206 | 0.038 |
| F | 0.044 | 0.776 | 0.769 | 0.618 | 0.665 | 0.378 | 0.398 | 0.277 | 0.301 | 0.186 | 0.202 | 0.038 |
| G | 0.043 | 0.717 | 0.807 | 0.639 | 0.616 | 0.385 | 0.349 | 0.265 | 0.269 | 0.211 | 0.195 | 0.036 |
| H | 0.044 | 0.044 | 0.045 | 0.044 | 0.045 | 0.045 | 0.043 | 0.043 | 0.045 | 0.045 | 0.041 | 0.036 |

## CORRECTED ABSORBANCE (Sample $OD_{550}$ - Mean Blank $OD_{550}$)

| | 1 | 2 | 3 | 4 | 5 | 6 | 7 | 8 | 9 | 10 | 11 | 12 |
|---|---|---|---|---|---|---|---|---|---|---|---|---|
| A | 0.005 | 0.003 | 0.002 | 0.004 | 0.004 | 0.003 | 0.003 | 0.001 | 0.001 | 0.000 | 0.001 | -0.005 |
| B | 0.005 | 0.710 | 0.751 | 0.552 | 0.564 | 0.372 | 0.353 | 0.224 | 0.239 | 0.176 | 0.170 | -0.004 |
| C | 0.004 | 0.823 | 0.723 | 0.625 | 0.625 | 0.363 | 0.348 | 0.214 | 0.213 | 0.184 | 0.177 | -0.005 |
| D | 0.003 | 0.801 | 0.751 | 0.564 | 0.579 | 0.350 | 0.344 | 0.185 | 0.219 | 0.170 | 0.174 | -0.005 |
| E | 0.003 | 0.674 | 0.762 | 0.584 | 0.567 | 0.341 | 0.332 | 0.196 | 0.223 | 0.167 | 0.163 | -0.005 |
| F | 0.001 | 0.733 | 0.726 | 0.575 | 0.622 | 0.335 | 0.355 | 0.234 | 0.258 | 0.143 | 0.159 | -0.005 |
| G | 0.000 | 0.674 | 0.764 | 0.596 | 0.573 | 0.342 | 0.306 | 0.222 | 0.226 | 0.168 | 0.152 | -0.007 |
| H | 0.001 | 0.000 | 0.002 | 0.001 | 0.002 | 0.002 | 0.000 | 0.000 | 0.002 | 0.002 | -0.002 | -0.007 |

| Mean Blank = | 0.043 |
|---|---|

## RELATIVE VIABILITY (% OF VEHICLE CONTROL)

| | 1 | 2 | 3 | 4 | 5 | 6 | 7 | 8 | 9 | 10 | 11 | 12 |
|---|---|---|---|---|---|---|---|---|---|---|---|---|
| A | | | | | | | | | | | | |
| B | | 95.8% | 101.4% | 74.5% | 76.1% | 50.2% | 47.6% | 30.2% | 32.2% | 23.7% | 22.9% | |
| C | | 111.1% | 97.6% | 84.3% | 84.3% | 49.0% | 46.9% | 28.9% | 28.7% | 24.8% | 23.9% | |
| D | | 108.1% | 101.4% | 76.1% | 78.1% | 47.2% | 46.4% | 24.9% | 29.5% | 22.9% | 23.5% | |
| E | | 91.0% | 102.8% | 78.8% | 76.5% | 46.0% | 44.8% | 26.4% | 30.1% | 22.5% | 22.0% | |
| F | | 98.9% | 98.0% | 77.6% | 83.9% | 45.2% | 47.9% | 31.6% | 34.8% | 19.3% | 21.4% | |
| G | | 91.0% | 103.1% | 80.4% | 77.3% | 46.1% | 41.3% | 29.9% | 30.5% | 22.6% | 20.5% | |
| H | | | | | | | | | | | | |

| | 3 hr | 3 hr | 2 hr | 2 hr | 1 hr | 1 hr | 30 min | 30 min | 15 min | 15 min |
|---|---|---|---|---|---|---|---|---|---|---|
| Conc. (µg/mL) : | | | | | | | | | | |
| Mean Corr. OD : | 0.736 | 0.746 | 0.582 | 0.588 | 0.350 | 0.339 | 0.212 | 0.229 | 0.168 | 0.166 |
| SD : | 0.064 | 0.018 | 0.026 | 0.028 | 0.014 | 0.018 | 0.019 | 0.016 | 0.014 | 0.010 |
| Mean 3 hour : | 0.741 | | | | | | | | | |
| Mean Blank : | 0.043 | | | | | | | | | |
| % of 3 hour: | 99.3% | 100.7% | 78.6% | 79.4% | 47.3% | 45.8% | 28.6% | 31.0% | 22.6% | 22.3% |
| SD : | 8.6% | 2.4% | 3.5% | 3.7% | 1.9% | 2.5% | 2.5% | 2.2% | 1.9% | 1.3% |
| % CV : | 8.63% | 2.37% | 4.42% | 4.72% | 4.08% | 5.42% | 8.73% | 7.14% | 8.22% | 5.76% |
| hours | | | 3 | 2 | 1 | 0.50 | 0.25 | | | |
| % of 3 hour: | | | 100.0% | 79.0% | 46.5% | 29.8% | 22.5% | | | |

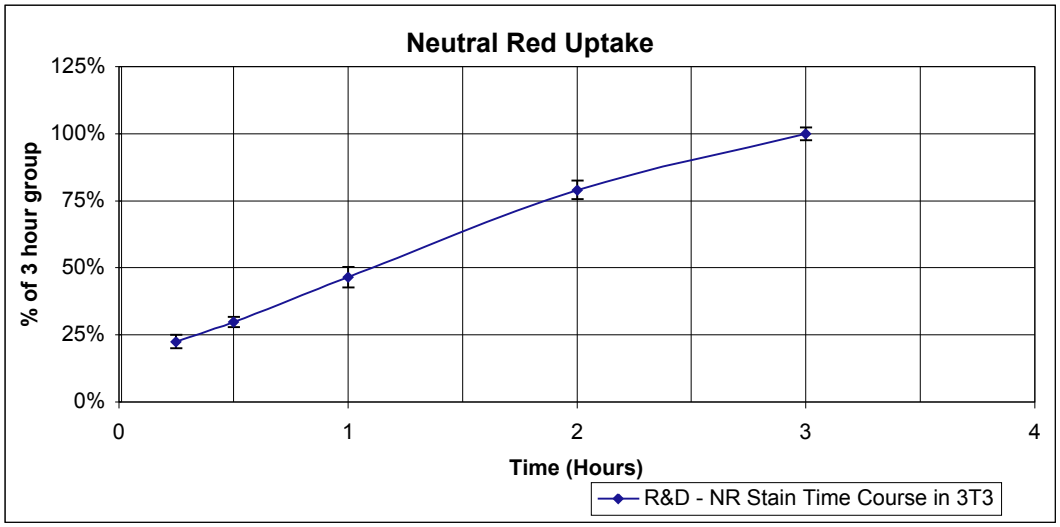
Neutral Red Uptake
125%
100%
75%
50%
25%
0%
% of 3 hour group
0
1
2
3
4
Time (Hours)
R&D - NR Stain Time Course in 3T3

Neutral Red Stain Prepared in DMEM5%NCS - TEST OF NR PREP 1 DAY PRIOR TO USE
Tested in 90-100% Confluent 3T3 Cultures

## 96-WELL PLATE MAP

| | 1 | 2 | 3 | 4 | 5 | 6 | 7 | 8 | 9 | 10 | 11 | 12 |
|---|---|---|---|---|---|---|---|---|---|---|---|---|
| A | Blank | Blank | Blank | Blank | Blank | Blank | Blank | Blank | Blank | Blank | Blank | Blank |
| B | Blank | | | | | | | | | | | Blank |
| C | Blank | | 50 ug/ml | | | 50 ug/ml | | | | 33 ug/ml | | Blank |
| D | Blank | | Prepared and filtered | | | Filtered before use | | | | Filtered before use | | Blank |
| E | Blank | | in evening before use | | | | | | | | | Blank |
| F | Blank | | Filtered before use | | | | | | | | | Blank |
| G | Blank | | | | | | | | | | | Blank |
| H | Blank | Blank | Blank | Blank | Blank | Blank | Blank | Blank | Blank | Blank | Blank | Blank |

## RAW ABSORBANCE DATA ($OD_{550}$)

| | 1 | 2 | 3 | 4 | 5 | 6 | 7 | 8 | 9 | 10 | 11 | 12 |
|---|---|---|---|---|---|---|---|---|---|---|---|---|
| A | 0.045 | 0.045 | 0.045 | 0.044 | 0.056 | 0.056 | 0.056 | 0.057 | 0.053 | 0.051 | 0.051 | 0.052 |
| B | 0.043 | 0.383 | 0.459 | 0.417 | 0.541 | 0.631 | 0.639 | 0.635 | 0.637 | 0.686 | 0.656 | 0.052 |
| C | 0.045 | 0.389 | 0.397 | 0.379 | 0.557 | 0.536 | 0.621 | 0.559 | 0.590 | 0.618 | 0.612 | 0.051 |
| D | 0.043 | 0.383 | 0.429 | 0.350 | 0.539 | 0.575 | 0.545 | 0.629 | 0.613 | 0.658 | 0.652 | 0.053 |
| E | 0.042 | 0.361 | 0.345 | 0.334 | 0.579 | 0.585 | 0.577 | 0.573 | 0.626 | 0.635 | 0.599 | 0.051 |
| F | 0.044 | 0.368 | 0.412 | 0.374 | 0.582 | 0.588 | 0.578 | 0.572 | 0.687 | 0.647 | 0.641 | 0.050 |
| G | 0.042 | 0.415 | 0.451 | 0.422 | 0.600 | 0.620 | 0.616 | 0.632 | 0.572 | 0.744 | 0.637 | 0.050 |
| H | 0.044 | 0.042 | 0.043 | 0.043 | 0.057 | 0.059 | 0.055 | 0.057 | 0.050 | 0.057 | 0.050 | 0.054 |

## CORRECTED ABSORBANCE (Sample $OD_{550}$ - Mean Blank $OD_{550}$)

| | 1 | 2 | 3 | 4 | 5 | 6 | 7 | 8 | 9 | 10 | 11 | 12 |
|---|---|---|---|---|---|---|---|---|---|---|---|---|
| A | 0.002 | 0.002 | 0.002 | 0.001 | 0.013 | 0.013 | 0.013 | 0.014 | 0.010 | 0.008 | 0.008 | 0.009 |
| B | 0.000 | 0.340 | 0.416 | 0.374 | 0.498 | 0.588 | 0.596 | 0.592 | 0.594 | 0.643 | 0.613 | 0.009 |
| C | 0.002 | 0.346 | 0.354 | 0.336 | 0.514 | 0.493 | 0.578 | 0.516 | 0.547 | 0.575 | 0.569 | 0.008 |
| D | 0.000 | 0.340 | 0.386 | 0.307 | 0.496 | 0.532 | 0.502 | 0.586 | 0.570 | 0.615 | 0.609 | 0.010 |
| E | -0.001 | 0.318 | 0.302 | 0.291 | 0.536 | 0.542 | 0.534 | 0.530 | 0.583 | 0.592 | 0.556 | 0.008 |
| F | 0.001 | 0.325 | 0.369 | 0.331 | 0.539 | 0.545 | 0.535 | 0.529 | 0.644 | 0.604 | 0.598 | 0.007 |
| G | -0.001 | 0.372 | 0.408 | 0.379 | 0.557 | 0.577 | 0.573 | 0.589 | 0.529 | 0.701 | 0.594 | 0.007 |
| H | 0.001 | 0.000 | 0.000 | 0.000 | 0.014 | 0.016 | 0.012 | 0.014 | 0.007 | 0.014 | 0.007 | 0.011 |

Mean Blank = 0.052 (Only the 14 wells from the 33 ug/ml group)

| | Neutral Red Stain Concentration | | | | | | | | | |
|---|---|---|---|---|---|---|---|---|---|---|
| Conc. (µg/mL) : | | 50.0 | | | 50.0 | | | | 33.0 | |
| Mean Corr. OD : | 0.340 | 0.372 | 0.336 | 0.523 | 0.546 | 0.553 | 0.557 | 0.578 | 0.621 | 0.590 |
| SD : | 0.019 | 0.042 | 0.035 | 0.025 | 0.034 | 0.035 | 0.035 | 0.040 | 0.045 | 0.023 |
| Group mean corr OD: | | 0.349 | | | 0.545 | | | | 0.596 | |

Note: Significant crystal formation was observed in the DMEM5%NCS/NR prepared 1 day prior, and the color was essentailly medium-colored. Much NR stain stripped out of solution. No ppt or crystalization observed in the wells during the NR loading of cells.

Neutral Red Stain Prepared in DMEM5%NCS/Filtered immediately before use
Tested in 90-100% Confluent 3T3 Cultures

## 96-WELL PLATE MAP

| | 1 | 2 | 3 | 4 | 5 | 6 | 7 | 8 | 9 | 10 | 11 | 12 |
|---|---|---|---|---|---|---|---|---|---|---|---|---|
| A | Blank | Blank | Blank | Blank | Blank | Blank | Blank | Blank | Blank | Blank | Blank | |
| B | Blank | 50 ug/ml | 50 ug/ml | 28 ug/ml | 28 ug/ml | 16 ug/ml | 16 ug/ml | 9 ug/ml | 9 ug/ml | 5 ug/ml | 5 ug/ml | |
| C | Blank | | | | | | | | | | | |
| D | Blank | | | | | | | | | | | Empty |
| E | Blank | | | | | | | | | | | |
| F | Blank | | | | | | | | | | | |
| G | Blank | | | | | | | | | | | |
| H | Blank | Blank | Blank | Blank | Blank | Blank | Blank | Blank | Blank | Blank | Blank | |

## RAW ABSORBANCE DATA ($OD_{550}$)

| | 1 | 2 | 3 | 4 | 5 | 6 | 7 | 8 | 9 | 10 | 11 | 12 |
|---|---|---|---|---|---|---|---|---|---|---|---|---|
| A | 0.076 | 0.051 | 0.05 | 0.045 | 0.044 | 0.041 | 0.041 | 0.041 | 0.039 | 0.038 | 0.037 | 0.037 |
| B | 0.058 | 0.553 | 0.535 | 0.58 | 0.587 | 0.421 | 0.353 | 0.225 | 0.221 | 0.149 | 0.145 | 0.037 |
| C | 0.053 | 0.561 | 0.503 | 0.517 | 0.549 | 0.338 | 0.345 | 0.213 | 0.203 | 0.144 | 0.155 | 0.035 |
| D | 0.048 | 0.493 | 0.527 | 0.489 | 0.495 | 0.351 | 0.331 | 0.196 | 0.196 | 0.143 | 0.161 | 0.038 |
| E | 0.047 | 0.491 | 0.497 | 0.528 | 0.571 | 0.312 | 0.321 | 0.188 | 0.195 | 0.132 | 0.172 | 0.038 |
| F | 0.073 | 0.606 | 0.697 | 0.53 | 0.6 | 0.36 | 0.373 | 0.239 | 0.218 | 0.143 | 0.163 | 0.036 |
| G | 0.072 | 0.63 | 0.497 | 0.563 | 0.592 | 0.399 | 0.39 | 0.235 | 0.21 | 0.145 | 0.157 | 0.037 |
| H | 0.056 | 0.089 | 0.055 | 0.043 | 0.045 | 0.041 | 0.04 | 0.039 | 0.039 | 0.042 | 0.04 | 0.036 |

## CORRECTED ABSORBANCE (Sample $OD_{550}$ - Mean Blank $OD_{550}$)

| | 1 | 2 | 3 | 4 | 5 | 6 | 7 | 8 | 9 | 10 | 11 | 12 |
|---|---|---|---|---|---|---|---|---|---|---|---|---|
| A | 0.033 | 0.008 | 0.007 | 0.002 | 0.001 | -0.002 | -0.002 | -0.002 | -0.004 | -0.005 | -0.006 | -0.006 |
| B | 0.015 | 0.510 | 0.492 | 0.537 | 0.544 | 0.378 | 0.310 | 0.182 | 0.178 | 0.106 | 0.102 | -0.006 |
| C | 0.010 | 0.518 | 0.460 | 0.474 | 0.506 | 0.295 | 0.302 | 0.170 | 0.160 | 0.101 | 0.112 | -0.008 |
| D | 0.005 | 0.450 | 0.484 | 0.446 | 0.452 | 0.308 | 0.288 | 0.153 | 0.153 | 0.100 | 0.118 | -0.005 |
| E | 0.004 | 0.448 | 0.454 | 0.485 | 0.528 | 0.269 | 0.278 | 0.145 | 0.152 | 0.089 | 0.129 | -0.005 |
| F | 0.030 | 0.563 | 0.654 | 0.487 | 0.557 | 0.317 | 0.330 | 0.196 | 0.175 | 0.100 | 0.120 | -0.007 |
| G | 0.029 | 0.587 | 0.454 | 0.520 | 0.549 | 0.356 | 0.347 | 0.192 | 0.167 | 0.102 | 0.114 | -0.006 |
| H | 0.013 | 0.000 | 0.012 | 0.000 | 0.002 | -0.002 | -0.003 | -0.004 | -0.004 | -0.001 | -0.003 | -0.007 |

Mean Blank = 0.039 (Only the 4 wells from the 5.0 ug/ml group)

| | Neutral Red Stain Concentration | | | | | | | | | |
|---|---|---|---|---|---|---|---|---|---|---|
| Conc. (µg/mL) : | 50.0 | 50.0 | 28.0 | 28.0 | 15.8 | 15.8 | 8.9 | 8.9 | 5.0 | 5.0 |
| Mean Corr. OD : | 0.512 | 0.499 | 0.491 | 0.522 | 0.320 | 0.309 | 0.173 | 0.164 | 0.099 | 0.116 |
| SD : | 0.057 | 0.077 | 0.033 | 0.039 | 0.040 | 0.026 | 0.021 | 0.011 | 0.006 | 0.009 |
| Group mean corr OD: | 0.506 | | 0.507 | | 0.315 | | 0.168 | | 0.107 | |
| | | | | | | | | | | |
| | graph | x | 50.0 | 28.0 | 15.8 | 8.9 | 5.0 | | | |
| | | y | 0.506 | 0.507 | 0.315 | 0.168 | 0.107 | | | |
| | | | | | | | | | | |

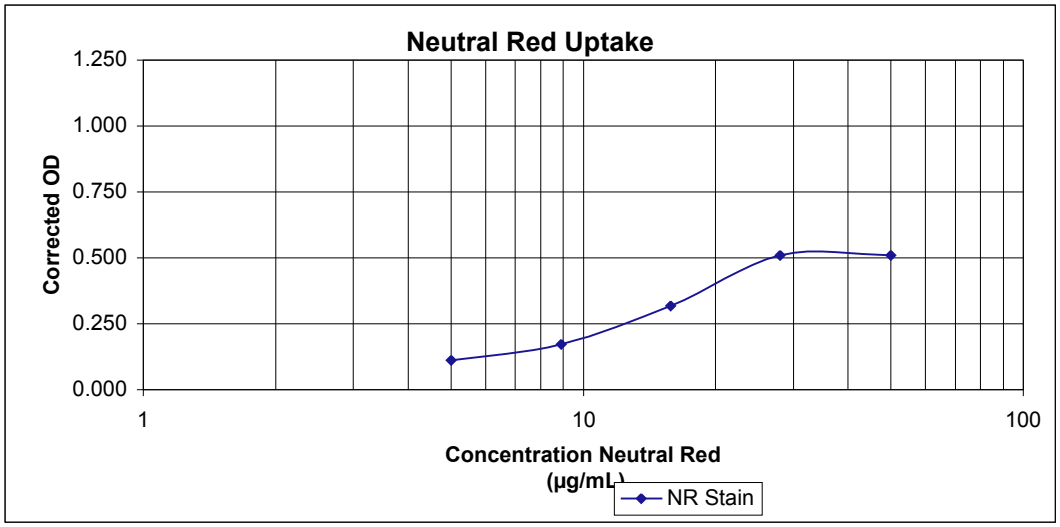

# Appendix E3

## Neutral Red (NR) Dye Experiments – NHK Cells – IIVS

***[This Page Intentionally Left Blank]***

Test Facility : IIVS
Chemical Code : N/A
2nd Chem. Code*: NRU

Study Number.: R&D - NR Stain Time Course in NHK
96-Well Plate ID : 1
Experiment ID : RD9602NK

## 96-WELL PLATE MAP

| | 1 | 2 | 3 | 4 | 5 | 6 | 7 | 8 | 9 | 10 | 11 | 12 |
|---|---|---|---|---|---|---|---|---|---|---|---|---|
| A | Blank | Blank | Blank | Blank | Blank | Blank | Blank | Blank | Blank | Blank | Blank | Blank |
| B | Blank | | | | | | | | | | | Blank |
| C | Blank | | | | | | | | | | | Blank |
| D | Blank | 3 hr | 3 hr | 2 hr | 2 hr | 1 hr | 1 hr | 30 min | 30 min | 15 min | 15 min | Blank |
| E | Blank | | | | | | | | | | | Blank |
| F | Blank | | | | | | | | | | | Blank |
| G | Blank | | | | | | | | | | | Blank |
| H | Blank | Blank | Blank | Blank | Blank | Blank | Blank | Blank | Blank | Blank | Blank | Blank |

## RAW ABSORBANCE DATA ($OD_{550}$)

| | 1 | 2 | 3 | 4 | 5 | 6 | 7 | 8 | 9 | 10 | 11 | 12 |
|---|---|---|---|---|---|---|---|---|---|---|---|---|
| A | 0.057 | 0.053 | 0.059 | 0.058 | 0.054 | 0.055 | 0.053 | 0.052 | 0.051 | 0.048 | 0.049 | 0.035 |
| B | 0.068 | 1.501 | 1.564 | 1.311 | 1.327 | 0.998 | 1.052 | 0.671 | 0.649 | 0.438 | 0.474 | 0.037 |
| C | 0.057 | 1.549 | 1.482 | 1.376 | 1.372 | 1.082 | 1.076 | 0.714 | 0.697 | 0.494 | 0.474 | 0.034 |
| D | 0.058 | 1.540 | 1.503 | 1.415 | 1.422 | 1.026 | 0.995 | 0.724 | 0.698 | 0.482 | 0.474 | 0.036 |
| E | 0.057 | 1.553 | 1.532 | 1.388 | 1.453 | 1.060 | 1.010 | 0.675 | 0.634 | 0.459 | 0.462 | 0.034 |
| F | 0.057 | 1.632 | 1.600 | 1.396 | 1.380 | 1.066 | 1.074 | 0.656 | 0.628 | 0.470 | 0.429 | 0.033 |
| G | 0.054 | 1.462 | 1.514 | 1.357 | 1.439 | 1.069 | 1.010 | 0.708 | 0.606 | 0.474 | 0.437 | 0.035 |
| H | 0.057 | 0.054 | 0.053 | 0.052 | 0.051 | 0.055 | 0.051 | 0.049 | 0.047 | 0.050 | 0.046 | 0.034 |

## CORRECTED ABSORBANCE (Sample $OD_{550}$ - Mean Blank $OD_{550}$)

| | 1 | 2 | 3 | 4 | 5 | 6 | 7 | 8 | 9 | 10 | 11 | 12 |
|---|---|---|---|---|---|---|---|---|---|---|---|---|
| A | 0.007 | 0.003 | 0.009 | 0.008 | 0.004 | 0.005 | 0.003 | 0.002 | 0.001 | -0.002 | -0.001 | -0.015 |
| B | 0.018 | 1.451 | 1.514 | 1.261 | 1.277 | 0.948 | 1.002 | 0.621 | 0.599 | 0.388 | 0.424 | -0.013 |
| C | 0.007 | 1.499 | 1.432 | 1.326 | 1.322 | 1.032 | 1.026 | 0.664 | 0.647 | 0.444 | 0.424 | -0.016 |
| D | 0.008 | 1.490 | 1.453 | 1.365 | 1.372 | 0.976 | 0.945 | 0.674 | 0.648 | 0.432 | 0.424 | -0.014 |
| E | 0.007 | 1.503 | 1.482 | 1.338 | 1.403 | 1.010 | 0.960 | 0.625 | 0.584 | 0.409 | 0.412 | -0.016 |
| F | 0.007 | 1.582 | 1.550 | 1.346 | 1.330 | 1.016 | 1.024 | 0.606 | 0.578 | 0.420 | 0.379 | -0.017 |
| G | 0.004 | 1.412 | 1.464 | 1.307 | 1.389 | 1.019 | 0.960 | 0.658 | 0.556 | 0.424 | 0.387 | -0.015 |
| H | 0.007 | 0.000 | 0.003 | 0.002 | 0.001 | 0.005 | 0.001 | -0.001 | -0.003 | 0.000 | -0.004 | -0.016 |

| Mean Blank = | 0.050 |
|---|---|

## RELATIVE VIABILITY (% OF VEHICLE CONTROL)

| | 1 | 2 | 3 | 4 | 5 | 6 | 7 | 8 | 9 | 10 | 11 | 12 |
|---|---|---|---|---|---|---|---|---|---|---|---|---|
| A | | | | | | | | | | | | |
| B | | 97.6% | 101.9% | 84.9% | 85.9% | 63.8% | 67.4% | 41.8% | 40.3% | 26.1% | 28.6% | |
| C | | 100.9% | 96.4% | 89.2% | 89.0% | 69.5% | 69.1% | 44.7% | 43.6% | 29.9% | 28.6% | |
| D | | 100.3% | 97.8% | 91.9% | 92.3% | 65.7% | 63.6% | 45.4% | 43.6% | 29.1% | 28.6% | |
| E | | 101.1% | 99.7% | 90.0% | 94.4% | 68.0% | 64.6% | 42.1% | 39.3% | 27.5% | 27.7% | |
| F | | 106.5% | 104.3% | 90.6% | 89.5% | 68.4% | 68.9% | 40.8% | 38.9% | 28.3% | 25.5% | |
| G | | 95.0% | 98.5% | 88.0% | 93.5% | 68.6% | 64.6% | 44.3% | 37.4% | 28.6% | 26.1% | |
| H | | | | | | | | | | | | |

| | 3 hr | 3 hr | 2 hr | 2 hr | 1 hr | 1 hr | 30 min | 30 min | 15 min | 15 min |
|---|---|---|---|---|---|---|---|---|---|---|
| Conc. (µg/mL) : | | | | | | | | | | |
| Mean Corr. OD : | 1.490 | 1.483 | 1.324 | 1.349 | 1.001 | 0.987 | 0.642 | 0.602 | 0.420 | 0.409 |
| SD : | 0.057 | 0.043 | 0.036 | 0.048 | 0.032 | 0.036 | 0.028 | 0.038 | 0.019 | 0.020 |
| Mean 3 hour : | 1.486 | | | | | | | | | |
| Mean Blank : | 0.050 | | | | | | | | | |
| % of 3 hour: | 100.2% | 99.8% | 89.1% | 90.8% | 67.3% | 66.4% | 43.2% | 40.5% | 28.3% | 27.5% |
| SD : | 3.8% | 2.9% | 2.4% | 3.2% | 2.1% | 2.4% | 1.9% | 2.5% | 1.3% | 1.4% |
| % CV : | 3.83% | 2.91% | 2.75% | 3.53% | 3.17% | 3.61% | 4.29% | 6.28% | 4.62% | 4.97% |
| hours | | | 3 | 2 | 1 | 0.50 | 0.25 | | | |
| % of 3 hour: | | | 100.0% | 89.9% | 66.8% | 41.9% | 27.9% | | | |

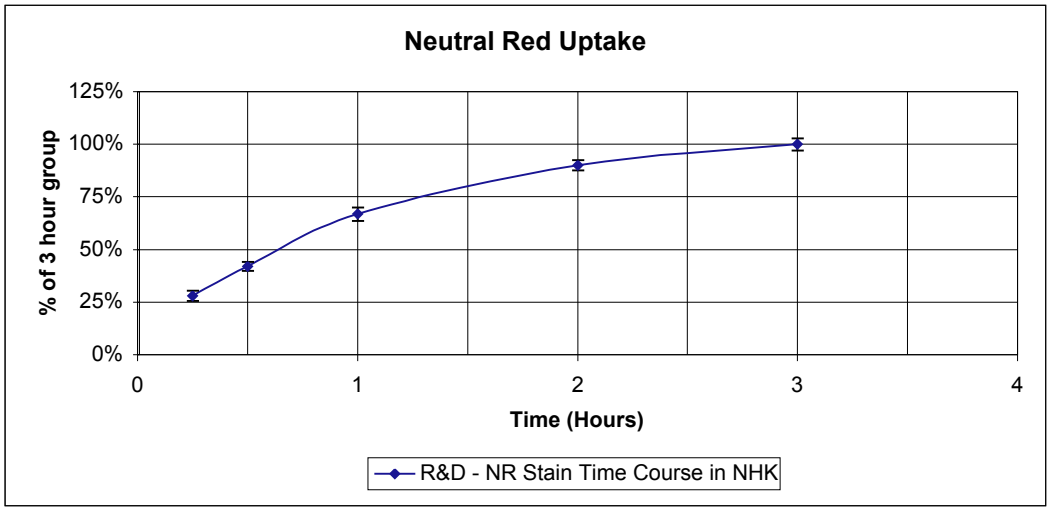
Neutral Red Uptake
125%
100%
75%
50%
25%
0%
% of 3 hour group
0
1
2
3
4
Time (Hours)
R&D - NR Stain Time Course in NHK

Neutral Red Stain Prepared in KGM - TEST OF NR PREP 1 DAY PRIOR TO USE
Tested in 90-100% Confluent NHK Cultures

## 96-WELL PLATE MAP

| | 1 | 2 | 3 | 4 | 5 | 6 | 7 | 8 | 9 | 10 | 11 |
|---|---|---|---|---|---|---|---|---|---|---|---|
| A | Blank | Blank | Blank | Blank | Blank | Blank | Blank | Blank | Blank | Blank | Blank |
| B | Blank | | | | | | | | | | |
| C | Blank | 50 ug/ml | | | 50 ug/ml | | | | 33 ug/ml | | |
| D | Blank | Prepared and filtered | | | Filtered before use | | | | Filtered before use | | |
| E | Blank | in evening before use | | | | | | | | | |
| F | Blank | Filtered before use | | | | | | | | | |
| G | Blank | | | | | | | | | | |
| H | Blank | Blank | Blank | Blank | Blank | Blank | Blank | Blank | Blank | Blank | Blank |

## RAW ABSORBANCE DATA ($OD_{550}$)

| | 1 | 2 | 3 | 4 | 5 | 6 | 7 | 8 | 9 | 10 | 11 |
|---|---|---|---|---|---|---|---|---|---|---|---|
| A | 0.062 | 0.061 | 0.063 | 0.064 | 0.063 | 0.062 | 0.060 | 0.060 | 0.052 | 0.053 | 0.051 |
| B | 0.055 | 1.306 | 1.545 | 1.530 | 1.514 | 1.403 | 1.421 | 1.297 | 1.249 | 1.136 | 1.134 |
| C | 0.060 | 1.530 | 1.520 | 1.554 | 1.471 | 1.536 | 1.416 | 1.415 | 1.308 | 1.160 | 1.189 |
| D | 0.062 | 1.454 | 1.527 | 1.513 | 1.511 | 1.472 | 1.491 | 1.438 | 1.217 | 1.192 | 1.173 |
| E | 0.067 | 1.423 | 1.433 | 1.505 | 1.577 | 1.469 | 1.448 | 1.474 | 1.199 | 1.249 | 1.158 |
| F | 0.057 | 1.423 | 1.591 | 1.577 | 1.577 | 1.403 | 1.431 | 1.347 | 1.250 | 1.235 | 1.102 |
| G | 0.065 | 1.430 | 1.468 | 1.393 | 1.319 | 1.432 | 1.304 | 1.416 | 1.243 | 1.117 | 1.110 |
| H | 0.064 | 0.059 | 0.060 | 0.064 | 0.064 | 0.065 | 0.061 | 0.064 | 0.060 | 0.055 | 0.060 |

## CORRECTED ABSORBANCE (Sample $OD_{550}$ - Mean Blank $OD_{550}$)

| | 1 | 2 | 3 | 4 | 5 | 6 | 7 | 8 | 9 | 10 | 11 |
|---|---|---|---|---|---|---|---|---|---|---|---|
| A | 0.012 | 0.011 | 0.013 | 0.014 | 0.013 | 0.012 | 0.010 | 0.010 | 0.002 | 0.003 | 0.001 |
| B | 0.005 | 1.256 | 1.495 | 1.480 | 1.464 | 1.353 | 1.371 | 1.247 | 1.199 | 1.086 | 1.084 |
| C | 0.010 | 1.480 | 1.470 | 1.504 | 1.421 | 1.486 | 1.366 | 1.365 | 1.258 | 1.110 | 1.139 |
| D | 0.012 | 1.404 | 1.477 | 1.463 | 1.461 | 1.422 | 1.441 | 1.388 | 1.167 | 1.142 | 1.123 |
| E | 0.017 | 1.373 | 1.383 | 1.455 | 1.527 | 1.419 | 1.398 | 1.424 | 1.149 | 1.199 | 1.108 |
| F | 0.007 | 1.373 | 1.541 | 1.527 | 1.527 | 1.353 | 1.381 | 1.297 | 1.200 | 1.185 | 1.052 |
| G | 0.015 | 1.380 | 1.418 | 1.343 | 1.269 | 1.382 | 1.254 | 1.366 | 1.193 | 1.067 | 1.060 |
| H | 0.014 | 0.000 | 0.010 | 0.014 | 0.014 | 0.015 | 0.011 | 0.014 | 0.010 | 0.005 | 0.010 |

Mean Blank = 0.055 (Only the 14 wells from the 33 ug/ml group)

| | Neutral Red Stain Concentration | | | | | | | | | |
|---|---|---|---|---|---|---|---|---|---|---|
| Conc. (µg/mL) : | | 50.0 | | | 50.0 | | | | 33.0 | |
| Mean Corr. OD : | 1.378 | 1.464 | 1.462 | 1.445 | 1.403 | 1.369 | 1.348 | 1.195 | 1.132 | 1.095 |
| SD : | 0.072 | 0.056 | 0.064 | 0.096 | 0.051 | 0.062 | 0.064 | 0.037 | 0.053 | 0.035 |
| Group mean corr OD: | | 1.435 | | | 1.391 | | | | 1.141 | |

Note: No crystal formation was observed in the KGM/NR prepared 1 day prior.
No ppt or crystalization observed in the wells during the NR loading of cells.

Neutral Red Stain Prepared in KGM/Filtered immediately before use
Tested in 90-100% Confluent NHK Cultures

## 96-WELL PLATE MAP

| | 1 | 2 | 3 | 4 | 5 | 6 | 7 | 8 | 9 | 10 | 11 | 12 |
|---|---|---|---|---|---|---|---|---|---|---|---|---|
| A | Blank | Blank | Blank | Blank | Blank | Blank | Blank | Blank | Blank | Blank | Blank | |
| B | Blank | 50 ug/ml | 50 ug/ml | 28 ug/ml | 28 ug/ml | 16 ug/ml | 16 ug/ml | 9 ug/ml | 9 ug/ml | 5 ug/ml | 5 ug/ml | |
| C | Blank | | | | | | | | | | | |
| D | Blank | | | | | | | | | | | empty |
| E | Blank | | | | | | | | | | | |
| F | Blank | | | | | | | | | | | |
| G | Blank | | | | | | | | | | | |
| H | Blank | Blank | Blank | Blank | Blank | Blank | Blank | Blank | Blank | Blank | Blank | |

## RAW ABSORBANCE DATA ($OD_{550}$)

| | 1 | 2 | 3 | 4 | 5 | 6 | 7 | 8 | 9 | 10 | 11 | 12 |
|---|---|---|---|---|---|---|---|---|---|---|---|---|
| A | 0.067 | 0.064 | 0.066 | 0.049 | 0.049 | 0.040 | 0.040 | 0.038 | 0.038 | 0.036 | 0.037 | 0.035 |
| B | 0.048 | 1.255 | 1.119 | 1.103 | 1.054 | 0.623 | 0.605 | 0.325 | 0.334 | 0.156 | 0.150 | 0.034 |
| C | 0.050 | 1.035 | 1.004 | 1.020 | 0.956 | 0.624 | 0.601 | 0.345 | 0.312 | 0.151 | 0.154 | 0.034 |
| D | 0.047 | 1.131 | 1.352 | 1.094 | 1.078 | 0.643 | 0.635 | 0.331 | 0.314 | 0.157 | 0.147 | 0.035 |
| E | 0.047 | 1.117 | 1.227 | 0.923 | 0.893 | 0.595 | 0.618 | 0.323 | 0.302 | 0.155 | 0.150 | 0.035 |
| F | 0.046 | 1.245 | 1.129 | 0.976 | 0.988 | 0.607 | 0.617 | 0.308 | 0.313 | 0.156 | 0.156 | 0.035 |
| G | 0.047 | 1.136 | 1.282 | 1.061 | 0.995 | 0.624 | 0.582 | 0.283 | 0.282 | 0.131 | 0.127 | 0.037 |
| H | 0.063 | 0.056 | 0.060 | 0.061 | 0.048 | 0.042 | 0.042 | 0.038 | 0.039 | 0.040 | 0.038 | 0.036 |

## CORRECTED ABSORBANCE (Sample $OD_{550}$ - Mean Blank $OD_{550}$)

| | 1 | 2 | 3 | 4 | 5 | 6 | 7 | 8 | 9 | 10 | 11 | 12 |
|---|---|---|---|---|---|---|---|---|---|---|---|---|
| A | 0.017 | 0.014 | 0.016 | -0.001 | -0.001 | -0.010 | -0.010 | -0.012 | -0.012 | -0.014 | -0.013 | -0.015 |
| B | -0.002 | 1.205 | 1.069 | 1.053 | 1.004 | 0.573 | 0.555 | 0.275 | 0.284 | 0.106 | 0.100 | -0.016 |
| C | 0.000 | 0.985 | 0.954 | 0.970 | 0.906 | 0.574 | 0.551 | 0.295 | 0.262 | 0.101 | 0.104 | -0.016 |
| D | -0.003 | 1.081 | 1.302 | 1.044 | 1.028 | 0.593 | 0.585 | 0.281 | 0.264 | 0.107 | 0.097 | -0.015 |
| E | -0.003 | 1.067 | 1.177 | 0.873 | 0.843 | 0.545 | 0.568 | 0.273 | 0.252 | 0.105 | 0.100 | -0.015 |
| F | -0.004 | 1.195 | 1.079 | 0.926 | 0.938 | 0.557 | 0.567 | 0.258 | 0.263 | 0.106 | 0.106 | -0.015 |
| G | -0.003 | 1.086 | 1.232 | 1.011 | 0.945 | 0.574 | 0.532 | 0.233 | 0.232 | 0.081 | 0.077 | -0.013 |
| H | 0.013 | 0.000 | 0.010 | 0.011 | -0.002 | -0.008 | -0.008 | -0.012 | -0.011 | -0.010 | -0.012 | -0.014 |

Mean Blank = 0.038 (Only the 4 wells from the 5.0 ug/ml group)

| | Neutral Red Stain Concentration | | | | | | | | | |
|---|---|---|---|---|---|---|---|---|---|---|
| Conc. (µg/mL) : | 50.0 | 50.0 | 28.0 | 28.0 | 15.8 | 15.8 | 8.9 | 8.9 | 5.0 | 5.0 |
| Mean Corr. OD : | 1.104 | 1.136 | 0.980 | 0.944 | 0.570 | 0.560 | 0.270 | 0.260 | 0.101 | 0.098 |
| SD : | 0.083 | 0.126 | 0.070 | 0.067 | 0.017 | 0.018 | 0.021 | 0.017 | 0.010 | 0.010 |
| Group mean corr OD: | 1.120 | | 0.962 | | 0.565 | | 0.265 | | 0.100 | |
| | | | | | | | | | | |
| | graph | x | 50.0 | 28.0 | 15.8 | 8.9 | 5.0 | | | |
| | | y | 1.120 | 0.962 | 0.565 | 0.265 | 0.100 | | | |
| | | | | | | | | | | |

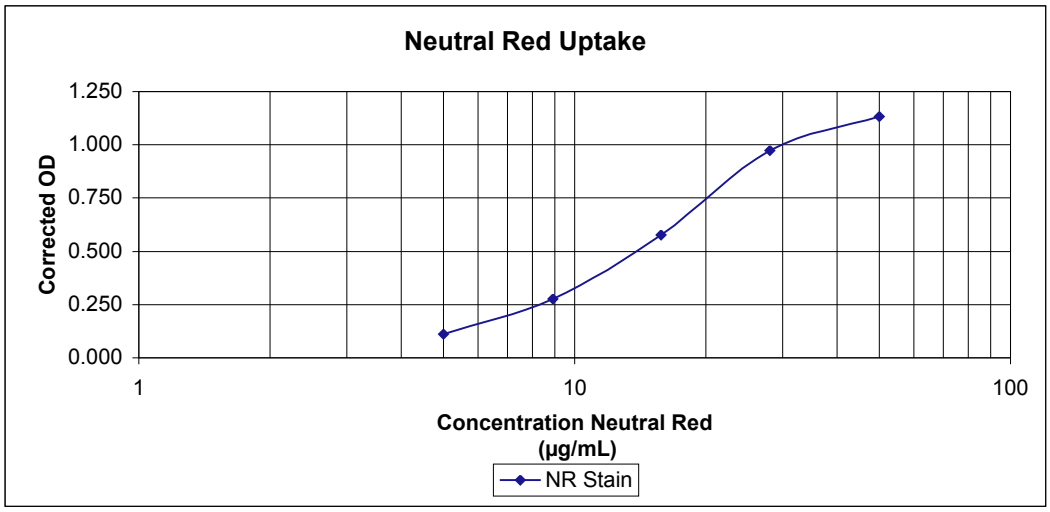

# Appendix E4

## Neutral Red (NR) Dye Experiments – 3T3 Cells – ECBC

***[This Page Intentionally Left Blank]***

Test Facility : ECBC
Chemical Code : SLS
2nd Chem. Code*: none

Study Number.: ECBC-3T3 Ia 0#
96-Well Plate ID : 090602-1
Experiment ID : SLS-B(25ug NR/ml 1hr)

## 96-WELL PLATE MAP

| | 1 | 2 | 3 | 4 | 5 | 6 | 7 | 8 | 9 | 10 | 11 | 12 |
|---|---|---|---|---|---|---|---|---|---|---|---|---|
| A | Blank | Blank | Blank | Blank | Blank | Blank | Blank | Blank | Blank | Blank | Blank | Blank |
| B | Blank | VC1 | C1 | C2 | C3 | C4 | C5 | C6 | C7 | C8 | VC2 | Blank |
| C | Blank | VC1 | C1 | C2 | C3 | C4 | C5 | C6 | C7 | C8 | VC2 | Blank |
| D | Blank | VC1 | C1 | C2 | C3 | C4 | C5 | C6 | C7 | C8 | VC2 | Blank |
| E | Blank | VC1 | C1 | C2 | C3 | C4 | C5 | C6 | C7 | C8 | VC2 | Blank |
| F | Blank | VC1 | C1 | C2 | C3 | C4 | C5 | C6 | C7 | C8 | VC2 | Blank |
| G | Blank | VC1 | C1 | C2 | C3 | C4 | C5 | C6 | C7 | C8 | VC2 | Blank |
| H | Blank | Blank | Blank | Blank | Blank | Blank | Blank | Blank | Blank | Blank | Blank | Blank |

## RAW ABSORBANCE DATA ($OD_{540}$)

| | 1 | 2 | 3 | 4 | 5 | 6 | 7 | 8 | 9 | 10 | 11 | 12 |
|---|---|---|---|---|---|---|---|---|---|---|---|---|
| A | 0.049 | 0.051 | 0.048 | 0.052 | 0.048 | 0.050 | 0.050 | 0.046 | 0.044 | 0.045 | 0.046 | 0.047 |
| B | 0.050 | 0.262 | 0.050 | 0.046 | 0.130 | 0.274 | 0.254 | 0.322 | 0.315 | 0.329 | 0.333 | 0.046 |
| C | 0.052 | 0.283 | 0.053 | 0.051 | 0.145 | 0.231 | 0.252 | 0.276 | 0.283 | 0.293 | 0.321 | 0.050 |
| D | 0.050 | 0.307 | 0.055 | 0.053 | 0.135 | 0.242 | 0.252 | 0.291 | 0.280 | 0.302 | 0.314 | 0.049 |
| E | 0.000 | 0.000 | 0.000 | 0.000 | 0.000 | 0.000 | 0.000 | 0.000 | 0.000 | 0.000 | 0.000 | 0.000 |
| F | 0.000 | 0.000 | 0.100 | 0.000 | 0.000 | 0.000 | 0.000 | 0.000 | 0.000 | 0.000 | 0.000 | 0.000 |
| G | 0.000 | 0.000 | 0.000 | 0.000 | 0.000 | 0.000 | 0.000 | 0.000 | 0.000 | 0.000 | 0.000 | 0.000 |
| H | 0.000 | 0.000 | 0.000 | 0.000 | 0.000 | 0.000 | 0.000 | 0.000 | 0.000 | 0.000 | 0.000 | 0.000 |

## CORRECTED ABSORBANCE (Sample $OD_{540}$ - Mean Blank $OD_{540}$)

| | 1 | 2 | 3 | 4 | 5 | 6 | 7 | 8 | 9 | 10 | 11 | 12 |
|---|---|---|---|---|---|---|---|---|---|---|---|---|
| A | 0.000 | 0.002 | -0.001 | 0.003 | -0.001 | 0.001 | 0.001 | -0.003 | -0.005 | -0.004 | -0.003 | -0.002 |
| B | 0.001 | 0.214 | 0.001 | -0.003 | 0.082 | 0.226 | 0.206 | 0.274 | 0.267 | 0.281 | 0.285 | -0.003 |
| C | 0.003 | 0.235 | 0.004 | 0.002 | 0.097 | 0.183 | 0.204 | 0.228 | 0.235 | 0.245 | 0.273 | 0.001 |
| D | 0.001 | 0.259 | 0.006 | 0.004 | 0.087 | 0.194 | 0.204 | 0.243 | 0.232 | 0.254 | 0.266 | 0.000 |
| E | -0.049 | -0.049 | -0.049 | -0.049 | -0.049 | -0.049 | -0.049 | -0.049 | -0.049 | -0.049 | -0.049 | -0.049 |
| F | -0.049 | -0.049 | 0.052 | -0.049 | -0.049 | -0.049 | -0.049 | -0.049 | -0.049 | -0.049 | -0.049 | -0.049 |
| G | -0.049 | -0.049 | -0.049 | -0.049 | -0.049 | -0.049 | -0.049 | -0.049 | -0.049 | -0.049 | -0.049 | -0.049 |
| H | -0.049 | 0.000 | -0.049 | -0.049 | -0.049 | -0.049 | -0.049 | -0.049 | -0.049 | -0.049 | -0.049 | -0.049 |

| Mean Blank = | 0.049 |
|---|---|

## RELATIVE VIABILITY (% OF VEHICLE CONTROL)

| | 1 | 2 | 3 | 4 | 5 | 6 | 7 | 8 | 9 | 10 | 11 | 12 |
|---|---|---|---|---|---|---|---|---|---|---|---|---|
| A | | | | | | | | | | | | |
| B | | 83.8% | 0.6% | -1.0% | 32.0% | 88.5% | 80.6% | 107.3% | 104.6% | 110.1% | 111.6% | |
| C | | 92.0% | 1.8% | 1.0% | 37.9% | 71.6% | 79.9% | 89.3% | 92.0% | 95.9% | 106.9% | |
| D | | 101.4% | 2.6% | 1.8% | 33.9% | 75.9% | 79.9% | 95.2% | 90.8% | 99.5% | 104.2% | |
| E | | -19.0% | -19.0% | -19.0% | -19.0% | -19.0% | -19.0% | -19.0% | -19.0% | -19.0% | -19.0% | |
| F | | -19.0% | 20.2% | -19.0% | -19.0% | -19.0% | -19.0% | -19.0% | -19.0% | -19.0% | -19.0% | |
| G | | -19.0% | -19.0% | -19.0% | -19.0% | -19.0% | -19.0% | -19.0% | -19.0% | -19.0% | -19.0% | |
| H | | | | | | | | | | | | |

Test Facility : ECBC
Chemical Code : SLS
2nd Chem. Code*: none

Study Number.: ECBC-3T3 Ia 0#
96-Well Plate ID : 090602-1
Experiment ID : SLS-B(25ug NR/ml 1hr)

| | VC1 | C1 | C2 | C3 | C4 | C5 | C6 | C7 | C8 | VC2 |
|---|---|---|---|---|---|---|---|---|---|---|
| Conc. (µg/mL) : | 0.0 | 100.0 | 68.0 | 46.3 | 31.5 | 21.4 | 14.6 | 9.9 | 6.7 | 0.0 |
| Mean Corr. OD : | 0.236 | 0.004 | 0.001 | 0.088 | 0.201 | 0.204 | 0.248 | 0.244 | 0.260 | 0.274 |
| SD : | 0.023 | 0.003 | 0.004 | 0.008 | 0.022 | 0.001 | 0.023 | 0.019 | 0.019 | 0.010 |
| Mean Vehicle Control : | 0.255 | | | | | | | | | |
| Mean Blank : | 0.049 | | | | | | | | | |
| % of Vehicle Control : | 92.4% | 1.6% | 0.6% | 34.6% | 78.7% | 80.1% | 97.3% | 95.8% | 101.8% | 107.6% |
| SD : | 8.8% | 1.0% | 1.4% | 3.0% | 8.8% | 0.5% | 9.2% | 7.6% | 7.4% | 3.8% |
| % CV : | 9.56% | 60.40% | 240.37% | 8.66% | 11.14% | 0.57% | 9.47% | 7.95% | 7.22% | 3.50% |
| Mean VC - VC1 (%) : | 7.59% | | | | | | | | | |
| Mean VC - VC2 (%) : | -7.59% | | | | | | | | | |
| Mean Absolute OD : | 0.303 | | | | | | | | | |

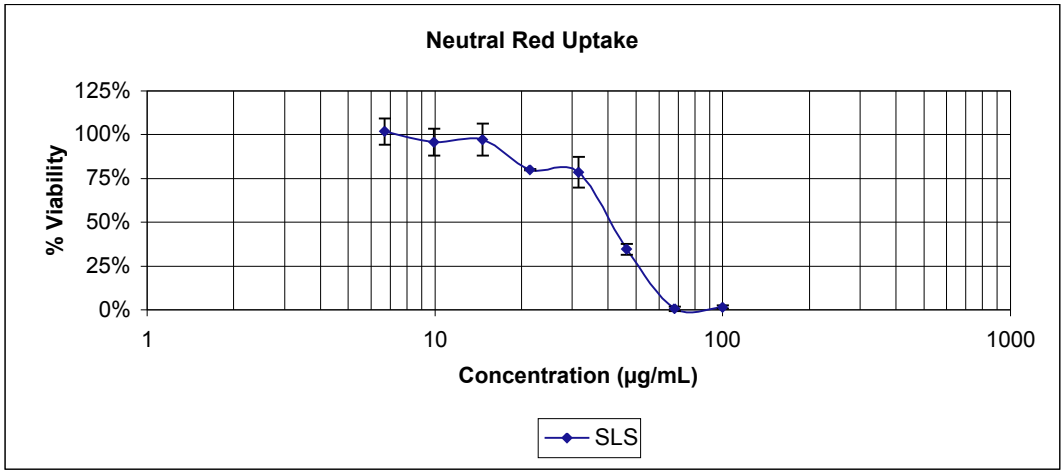

Test Facility : ECBC
Chemical Code : SLS
2nd Chem. Code*: none

Study Number.: ECBC-3T3 Ia 0#
96-Well Plate ID : 090602-2
Experiment ID : SLS-B(50ug NR/ml 1hr)

## 96-WELL PLATE MAP

| | 1 | 2 | 3 | 4 | 5 | 6 | 7 | 8 | 9 | 10 | 11 | 12 |
|---|---|---|---|---|---|---|---|---|---|---|---|---|
| A | Blank | Blank | Blank | Blank | Blank | Blank | Blank | Blank | Blank | Blank | Blank | Blank |
| B | Blank | VC1 | C1 | C2 | C3 | C4 | C5 | C6 | C7 | C8 | VC2 | Blank |
| C | Blank | VC1 | C1 | C2 | C3 | C4 | C5 | C6 | C7 | C8 | VC2 | Blank |
| D | Blank | VC1 | C1 | C2 | C3 | C4 | C5 | C6 | C7 | C8 | VC2 | Blank |
| E | Blank | VC1 | C1 | C2 | C3 | C4 | C5 | C6 | C7 | C8 | VC2 | Blank |
| F | Blank | VC1 | C1 | C2 | C3 | C4 | C5 | C6 | C7 | C8 | VC2 | Blank |
| G | Blank | VC1 | C1 | C2 | C3 | C4 | C5 | C6 | C7 | C8 | VC2 | Blank |
| H | Blank | Blank | Blank | Blank | Blank | Blank | Blank | Blank | Blank | Blank | Blank | Blank |

## RAW ABSORBANCE DATA ($OD_{540}$)

| | 1 | 2 | 3 | 4 | 5 | 6 | 7 | 8 | 9 | 10 | 11 | 12 |
|---|---|---|---|---|---|---|---|---|---|---|---|---|
| A | 0.056 | 0.061 | 0.063 | 0.055 | 0.052 | 0.051 | 0.058 | 0.050 | 0.050 | 0.052 | 0.050 | 0.051 |
| B | 0.088 | 0.377 | 0.057 | 0.053 | 0.192 | 0.315 | 0.325 | 0.364 | 0.402 | 0.403 | 0.396 | 0.053 |
| C | 0.058 | 0.378 | 0.062 | 0.058 | 0.158 | 0.277 | 0.337 | 0.379 | 0.400 | 0.391 | 0.386 | 0.051 |
| D | 0.061 | 0.373 | 0.054 | 0.051 | 0.182 | 0.308 | 0.343 | 0.367 | 0.425 | 0.420 | 0.409 | 0.050 |
| E | 0.000 | 0.000 | 0.000 | 0.000 | 0.000 | 0.000 | 0.000 | 0.000 | 0.000 | 0.000 | 0.000 | 0.000 |
| F | 0.000 | 0.000 | 0.100 | 0.000 | 0.000 | 0.000 | 0.000 | 0.000 | 0.000 | 0.000 | 0.000 | 0.000 |
| G | 0.000 | 0.000 | 0.000 | 0.000 | 0.000 | 0.000 | 0.000 | 0.000 | 0.000 | 0.000 | 0.000 | 0.000 |
| H | 0.000 | 0.000 | 0.000 | 0.000 | 0.000 | 0.000 | 0.000 | 0.000 | 0.000 | 0.000 | 0.000 | 0.000 |

## CORRECTED ABSORBANCE (Sample $OD_{540}$ - Mean Blank $OD_{540}$)

| | 1 | 2 | 3 | 4 | 5 | 6 | 7 | 8 | 9 | 10 | 11 | 12 |
|---|---|---|---|---|---|---|---|---|---|---|---|---|
| A | 0.007 | 0.013 | 0.015 | 0.006 | 0.003 | 0.002 | 0.009 | 0.001 | 0.001 | 0.003 | 0.001 | 0.002 |
| B | 0.040 | 0.329 | 0.008 | 0.004 | 0.144 | 0.267 | 0.277 | 0.316 | 0.354 | 0.355 | 0.348 | 0.004 |
| C | 0.009 | 0.330 | 0.014 | 0.009 | 0.110 | 0.229 | 0.289 | 0.331 | 0.352 | 0.343 | 0.338 | 0.002 |
| D | 0.013 | 0.325 | 0.005 | 0.002 | 0.134 | 0.260 | 0.295 | 0.319 | 0.377 | 0.372 | 0.361 | 0.001 |
| E | -0.049 | -0.049 | -0.049 | -0.049 | -0.049 | -0.049 | -0.049 | -0.049 | -0.049 | -0.049 | -0.049 | -0.049 |
| F | -0.049 | -0.049 | 0.052 | -0.049 | -0.049 | -0.049 | -0.049 | -0.049 | -0.049 | -0.049 | -0.049 | -0.049 |
| G | -0.049 | -0.049 | -0.049 | -0.049 | -0.049 | -0.049 | -0.049 | -0.049 | -0.049 | -0.049 | -0.049 | -0.049 |
| H | -0.049 | 0.000 | -0.049 | -0.049 | -0.049 | -0.049 | -0.049 | -0.049 | -0.049 | -0.049 | -0.049 | -0.049 |

| Mean Blank = | 0.056 |
|---|---|

## RELATIVE VIABILITY (% OF VEHICLE CONTROL)

| | 1 | 2 | 3 | 4 | 5 | 6 | 7 | 8 | 9 | 10 | 11 | 12 |
|---|---|---|---|---|---|---|---|---|---|---|---|---|
| A | | | | | | | | | | | | |
| B | | 128.9% | 3.3% | 1.8% | 56.3% | 104.6% | 108.5% | 123.8% | 138.7% | 139.1% | 136.4% | |
| C | | 129.3% | 5.3% | 3.7% | 43.0% | 89.7% | 113.2% | 129.7% | 137.9% | 134.4% | 132.4% | |
| D | | 127.3% | 2.2% | 1.0% | 52.4% | 101.8% | 115.6% | 125.0% | 147.7% | 145.8% | 141.5% | |
| E | | -19.0% | -19.0% | -19.0% | -19.0% | -19.0% | -19.0% | -19.0% | -19.0% | -19.0% | -19.0% | |
| F | | -19.0% | 20.2% | -19.0% | -19.0% | -19.0% | -19.0% | -19.0% | -19.0% | -19.0% | -19.0% | |
| G | | -19.0% | -19.0% | -19.0% | -19.0% | -19.0% | -19.0% | -19.0% | -19.0% | -19.0% | -19.0% | |
| H | | | | | | | | | | | | |

Test Facility : ECBC
Chemical Code : SLS
2nd Chem. Code*: none

Study Number.: ECBC-3T3 Ia 0#
96-Well Plate ID : 090602-2
Experiment ID : SLS-B(50ug NR/ml 1hr)

| | VC1 | C1 | C2 | C3 | C4 | C5 | C6 | C7 | C8 | VC2 |
|---|---|---|---|---|---|---|---|---|---|---|
| Conc. (µg/mL) : | 0.0 | 100.0 | 68.0 | 46.3 | 31.5 | 21.4 | 14.6 | 9.9 | 6.7 | 0.0 |
| Mean Corr. OD : | 0.328 | 0.009 | 0.005 | 0.129 | 0.252 | 0.287 | 0.322 | 0.361 | 0.356 | 0.349 |
| SD : | 0.003 | 0.004 | 0.004 | 0.017 | 0.020 | 0.009 | 0.008 | 0.014 | 0.015 | 0.012 |
| Mean Vehicle Control : | 0.338 | | | | | | | | | |
| Mean Blank : | 0.056 | | | | | | | | | |
| % of Vehicle Control : | 128.5% | 3.6% | 2.2% | 50.6% | 98.7% | 112.4% | 126.2% | 141.5% | 139.8% | 136.8% |
| SD : | 1.0% | 1.6% | 1.4% | 6.9% | 7.9% | 3.6% | 3.1% | 5.5% | 5.7% | 4.5% |
| % CV : | 0.81% | 44.09% | 65.56% | 13.56% | 8.04% | 3.20% | 2.47% | 3.85% | 4.09% | 3.31% |
| Mean VC - VC1 (%) : | 3.11% | | | | | | | | | |
| Mean VC - VC2 (%) : | -3.11% | | | | | | | | | |
| Mean Absolute OD : | 0.387 | | | | | | | | | |

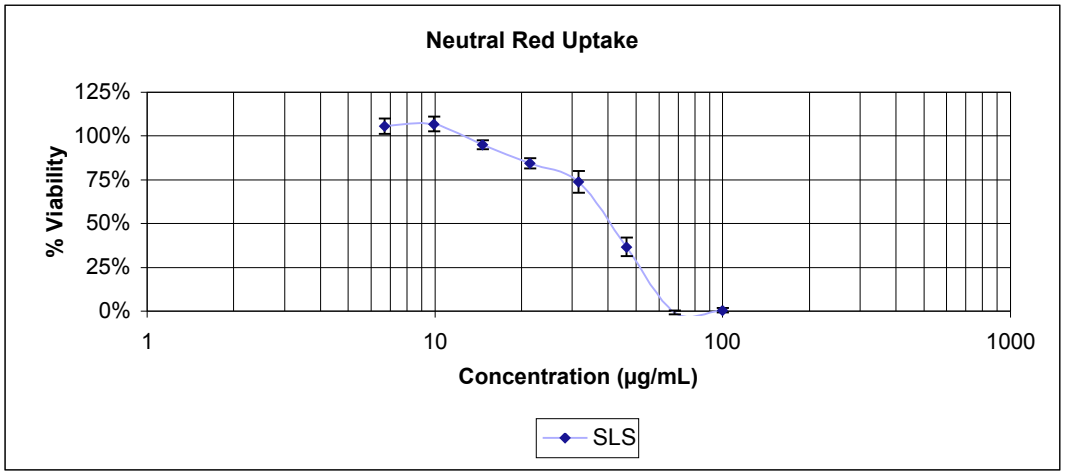

Test Facility : ECBC
Chemical Code : SLS
2nd Chem. Code*: none

Study Number.: ECBC-3T3 Ia 0#
96-Well Plate ID : 090602-2
Experiment ID : SLS-B(25ug NR/ml 3hr)

## 96-WELL PLATE MAP

| | 1 | 2 | 3 | 4 | 5 | 6 | 7 | 8 | 9 | 10 | 11 | 12 |
|---|---|---|---|---|---|---|---|---|---|---|---|---|
| A | Blank | Blank | Blank | Blank | Blank | Blank | Blank | Blank | Blank | Blank | Blank | Blank |
| B | Blank | VC1 | C1 | C2 | C3 | C4 | C5 | C6 | C7 | C8 | VC2 | Blank |
| C | Blank | VC1 | C1 | C2 | C3 | C4 | C5 | C6 | C7 | C8 | VC2 | Blank |
| D | Blank | VC1 | C1 | C2 | C3 | C4 | C5 | C6 | C7 | C8 | VC2 | Blank |
| E | Blank | VC1 | C1 | C2 | C3 | C4 | C5 | C6 | C7 | C8 | VC2 | Blank |
| F | Blank | VC1 | C1 | C2 | C3 | C4 | C5 | C6 | C7 | C8 | VC2 | Blank |
| G | Blank | VC1 | C1 | C2 | C3 | C4 | C5 | C6 | C7 | C8 | VC2 | Blank |
| H | Blank | Blank | Blank | Blank | Blank | Blank | Blank | Blank | Blank | Blank | Blank | Blank |

## RAW ABSORBANCE DATA ($OD_{540}$)

| | 1 | 2 | 3 | 4 | 5 | 6 | 7 | 8 | 9 | 10 | 11 | 12 |
|---|---|---|---|---|---|---|---|---|---|---|---|---|
| A | 0.052 | 0.047 | 0.050 | 0.048 | 0.046 | 0.048 | 0.046 | 0.048 | 0.046 | 0.046 | 0.046 | 0.046 |
| B | 0.049 | 0.559 | 0.047 | 0.050 | 0.175 | 0.387 | 0.506 | 0.474 | 0.580 | 0.489 | 0.610 | 0.048 |
| C | 0.052 | 0.613 | 0.051 | 0.061 | 0.183 | 0.414 | 0.525 | 0.518 | 0.487 | 0.444 | 0.520 | 0.047 |
| D | 0.052 | 0.554 | 0.052 | 0.052 | 0.195 | 0.364 | 0.507 | 0.523 | 0.527 | 0.555 | 0.485 | 0.057 |
| E | 0.000 | 0.000 | 0.000 | 0.000 | 0.000 | 0.000 | 0.000 | 0.000 | 0.000 | 0.000 | 0.000 | 0.000 |
| F | 0.000 | 0.000 | 0.100 | 0.000 | 0.000 | 0.000 | 0.000 | 0.000 | 0.000 | 0.000 | 0.000 | 0.000 |
| G | 0.000 | 0.000 | 0.000 | 0.000 | 0.000 | 0.000 | 0.000 | 0.000 | 0.000 | 0.000 | 0.000 | 0.000 |
| H | 0.000 | 0.000 | 0.000 | 0.000 | 0.000 | 0.000 | 0.000 | 0.000 | 0.000 | 0.000 | 0.000 | 0.000 |

## CORRECTED ABSORBANCE (Sample $OD_{540}$ - Mean Blank $OD_{540}$)

| | 1 | 2 | 3 | 4 | 5 | 6 | 7 | 8 | 9 | 10 | 11 | 12 |
|---|---|---|---|---|---|---|---|---|---|---|---|---|
| A | 0.003 | -0.002 | 0.001 | -0.001 | -0.003 | -0.001 | -0.003 | -0.001 | -0.003 | -0.003 | -0.003 | -0.003 |
| B | 0.000 | 0.511 | -0.002 | 0.001 | 0.127 | 0.339 | 0.458 | 0.426 | 0.532 | 0.441 | 0.562 | -0.001 |
| C | 0.003 | 0.565 | 0.002 | 0.013 | 0.135 | 0.366 | 0.477 | 0.470 | 0.439 | 0.396 | 0.472 | -0.002 |
| D | 0.003 | 0.506 | 0.003 | 0.003 | 0.147 | 0.316 | 0.459 | 0.475 | 0.479 | 0.507 | 0.437 | 0.008 |
| E | -0.049 | -0.049 | -0.049 | -0.049 | -0.049 | -0.049 | -0.049 | -0.049 | -0.049 | -0.049 | -0.049 | -0.049 |
| F | -0.049 | -0.049 | 0.052 | -0.049 | -0.049 | -0.049 | -0.049 | -0.049 | -0.049 | -0.049 | -0.049 | -0.049 |
| G | -0.049 | -0.049 | -0.049 | -0.049 | -0.049 | -0.049 | -0.049 | -0.049 | -0.049 | -0.049 | -0.049 | -0.049 |
| H | -0.049 | 0.000 | -0.049 | -0.049 | -0.049 | -0.049 | -0.049 | -0.049 | -0.049 | -0.049 | -0.049 | -0.049 |

| Mean Blank = | 0.049 |
|---|---|

## RELATIVE VIABILITY (% OF VEHICLE CONTROL)

| | 1 | 2 | 3 | 4 | 5 | 6 | 7 | 8 | 9 | 10 | 11 | 12 |
|---|---|---|---|---|---|---|---|---|---|---|---|---|
| A | | | | | | | | | | | | |
| B | | 200.3% | -0.6% | 0.6% | 49.6% | 132.8% | 179.5% | 167.0% | 208.6% | 172.9% | 220.3% | |
| C | | 221.5% | 1.0% | 4.9% | 52.8% | 143.4% | 187.0% | 184.2% | 172.1% | 155.2% | 185.0% | |
| D | | 198.4% | 1.4% | 1.4% | 57.5% | 123.8% | 179.9% | 186.2% | 187.8% | 198.8% | 171.3% | |
| E | | -19.0% | -19.0% | -19.0% | -19.0% | -19.0% | -19.0% | -19.0% | -19.0% | -19.0% | -19.0% | |
| F | | -19.0% | 20.2% | -19.0% | -19.0% | -19.0% | -19.0% | -19.0% | -19.0% | -19.0% | -19.0% | |
| G | | -19.0% | -19.0% | -19.0% | -19.0% | -19.0% | -19.0% | -19.0% | -19.0% | -19.0% | -19.0% | |
| H | | | | | | | | | | | | |

Test Facility : ECBC
Chemical Code : SLS
2nd Chem. Code*: none

Study Number.: ECBC-3T3 Ia 0#
96-Well Plate ID : 090602-2
Experiment ID : SLS-B(25ug NR/ml 3hr)

| | VC1 | C1 | C2 | C3 | C4 | C5 | C6 | C7 | C8 | VC2 |
|---|---|---|---|---|---|---|---|---|---|---|
| Conc. (µg/mL) : | 0.0 | 100.0 | 68.0 | 46.3 | 31.5 | 21.4 | 14.6 | 9.9 | 6.7 | 0.0 |
| Mean Corr. OD : | 0.527 | 0.001 | 0.006 | 0.136 | 0.340 | 0.464 | 0.457 | 0.483 | 0.448 | 0.490 |
| SD : | 0.033 | 0.003 | 0.006 | 0.010 | 0.025 | 0.011 | 0.027 | 0.047 | 0.056 | 0.064 |
| Mean Vehicle Control : | 0.508 | | | | | | | | | |
| Mean Blank : | 0.049 | | | | | | | | | |
| % of Vehicle Control : | 206.7% | 0.6% | 2.3% | 53.3% | 133.4% | 182.1% | 179.1% | 189.5% | 175.6% | 192.2% |
| SD : | 12.8% | 1.0% | 2.3% | 4.0% | 9.8% | 4.2% | 10.6% | 18.3% | 21.9% | 25.3% |
| % CV : | 6.21% | 176.38% | 100.45% | 7.41% | 7.36% | 2.30% | 5.91% | 9.66% | 12.48% | 13.16% |
| Mean VC - VC1 (%) : | -3.64% | | | | | | | | | |
| Mean VC - VC2 (%) : | 3.64% | | | | | | | | | |
| Mean Absolute OD : | 0.557 | | | | | | | | | |

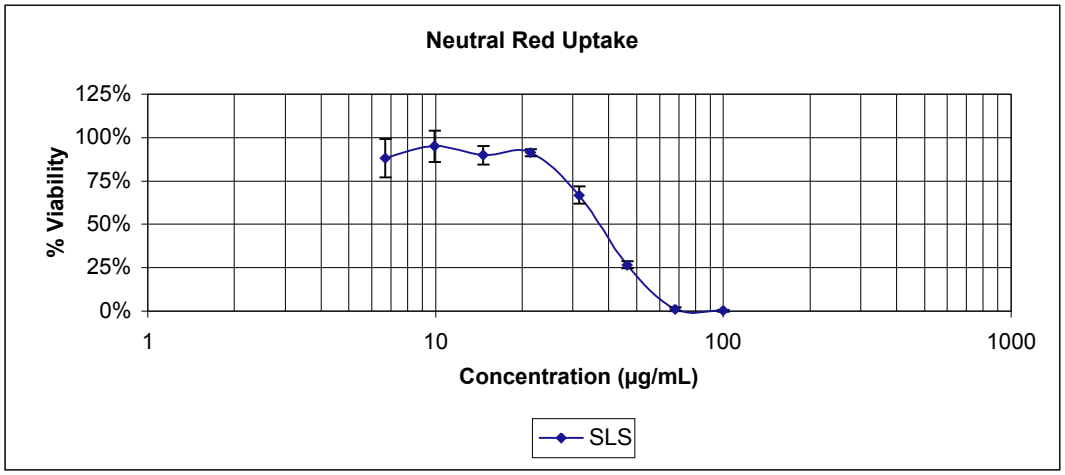

Test Facility : ECBC
Chemical Code : SLS
2nd Chem. Code*: none

Study Number.: ECBC-3T3 Ia 0#
96-Well Plate ID : 090602-2
Experiment ID : SLS-B(50ug NR/ml 3hr)

## 96-WELL PLATE MAP

| | 1 | 2 | 3 | 4 | 5 | 6 | 7 | 8 | 9 | 10 | 11 | 12 |
|---|---|---|---|---|---|---|---|---|---|---|---|---|
| A | Blank | Blank | Blank | Blank | Blank | Blank | Blank | Blank | Blank | Blank | Blank | Blank |
| B | Blank | VC1 | C1 | C2 | C3 | C4 | C5 | C6 | C7 | C8 | VC2 | Blank |
| C | Blank | VC1 | C1 | C2 | C3 | C4 | C5 | C6 | C7 | C8 | VC2 | Blank |
| D | Blank | VC1 | C1 | C2 | C3 | C4 | C5 | C6 | C7 | C8 | VC2 | Blank |
| E | Blank | VC1 | C1 | C2 | C3 | C4 | C5 | C6 | C7 | C8 | VC2 | Blank |
| F | Blank | VC1 | C1 | C2 | C3 | C4 | C5 | C6 | C7 | C8 | VC2 | Blank |
| G | Blank | VC1 | C1 | C2 | C3 | C4 | C5 | C6 | C7 | C8 | VC2 | Blank |
| H | Blank | Blank | Blank | Blank | Blank | Blank | Blank | Blank | Blank | Blank | Blank | Blank |

## RAW ABSORBANCE DATA ($OD_{540}$)

| | 1 | 2 | 3 | 4 | 5 | 6 | 7 | 8 | 9 | 10 | 11 | 12 |
|---|---|---|---|---|---|---|---|---|---|---|---|---|
| A | 0.059 | 0.065 | 0.053 | 0.052 | 0.054 | 0.052 | 0.054 | 0.053 | 0.056 | 0.053 | 0.054 | 0.051 |
| B | 0.057 | 0.513 | 0.057 | 0.056 | 0.154 | 0.302 | 0.416 | 0.485 | 0.473 | 0.457 | 0.485 | 0.050 |
| C | 0.059 | 0.488 | 0.058 | 0.056 | 0.152 | 0.326 | 0.420 | 0.460 | 0.500 | 0.438 | 0.562 | 0.059 |
| D | 0.059 | 0.516 | 0.054 | 0.056 | 0.146 | 0.326 | 0.496 | 0.447 | 0.478 | 0.455 | 0.508 | 0.051 |
| E | 0.000 | 0.000 | 0.000 | 0.000 | 0.000 | 0.000 | 0.000 | 0.000 | 0.000 | 0.000 | 0.000 | 0.000 |
| F | 0.000 | 0.000 | 0.100 | 0.000 | 0.000 | 0.000 | 0.000 | 0.000 | 0.000 | 0.000 | 0.000 | 0.000 |
| G | 0.000 | 0.000 | 0.000 | 0.000 | 0.000 | 0.000 | 0.000 | 0.000 | 0.000 | 0.000 | 0.000 | 0.000 |
| H | 0.000 | 0.000 | 0.000 | 0.000 | 0.000 | 0.000 | 0.000 | 0.000 | 0.000 | 0.000 | 0.000 | 0.000 |

## CORRECTED ABSORBANCE (Sample $OD_{540}$ - Mean Blank $OD_{540}$)

| | 1 | 2 | 3 | 4 | 5 | 6 | 7 | 8 | 9 | 10 | 11 | 12 |
|---|---|---|---|---|---|---|---|---|---|---|---|---|
| A | 0.011 | 0.017 | 0.004 | 0.003 | 0.005 | 0.003 | 0.005 | 0.004 | 0.007 | 0.004 | 0.005 | 0.002 |
| B | 0.008 | 0.465 | 0.008 | 0.007 | 0.106 | 0.254 | 0.368 | 0.437 | 0.425 | 0.409 | 0.437 | 0.001 |
| C | 0.011 | 0.440 | 0.009 | 0.007 | 0.104 | 0.278 | 0.372 | 0.412 | 0.452 | 0.390 | 0.514 | 0.011 |
| D | 0.011 | 0.468 | 0.005 | 0.007 | 0.098 | 0.278 | 0.448 | 0.399 | 0.430 | 0.407 | 0.460 | 0.002 |
| E | -0.049 | -0.049 | -0.049 | -0.049 | -0.049 | -0.049 | -0.049 | -0.049 | -0.049 | -0.049 | -0.049 | -0.049 |
| F | -0.049 | -0.049 | 0.052 | -0.049 | -0.049 | -0.049 | -0.049 | -0.049 | -0.049 | -0.049 | -0.049 | -0.049 |
| G | -0.049 | -0.049 | -0.049 | -0.049 | -0.049 | -0.049 | -0.049 | -0.049 | -0.049 | -0.049 | -0.049 | -0.049 |
| H | -0.049 | 0.000 | -0.049 | -0.049 | -0.049 | -0.049 | -0.049 | -0.049 | -0.049 | -0.049 | -0.049 | -0.049 |

| Mean Blank = | 0.055 |
|---|---|

## RELATIVE VIABILITY (% OF VEHICLE CONTROL)

| | 1 | 2 | 3 | 4 | 5 | 6 | 7 | 8 | 9 | 10 | 11 | 12 |
|---|---|---|---|---|---|---|---|---|---|---|---|---|
| A | | | | | | | | | | | | |
| B | | 182.3% | 3.3% | 2.9% | 41.4% | 99.5% | 144.2% | 171.3% | 166.6% | 160.3% | 171.3% | |
| C | | 172.5% | 3.7% | 2.9% | 40.6% | 108.9% | 145.8% | 161.5% | 177.2% | 152.8% | 201.5% | |
| D | | 183.5% | 2.2% | 2.9% | 38.3% | 108.9% | 175.6% | 156.4% | 168.5% | 159.5% | 180.3% | |
| E | | -19.0% | -19.0% | -19.0% | -19.0% | -19.0% | -19.0% | -19.0% | -19.0% | -19.0% | -19.0% | |
| F | | -19.0% | 20.2% | -19.0% | -19.0% | -19.0% | -19.0% | -19.0% | -19.0% | -19.0% | -19.0% | |
| G | | -19.0% | -19.0% | -19.0% | -19.0% | -19.0% | -19.0% | -19.0% | -19.0% | -19.0% | -19.0% | |
| H | | | | | | | | | | | | |

Test Facility : ECBC
Chemical Code : SLS
2nd Chem. Code*: none

Study Number.: ECBC-3T3 Ia 0#
96-Well Plate ID : 090602-2
Experiment ID : SLS-B(50ug NR/ml 3hr)

| | VC1 | C1 | C2 | C3 | C4 | C5 | C6 | C7 | C8 | VC2 |
|---|---|---|---|---|---|---|---|---|---|---|
| Conc. (µg/mL) : | 0.0 | 100.0 | 68.0 | 46.3 | 31.5 | 21.4 | 14.6 | 9.9 | 6.7 | 0.0 |
| Mean Corr. OD : | 0.457 | 0.008 | 0.007 | 0.102 | 0.270 | 0.396 | 0.416 | 0.435 | 0.402 | 0.470 |
| SD : | 0.015 | 0.002 | 0.000 | 0.004 | 0.014 | 0.045 | 0.019 | 0.014 | 0.010 | 0.040 |
| Mean Vehicle Control : | 0.464 | | | | | | | | | |
| Mean Blank : | 0.055 | | | | | | | | | |
| % of Vehicle Control : | 179.4% | 3.1% | 2.9% | 40.1% | 105.8% | 155.2% | 163.0% | 170.8% | 157.6% | 184.4% |
| SD : | 6.0% | 0.8% | 0.0% | 1.6% | 5.4% | 17.7% | 7.6% | 5.6% | 4.1% | 15.5% |
| % CV : | 3.36% | 26.57% | 0.00% | 4.08% | 5.14% | 11.40% | 4.65% | 3.30% | 2.60% | 8.41% |
| Mean VC - VC1 (%) : | 1.37% | | | | | | | | | |
| Mean VC - VC2 (%) : | -1.37% | | | | | | | | | |
| Mean Absolute OD : | 0.512 | | | | | | | | | |

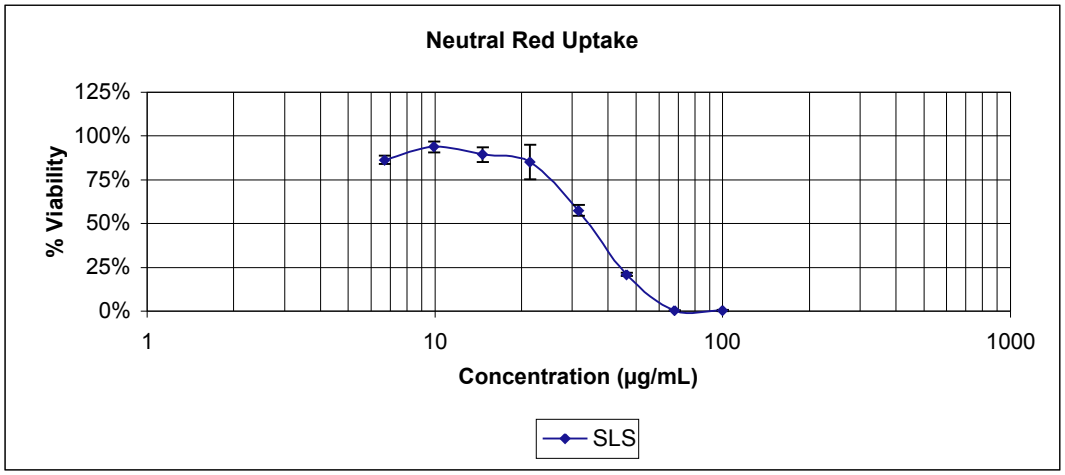

# Appendix F

## Reference Substance Information

**F1 NRU Test Information for the 72 Reference Substances ..... F-3**

**F2 Chemical, Physical, and Biological Information from the Literature for the 72 Reference Substances..... F-11**

**F3 Candidate Reference Substances ..... F-27**

***[This Page Intentionally Left Blank]***

# Appendix F1

## NRU Test Information for the 72 Reference Substances

***[This Page Intentionally Left Blank]***

## Table F-1 NRU Test Information for the 72 Reference Substances

| Chemical | CASRN | Purity (%) | Supplier | pH in 3T3 Medium[a] | Concentrations Tested in 3T3 Assay (µg/mL) | pH in NHK Medium[b] | Concentrations Tested in NHK Assay (µg/mL) |
|---|---|---|---|---|---|---|---|
| Acetaminophen | 103-90-2 | 99 | Sigma | 8.1 | 4.7-1000 | 7.7 | 11.8-4000 |
| Acetonitrile | 75-05-8 | 99.5 | Sigma | 8.4 | 118-100000 | 7.9 | 8.12-200000 |
| Acetylsalicylic acid | 50-78-2 | 99.5 | Sigma | 7.5 | 9.4-2500 | 6.9 | 11.8-2500 |
| Aminopterin | 54-62-6 | 100.3 | Fluka | 8.1 | 0.00005-0.1 | 7.2 | 67.4-1000 |
| 5-Aminosalicylic acid | 89-57-6 | 99 | Sigma | 6.7 | 169-2500 | 7.5 | 2.4-500 |
| Amitriptyline HCl | 549-18-8 | 100 | Sigma | 8.1 | 0.4-100 | 7.6 | 0.24-100 |
| Arsenic III trioxide | 1327-53-3 | 99.9 | Sigma | 7.9 | 0.169-100 | 7.5 | 0.46-100 |
| Atropine sulfate monohydrate | 5908-99-6 | 100 | Fluka | 7.9 | 4.7-1000 | 7.5 | 3.8-10000 |
| Boric aid | 10043-35-3 | 101.1 | Fluka | 7.1 | 4.7-10000 | 7.4 | 28.3-10000 |
| Busulfan | 55-98-1 | 100.2 | Fluka | 8.1 | 2.4-500 | 7.8 | 2.35-800 |
| Cadmium II chloride | 10108-64-2 | 99.8 | Fluka | 8.1 | 0.135-5 | 7.7 | 0.337-100 |
| Caffeine | 58-08-2 | 99.9 | Fluka | 8.3 | 1.6-5000 | 7.8 | 3.25-10000 |
| Carbamazepine | 298-46-4 | > 99 | Sigma | 8.0 | 0.3-1000 | 7.9 | 1.88-1000 |
| Carbon tetrachloride | 56-23-5 | > 99.5 | Sigma-Aldrich | NA | 169-7000 | 7.7 | 11.8-7000 |
| Chloral hydrate | 302-17-0 | 100.1 | Sigma | 8.4 | 4.7-1000 | 7.6 | 4.7-1000 |
| Chloramphenicol | 56-75-7 | > 99 | Fluka | 8.3 | 4.7-2500 | 7.8 | 9.15-2500 |
| Citric acid | 77-92-9 | 98 | Sigma | 2.9 | 23.5-10000 | 4.0 | 23.5-10000 |

## Table F-1 NRU Test Information for the 72 Reference Substances

| Chemical | CASRN | Purity (%) | Supplier | pH in 3T3 Medium[a] | Concentrations Tested in 3T3 Assay (µg/mL) | pH in NHK Medium[b] | Concentrations Tested in NHK Assay (µg/mL) |
|---|---|---|---|---|---|---|---|
| Colchicine | 64-86-8 | > 98 | Fluka | 8.2 | 0 | 7.7 | 0.0014-0.10 |
| Cupric sulfate pentahydrate | 7758-99-8 | 99.7 | Sigma | 7.8 | 0.0059-5.0 | 7.4 | 2.4-750 |
| Cycloheximide | 66-81-9 | 100 | Sigma | 8.0 | 0.01-50 | 7.8 | 0.0040-100 |
| Dibutyl phthalate | 84-74-2 | > 99 | Sigma | 8.0 | 3.7-2500 | 7.7 | 0.9-1000 |
| Dichlorvos | 62-73-7 | 99.5 | Chem Service, Inc. | 8.1 | 0.5-100 | 7.7 | 0.235-500 |
| Diethyl phthalate | 84-66-2 | 99.5 | Aldrich | 8.1 | 4.7-2000 | 7.8 | 2.35-2000 |
| Digoxin | 20830-75-5 | 98.6 | Sigma | 8.2 | 3.5-1000 | 7.8 | 0.0000047-0.100 |
| Dimethylformamide | 68-12-2 | 99.95 | Sigma-Aldrich | 8.1 | 236-50000 | 7.7 | 70.6-30000 |
| Diquat dibromide monohydrate | 6385-62-2 | 99 | Chem Service, Inc. | 7.9 | 0.03-100 | 7.7 | 0.47-500 |
| Disulfoton | 298-04-4 | 99.4 | Chem Service, Inc. | 8.0 | 2.4-2500 | 7.8 | 2.4-2500 |
| Endosulfan | 115-29-7 | 99.5 | Chem Service, Inc. | 8.3 | 0.1-100 | 7.8 | 0.67-50 |
| Epinephrine bitartrate | 51-42-3 | > 99 | Sigma-Aldrich | 7.9 | 6.74-200 | 7.6 | 4.7-1000 |
| Ethanol | 64-17-5 | 100 | Sigma-Aldrich | 8.6 | 1011-50000 | 7.8 | 118-150000 |
| Ethylene glycol | 107-21-1 | 99.99 | Sigma | 8.4 | 1770-100000 | 7.8 | 1770-100000 |
| Fenpropathrin | 39515-41-8 | 91.8 | Valent | 8.3 | 2.4-500 | 7.8 | 0.301-100 |
| Gibberellic acid | 77-06-5 | 99 | Acros | 4.5 | 1348-100000 | 6.5 | 23.6-10000 |
| Glutethimide | 77-21-4 | > 99 | Sigma-Aldrich | 8.0 | 19-1000 | 7.7 | 4.7-1000 |

## Table F-1 NRU Test Information for the 72 Reference Substances

| Chemical | CASRN | Purity (%) | Supplier | pH in 3T3 Medium[a] | Concentrations Tested in 3T3 Assay (µg/mL) | pH in NHK Medium[b] | Concentrations Tested in NHK Assay (µg/mL) |
|---|---|---|---|---|---|---|---|
| Glycerol | 56-81-5 | 99.9 | Sigma | 8.2 | 4586-100000 | 7.8 | 47-101960 |
| Haloperidol | 52-86-8 | 99 | Sigma | 8.3 | 0.1-25 | 7.7 | 0.188-100 |
| Hexachlorophene | 70-30-4 | 99.2 | Sigma-Aldrich | 8.1 | 0.5-100 | 7.5 | 0.002-1 |
| Lactic acid | 50-21-5 | 88.6 | Sigma | 3.2 | 47.1-10000 | 3.0 | 47.1-10000 |
| Lindane | 58-89-9 | 100 | Sigma | 8.1 | 0.8-2500 | 7.7 | 2.35-2000 |
| Lithium I carbonate | 554-13-2 | 99.4 | Sigma | 9.3 | 74.3-1102.5 | 9.5 | 4.7-2000 |
| Meprobamate | 57-53-4 | > 99 | Sigma | 8.1 | 9.4-2500 | 7.7 | 4.71-2500 |
| Mercury II chloride | 7487-94-7 | 99.5 | Sigma | 8.1 | 0.05-10 | 7.6 | 0.67-10 |
| Methanol | 67-56-1 | 99.97 | Sigma-Aldrich | 8.0 | 398-3500 (no toxicity) | 7.6 | 9.42-2500 |
| Nicotine | 54-11-5 | > 99.0 | Fluka | 8.8 | 94.9-1000 | 8.5 | 8.02-5000 |
| Paraquat | 1910-42-5 | 100 | Sigma | 7.9 | 0.5-100 | 7.8 | 2.4-1000 |
| Parathion | 56-38-2 | 98 | Supelco | 8.2 | 0.5-2500 | 7.7 | 0.47-1500 |
| Phenobarbital | 50-06-6 | 100 | Spectrum | 7.7 | 11.8-2500 | 7.4 | 7.06-3000 |
| Phenol | 108-95-2 | > 99 | Sigma | 8.0 | 0.3-1500 | 7.7 | 4.7-1000 |
| Phenylthiourea | 103-85-5 | 98 | Sigma | 8.1 | 0.8-2500 | 7.7 | 9.42-2500 |
| Physostigmine | 57-47-6 | 100 | Sigma | 8.1 | 5.4-200 | 7.7 | 0.32-1000 |
| Potassium I chloride | 7447-40-7 | 100 | Sigma | 8.3 | 163-15000 | 7.8 | 23.5-10000 |

## Table F-1 NRU Test Information for the 72 Reference Substances

| Chemical | CASRN | Purity (%) | Supplier | pH in 3T3 Medium[a] | Concentrations Tested in 3T3 Assay (µg/mL) | pH in NHK Medium[b] | Concentrations Tested in NHK Assay (µg/mL) |
|---|---|---|---|---|---|---|---|
| Potassium cyanide | 151-50-8 | 99.4 | Mallinckrodt Baker | 9.0 | 0.5-1500 | 8.2 | 0.401-500 |
| Procainamide HCl | 51-06-9 | 99.7 | Sigma-Aldrich | 8.3 | 67-1000 | 7.5 | 47-10000 |
| 2-Propanol | 67-63-0 | > 99.9 | Sigma | 8.5 | 1011-50000 | 7.7 | 47.1-20000 |
| Propranolol HCl | 3506-09-0 | 100 | Sigma | 7.9 | 1.78-1000 | 7.4 | 1.8-350 |
| Propylparaben | 94-13-3 | > 99 | Fluka | 8.1 | 2.4-1000 | 7.7 | 0.47-300 |
| Sodium arsenite | 7784-46-5 | > 99.0 | Fluka | 8.0 | 0.05-10.0 | 7.7 | 0.038-30 |
| Sodium chloride | 7647-14-5 | 99.5 | Sigma | 8.2 | 94-20000 | 7.9 | 4.71-10000 |
| Sodium dichromate dihydrate | 7789-12-0 | 100.4 | Sigma | 8.0 | 0.03-10.0 | 7.7 | 0.0318-100 |
| Sodium I fluoride | 7681-49-4 | 100 | Sigma | 8.1 | 10.1-1000 | 7.7 | 0.3-1000 |
| Sodium hypochlorite | 7681-52-9 | 12.9% Cl | Sigma-Aldrich | 8.0 | 24-10000 | 7.7 | 47.1-10000 |
| Sodium oxalate | 62-76-0 | 99.99 | Sigma-Aldrich | 8.1 | 1.2-500 | 7.7 | 40.5-2000 |
| Sodium selenate | 13413-01-0 | 100 | Sigma-Aldrich | 8.2 | 6.8-300 | 7.8 | 0.47-556 |
| Strychnine | 57-24-9 | 99 | Sigma | 8.4 | 9.5-800 | 7.8 | 1.18-500 |
| Thallium I sulfate | 7446-18-6 | 99.995 | Aldrich | 8.3 | 0.1-500 | 7.8 | 0.0047-2 |
| Trichloroacetic acid | 76-03-9 | > 99 | Aldrich | 2.3 | 24-10000 | 1.9 | 33.0-10000 |
| 1,1,1-Trichloroethane | 71-55-6 | 99.78 | Sigma-Aldrich | 8.4 | 1686-50000 | 8.0 | 674-10000 |
| Triethylenemelamine | 51-18-3 | 98 | Acros | 8.0 | 0.02-4 | 7.6 | 0.024-10 |

## Table F-1 NRU Test Information for the 72 Reference Substances

| Chemical | CASRN | Purity (%) | Supplier | pH in 3T3 Medium[a] | Concentrations Tested in 3T3 Assay (μg/mL) | pH in NHK Medium[b] | Concentrations Tested in NHK Assay (μg/mL) |
|---|---|---|---|---|---|---|---|
| Triphenyltin hydroxide | 76-87-9 | ~ 99.5 | Sigma-Aldrich | 8.0 | 0.0002-0.1 | 7.6 | 0.005-0.1 |
| Valproic acid | 99-66-1 | 100 | Sigma | 6.9 | 12-2500 | 6.0 | 11.8-2500 |
| Verapamil HCl | 152-11-4 | 98 | Sigma-Aldrich | 8.1 | 3.4-100 | 7.5 | 3.8-1500 |
| Xylene | 1330-20-7 | 99.9 | Mallinckrodt Baker | 6.8 | 398-2500 | 7.5 | 190-2000 |

Abbreviations:NRU=Neutral red uptake; CASRN=Chemical Abstracts Service Registry Number; 3T3=BALB/c 3T3 fibroblasts; NHK=Normal human epidermal keratinocytes; pH=Mean pH of the highest concentration tested (of all acceptable NRU tests)
[a]3T3 Medium - Dulbecco's Modification of Eagle's Medium, with supplements.
[b]NHK medium - Keratinocyte Growth Medium (KGM® from Cambrex).
.

***[This Page Intentionally Left Blank]***

# Appendix F2

## Chemical, Physical, and Biological Information from the Literature for the 72 Reference Substances

***[This Page Intentionally Left Blank]***

## Table F-2 Chemical, Physical, and Biological Information from the Literature for the 72 Reference Substances

| Chemical | CASRN | $LD_{50}$ (mg/kg)[a] | MW (g/mol) | Chemical Class[b] | Water Solubility[c] | pK[d] | log Kow[c] | Boiling Point (°C)[d] | Toxic Effect Class[f] | Passage of Blood: Brain Barrier[g] | Metabolic Activation/ Inactivation[f] | Mechanism of Lethaliy[f] |
|---|---|---|---|---|---|---|---|---|---|---|---|---|
| Acetaminophen | 103-90-2 | 2404 | 151.20 | Organic compound; Amide | Slightly in cold, much more in hot; 1-5 mg/mL @ 22°C | NA | 0.8 | NA | Liver toxin | Free? | More toxic intracellular metabolites | Covalent NAPQI binding and lipid peroxidation. |
| Acetonitrile | 75-05-8 | 3798 | 41.05 | Organic compound; Nitrile | Miscible; ≥100 mg/mL @ 22.5°C | -4.30 | -0.34 | 81.6 | CNS stimulant | Presumed | Must be metabolized to hydrogen cyanide for effect. | Assumed to be same as cyanide: General enzyme inhibition. High affinity for $Fe^{+++}$. Inhibits cell respiration by inhibition of cytochrome oxidase; solvent |
| Acetylsalicylic acid | 50-78-2 | 1000 | 180.20 | Organic compound; Carboxylic acid; Phenol | 3.3 mg/mL @ 25°C; 4.6 mg/mL @ 25°C; <1 mg/mL @ 23°C | 3.49@ 25°C | 1.19 | NA | Gastric irritant, CNS (encephalo-pathy), kidney toxin | Restricted | Salicylic acid is an active metabolite | General cell poison, works by uncoupling oxidation phosphorylation and inhibition of Kreb's cycle dehydrogenases. |
| Aminopterin | 54-62-6 | 3 (mouse) | 476.45 | Organic compound; Heterocyclic compound | NA | 5.5 | NA | NA | Hematotoxin | Presumed to be minimal (like methotrexate) | Not expected to require metabolism for toxicity | Hypothetical: Inhibits folic acid utilization and thus cell proliferation. |
| 5-Aminosalicylic acid | 89-57-6 | 7749 (mouse) | 153.10 | Organic compound; Carboxylic acid; Phenol | 2 mg/mL; <1 mg/mL @ 21°C | 3.25 | 1.32 | NA | Kidney toxin | Yes | Not activated | Unknown |
| Amitriptyline HCl | 549-18-8 | 319 | 313.90 | Organic compound; Polycyclic compound | 0.0097 mg/mL @ 24°C/HCl is freely soluble | 9.4 | 5.04 | NA | Cardiotoxin | Free | Nortriptyline, a metabolite, also active | Hypothetical: Blocks norepinephrine, 5-hydroxytryptamine, and dopamine presynaptic uptake; prevents reuptake of heart norepinephrine. |

## Table F-2 Chemical, Physical, and Biological Information from the Literature for the 72 Reference Substances

| Chemical | CASRN | $LD_{50}$ (mg/kg)[a] | MW (g/mol) | Chemical Class[b] | Water Solubility[c] | pK[d] | log Kow[c] | Boiling Point (°C)[d] | Toxic Effect Class[f] | Passage of Blood: Brain Barrier[g] | Metabolic Activation/ Inactivation[f] | Mechanism of Lethaliy[f] |
|---|---|---|---|---|---|---|---|---|---|---|---|---|
| Arsenic III trioxide | 1327-53-3 | 20 | 197.80 | Inorganic compound; Arsenical | sparingly in cold; in 15 parts boiling; 17 mg/mL @ 16°C | NA | NA | 465 | CNS toxin (encephalo-pathy) | Restricted | No | Cellular poison. Multisystem failure due to uncoupling oxidative phosphorylation & inhibition of pyruvate and succinate oxidative pathways; Apoptosis induction; angiogenesis inhibition; cellular growth inhibition |
| Atropine sulfate monohydrate | 5908-99-6 | 623 | 694.80 | Organic compound; Heterocyclic compound | 2.2 mg/mL | NA | 1.83 | NA | CNS stimulant | Free | No | Antimuscarinic, anticholinergic action. Competitive antagonism of anticholinesterase at cardiac & CNS receptor sites. |
| Boric aid | 10043-35-3 | 2660 | 61.83 | Inorganic compound; Boron compound; Acids | 56 mg/mL in cold water; 10-50 mg/mL @ 19°C | NA | NA | 300 | Skin, kidney, liver, testicular toxin | Yes | No | Inhibits enzymes involved in metabolism and RNA synthesis.[g] |
| Busulfan | 55-98-1 | 2 | 246.31 | Organic compound; Alcohol; Acyclic hydrocarbon; Sulfur compound | Decomposes | NA | -0.52 | NA | Hematotoxin | Freely (similar to plasma concentration[h] | Reactive intermediates[h] | Hypothetical: Alkylation of sufhydryl groups[i]; antineoplastic |
| Cadmium II chloride | 10108-64-2 | 88 | 183.31 | Organic compound; Cadmium compound | 1400 mg/mL @ 20°C; ≥100 mg/mL @ 20°C | NA | NA | 960 | Kidney, liver toxin, corrosive | Yes[j] | No | Alters $Ca^{++}$ translocation, affects membrane ATPase & mitochondrial respiration. |

## Table F-2 Chemical, Physical, and Biological Information from the Literature for the 72 Reference Substances

| Chemical | CASRN | $LD_{50}$ (mg/kg)[a] | MW (g/mol) | Chemical Class[b] | Water Solubility[c] | pK[d] | log Kow[c] | Boiling Point (°C)[d] | Toxic Effect Class[f] | Passage of Blood: Brain Barrier[g] | Metabolic Activation/ Inactivation[f] | Mechanism of Lethaliy[f] |
|---|---|---|---|---|---|---|---|---|---|---|---|---|
| Caffeine | 58-08-2 | 192 | 194.20 | Organic compound; Heterocyclic compound | 21 mg/mL @ 25°C; 10-50 mg/mL @ 23°C | 14 @ 25°C; $pK_b$=14 .15 @ 19°C | -0.07 | 17 (sublimes) | CNS stimulant | Free | No | Hypothetical: Inhibition of phosphodiesterase leading to AMP accumulation. Translocation of intracellular $Ca^{++}$? Adenosine receptor antagonism?; neurotoxic |
| Carbamazepine | 298-46-4 | 1957 | 236.30 | Organic compound; Heterocyclic compound | Practically insoluble | NA | 2.45 | NA | CNS depressant, hematotoxin | Free | 10,11-epoxide metabolite as active as parent | Not known. Therapeutically decreases firing of noradrenergic neurons. |
| Carbon tetrachloride | 56-23-5 | 2799 | 153.82 | Organic compound; Halogenated hydrocarbon | 0.793 mg/mL at 25°C; <1 mg/mL @ 21°C | NA | 2.83 | 76.8 | Liver, kidney toxin, CNS depressant | Free | More toxic intracellular metabolites? | Hypothetical: Covalent binding of toxic intracellular metabolites. Free radicals inducing lipid peroxidation? |
| Chloral hydrate | 302-17-0 | 479 | 165.40 | Organic compound; Alcohol | 9310 mg/mL @ 25°C; ≥10 mg/mL @ 20.5°C | NA | 0.99 | 96 | CNS depressant & cardiotoxin | Freely | Active metabolite trichloroethanol is partly[f] or totally[k] responsible for CNS effect | Proposed: potentiation of $GABA_A$ receptor activity, inhibition of N-methyl-D-aspartate activity, & modulation of 5-hydroxytryptamine$_3$ receptor-mediated depolarization of the vagas nerve.[k] |
| Chloramphenicol | 56-75-7 | 3393 | 323.14 | Organic compound; Alcohol; Cyclic hydrocarbon; Nitro compound | 2.5 mg/mL @ 25°C | NA | 1.14 | NA | Hematotoxin | Free | No | Hypothetical: Binds to mitochondrial ribosomes & inhibits enzyme syntheses (e.g., those necessary for oxidative phosphorylation) |

## Table F-2 Chemical, Physical, and Biological Information from the Literature for the 72 Reference Substances

| Chemical | CASRN | $LD_{50}$ (mg/kg)[a] | MW (g/mol) | Chemical Class[b] | Water Solubility[c] | pK[d] | log Kow[c] | Boiling Point (°C)[d] | Toxic Effect Class[f] | Passage of Blood: Brain Barrier[g] | Metabolic Activation/ Inactivation[f] | Mechanism of Lethaliy[f] |
|---|---|---|---|---|---|---|---|---|---|---|---|---|
| Citric acid | 77-92-9 | 3000 | 192.10 | Organic compound; Carboxylic acid | 592 mg/mL @ 20°C; ≥100 mg/mL @ 22°C | 1=3.128 2=4.761 3=6.396 @ 25°C | -1.72 | decomposes | Acidosis | NA | NA | NA |
| Colchicine | 64-86-8 | 6 (mouse) | 399.45 | Organic compound; Polycyclic compound | 45 mg/mL; ≥100 mg/mL @ 21°C | pK=12.35 @ 20°C; pKa=1.7 & 12.4 | 1.03 | | GI, liver, kidney, hemato-, PNS toxin | No | Not expected | Depresses respiratory center. |
| Cupric sulfate pentahydrate | 7758-99-8 | 300 | 249.70 | Inorganic compound; Sulfur compound; Metal | 148 & 316 mg/mL @ 0°C; 2033 mg/mL @ 100°C; 230.5 mg/mL @ 25°C; 32 mg/mL @ 20°C; ≥100 mg/mL @ 21°C | NA | NA | decomposes @ 150°C | Liver, kidney toxin | Restricted | No | Hypothetical: Copper is reduced by thiol groups in cell membranes. superoxide is formed by reoxidation of copper, inducing lipid peroxidation. |
| Cycloheximide | 66-81-9 | 2 | 281.40 | Organic compound; Heterocyclic compound | 21 mg/mL @ 2°C; 10-50 mg/mL @ 20°C | NA | 0.55 | NA | Liver toxin | Unknown | Metabolically activated | Inhibition of protein synthesis?; metabolic inhibitor |
| Dibutylphthalate | 84-74-2 | 11998 | 278.30 | Organic compound; Carboxylic acid | 0.013 mg/mL @ 25°C; 0.01 mg/mL @ 20°C; <1 mg/mL @ 20°C | NA | 4.9 | 340 | CNS depressant; pulmonary, liver, testicular toxin | Yes[p] | Monobutyl metabolite has greater toxicity than parent in rats | Peroxisome proliferator[u] |
| Dichlorvos | 62-73-7 | 17 | 220.98 | Organic compound; Organophos-phorous compound | 10 mg/mL @ 20°C; 5 g/mL; 10-50 mg/mL @ 20°C | NA | 1.43, 1.45 | 245; 140 @ 20 mmHg | CNS depressant | Assumed due to CNS effects | Rapidly inactivated by hepatic metabolism | Inhibition of acetylcholinesterase resulting in acetylcholine accumulation in CNS & effector organs; irreversible cholinesterase inhibitor |

## Table F-2 Chemical, Physical, and Biological Information from the Literature for the 72 Reference Substances

| Chemical | CASRN | $LD_{50}$ (mg/kg)[a] | MW (g/mol) | Chemical Class[b] | Water Solubility[c] | pK[d] | log Kow[c] | Boiling Point (°C)[d] | Toxic Effect Class[f] | Passage of Blood: Brain Barrier[g] | Metabolic Activation/ Inactivation[f] | Mechanism of Lethaliy[f] |
|---|---|---|---|---|---|---|---|---|---|---|---|---|
| Diethyl phthalate | 84-66-2 | 8602 | 222.20 | Organic compound; Carboxylic acid | <1 mg/mL @ 19°C and 25°C | NA | 2.47 | 298 | CNS depressant, liver toxin | Yes[m] | Monoethyl metabolite has greater toxicity than parent in rats | Peroxisome proliferator[u] |
| Digoxin | 20830-75-5 | 18 (mouse) | 780.90 | Organic compound; Polycyclic compound; Carbohydrate | 0.0648 mg/mL @ 25°C | NA | 1.26 | NA | Cardiotoxin | Restricted | Also active metabolites | Impairs ion transport & increases sarcoplasmic calcium by binding to $Na^+/K^+$ ATPase, increasing automaticity of cardiac cells. |
| Dimethylformamide | 68-12-2 | 2800 | 73.10 | Organic compound; Amide | Miscible; ≥100 mg/mL @ 22°C | -0.01 @ -20°C | -1.01 | 153 | Liver, kidney toxin | NA | NA | Hepatocellular necrosis[u] |
| Diquat dibromide monohydrate | 6385-62-2 | 231 | 362.10 | Organic compound; Heterocyclic compound | 700 mg/mL @ 20°C; ≥100 mg/mL @ 20°C | NA | -3.05 | NA | GI, pulmonary, liver, kidney toxin | Free[n] | No[n] | Assumed to be same as Paraquat; Hypothetical: Multisystem failure due to depletion of superoxide dismutase, formation of free radicals & lipid peroxidation. Lung fibrosis due to accumulation. |
| Disulfoton | 298-04-4 | 2 | 274.42 | Organic compound; Organo-phosphorous compound; Sulfur compound | 0.012 mg/mL @ 20°C | NA | 4.02 | 132-33 @ 1.5 mmHg; 108 and 62 @ 0.01 mmHg | CNS depressant | Yes | More toxic metabolites | Inhibition of acetylcholinesterase resulting in acetylcholine accumulation in CNS & effector organs; irreversible cholinesterase inhibitor |
| Endosulfan | 115-29-7 | 18 | 406.91 | Organic compound; Heterocyclic compound; Sulfur compound | 0.00053 mg/mL @ 25°C | NA | 3.83 | 106 @ 0.7 mm, partial decom-position | CNS depressant | Yes[o] | No[o] | Affects brain neurotransmitter levels.[o] |

## Table F-2 Chemical, Physical, and Biological Information from the Literature for the 72 Reference Substances

| Chemical | CASRN | $LD_{50}$ (mg/kg)[a] | MW (g/mol) | Chemical Class[b] | Water Solubility[c] | pK[d] | log Kow[c] | Boiling Point (°C)[d] | Toxic Effect Class[f] | Passage of Blood: Brain Barrier[g] | Metabolic Activation/ Inactivation[f] | Mechanism of Lethaliy[f] |
|---|---|---|---|---|---|---|---|---|---|---|---|---|
| Epinephrine bitartrate | 51-42-3 | 4 (mouse) | 333.30 | Organic compound; Alcohol; Amine | 1 mg/mL @ 25°C; < 0.1 mg/mL @ 18°C (for base) | NA | -1.52 | NA | Cardiovascular toxin | No | Large first pass metabolism to inactive metabolites | Adrenergic receptor stimulation. |
| Ethanol | 64-17-5 | 14008 | 46.07 | Organic compound; Alcohol | >10% why include; ≥ 100 mg/ml @ 23°C | 15.9 @ 25°C | -0.31 | 78.5 | CNS depressant | Free | Acetaldehyde, active metabolite | Hypothetical: Interferes with cell membrane fluidity, perturbing proteins such as ion channels. Depression of postsynaptic potentials in CNS; solvent |
| Ethylene glycol | 107-21-1 | 8567 | 62.07 | Organic compound; Alcohol | Miscible; ≥ 100 mg/mL @ 17.5°C | NA | -1.36 | 197.6 @ 760 mmHg | CNS depressant, kidney toxin | Free | Glyoxalate, glycolate, & oxalate, active metabolites | Hypothetical: Metabolites inhibit mitochondria to produce metabolic acidosis. Oxalate decreases sarcoplasmic $Ca^{++}$; affects kidney function; oxalic acid is toxic metabolite |
| Fenpropathrin | 39515-41-8 | 18 | 349.43 | Organic compound; Nitrile; Ester; Ether | 0.00033 mg/mL @ 25°C | NA | 6.0 @ 20°C | 377 | PNS toxin | Yes[p] | Rapidly hydrolyzed to inactive products in mammals[e,p] | Delays closure of sodium channel causing persistent depolarization of membrane. |
| Gibberellic acid | 77-06-5 | 6305 | 346.38 | Organic compound; Polycyclic compound | 5 mg/mL; slightly | 4 | 0.24 | NA | NA | NA | NA | NA |
| Glutethimide | 77-21-4 | 600 | 217.30 | Organic compound; Heterocyclic compound | Practically insoluble | 4.2 | 1.9 | NA | CNS depressant | Presumed | 2X active metabolite: 4-hydroxyglu-thethimide | CNS depression; anticholinergic activity |
| Glycerol | 56-81-5 | 12691 | 92.09 | Organic compound; Alcohol | Soluble in all proportions; ≥ 100 mg/mL @ 18 °C | 14.4 | -1.76 | 182; 290 @ 760 mmHg, decomposes | Body fluids | No evidence found | No | Cellular dehydration; osmotic effect |

## Table F-2 Chemical, Physical, and Biological Information from the Literature for the 72 Reference Substances

| Chemical | CASRN | $LD_{50}$ (mg/kg)[a] | MW (g/mol) | Chemical Class[b] | Water Solubility[c] | pK[d] | log Kow[c] | Boiling Point (°C)[d] | Toxic Effect Class[f] | Passage of Blood: Brain Barrier[g] | Metabolic Activation/ Inactivation[f] | Mechanism of Lethaliy[f] |
|---|---|---|---|---|---|---|---|---|---|---|---|---|
| Haloperidol | 52-86-8 | 128 | 375.90 | Organic compound; Ketone | 0.014 mg/mL | 8.3 | 3.36 | NA | CNS depressant | Presumed | No | Blocks dopamine receptors |
| Hexachlorophene | 70-30-4 | 61 | 406.91 | Organic compound; Cyclic hydrocarbon; Phenol | 0.140 mg/mL @ 25 °C; < 1 mg/mL @ 20 °C | 4.95 | 6.91 | NA | CNS depressant | Restricted | No | Hypothetical: Uncoupling of oxidative phosphorylation. Binding to proteins in cytoplasmic membrane & cell organelles. |
| Lactic acid | 50-21-5 | 3730 | 90.08 | Organic compound; Carboxylic acid | Soluble | 3.86 @ 25 °C | -0.72 | 122 @ 14-15 mmHg | Acidosis, corrosive | Yes[g] | Unknown | Disturbance of metabolism (lactic acidosis). |
| Lindane | 58-89-9 | 76 | 290.80 | Organic compound; Halogenated hydrocarbon | 0.0073 mg/mL @ 25 °C; < 1 mg/mL @ 24 °C | NA | 3.72 | 323.4 @ 760 mmHg | CNS stimulant | Free | No? | CNS depression through inhibition of GABA receptor linked chloride channel at the picrotoxin binding site, leading to blockade of chloride influx into neurons? |
| Lithium I carbonate | 554-13-2 | 1187 (sulfate salt; mouse) | 73.89 | Inorganic compound; Lithium compound; Alkalies; Inorganic carbon compound | 1.5 mg/mL @ 0 °C; 1.3 mg/mL @ 20 °C; 1.2 mg/mL @ 40 °C; 12.2 mg/mL cold; 7 mg/mL hot | NA | NA | NA | CNS depressant | Restricted (assumed same as lithium sulfate) | No | Unknown: Partial substitution for normal cations of cells may disturb energy processes? |
| Meprobamate | 57-53-4 | 794 | 218.30 | Organic compound; Carboxylic acid | 3.4 mg/mL @ 20 °C; 7.9 mg/mL @ 37 °C; < 1 mg/mL @ 20 °C | 9.2 | NA | NA | CNS depressant cardiotoxin | NA | Rapidly inactivated by hepatic metabolism | Unknown |

## Table F-2 Chemical, Physical, and Biological Information from the Literature for the 72 Reference Substances

| Chemical | CASRN | $LD_{50}$ (mg/kg)[a] | MW (g/mol) | Chemical Class[b] | Water Solubility[c] | pK[d] | log Kow[c] | Boiling Point (ºC)[d] | Toxic Effect Class[f] | Passage of Blood: Brain Barrier[g] | Metabolic Activation/ Inactivation[f] | Mechanism of Lethaliy[f] |
|---|---|---|---|---|---|---|---|---|---|---|---|---|
| Mercury II chloride | 7487-94-7 | 1 | 271.50 | Inorganic compound; Mercury compound; Chlorine compound | 69 mg/mL at 20˚C; 5-50 mg/mL @ 22˚C | NA | 0.22 | 302 | Corrosive, kidney toxin | Restricted | No | Hypothetical: Changes membrane potentials & blocks enzyme reactions in cells by targeting the sulfhydryl part of active sites of some enzymes. |
| Methanol | 67-56-1 | 13012 | 32.04 | Organic compound; Alcohol | Completely miscible at 20˚C; ≥100 mg/mL @ 21˚C | 15.3 | -0.77 | 64.7 @ 760 mmHg | CNS depressant | Free | Active metabolites: formadehyde, formic acid | Hypothetical: Accumulation of formic acid leads to metabolic acidosis. Lactate inhibits mitochondrial respiration; formaldehyde metabolite |
| Nicotine | 54-11-5 | 50 | 162.20 | Organic compound; Heterocyclic compound | Miscible below 60˚C | $pK_{b1}$=6.16 @ 15˚C; $pK_{b2}$=10.96 | 1.17 | 247 | CNS stimulant | Free | No | CNS nicotinic receptor; cholinergic block causing polarization of CNS and PNS synapses. |
| Paraquat | 1910-42-5 | 58 | 257.20 | Organic compound; Heterocyclic compound | Soluble; ≥100 mg/mL @ 19˚C | NA | -4.22 @ pH 7.4 | 175-180 @ 760 mmHg, decomposes | Pulmonary toxin | Free? | No | Multisystem failure due to depletion of superoxide dismutase, with formation of free radicals & lipid peroxidation. Lung fibrosis due to accumulation; interferes with ATP synthesis. |
| Parathion | 56-38-2 | 2 | 291.28 | Organic compound; Organo-phosphorous compound; Sulfur compound | 0.011 mg/mL @ 20˚C; <1 mg/mL @ 23˚C | NA | 3.83 | 375 @ 760 mm Hg | CNS depressant | Free (assumed the same as malathion) | Paraoxon is active metabolite. | Inhibition of acetylcholinesterase resulting in acetylcholine accumulation in CNS & effector organs; irreversible cholinesterase inhibitor |

## Table F-2 Chemical, Physical, and Biological Information from the Literature for the 72 Reference Substances

| Chemical | CASRN | $LD_{50}$ (mg/kg)[a] | MW (g/mol) | Chemical Class[b] | Water Solubility[c] | pK[d] | log Kow[c] | Boiling Point (°C)[d] | Toxic Effect Class[f] | Passage of Blood: Brain Barrier[g] | Metabolic Activation/ Inactivation[f] | Mechanism of Lethaliy[f] |
|---|---|---|---|---|---|---|---|---|---|---|---|---|
| Phenobarbital | 50-06-6 | 163 | 232.23 | Organic compound; Heterocyclic compound | 1 mg/mL; 1.3 mg/mL at 25°C; <0.1 mg/mL @ 14°C | $pK_1$=7.3, $pK_2$=11.8 | 1.47 | NA | CNS depressant | Free | No | Neurotoxic; CNS depression through inhibition of GABA synapses? Inhibits hepatic NADH cytochrome oxidoreductase; |
| Phenol | 108-95-2 | 414 | 94.11 | Organic compound; Phenol | 67 mg/mL; 82.8 mg/mL @ 25°C; 93 mg/mL @ 25°C; 50-100 mg/mL @ 19°C | NA | 1.46 | 182 @ 760 mm Hg | Corrosive; CNS depressant | Free | No | General protoplasmic poison that denatures proteins; depresses vasomotor center |
| Phenylthiourea | 103-85-5 | 3.0 | 152.20 | Organic compound; Sulfur compound; Urea | 2.5 mg/mL @ 25°C; <1 mg/mL @ 21°C | NA | 0.71 | NA | Pulmonary toxin | NA | Humans & animals have high capacity to detoxify sulfides | Destroys cytochrome p450; interferes with pulmonary, thyroid functions. |
| Physostigmine | 57-47-6 | 4.5 | 275.40 | Organic compound; Carboxylic acid; Heterocyclic compound | Slightly soluble | NA | NA | NA | CNS depressant | Easily | None known | Inhibition of acetylcholinesterase resulting in acetylcholine accumulation in CNS & effector organs. |
| Potassium I chloride | 7447-40-7 | 2602 | 74.55 | Inorganic compound; Potassium compound; Chlorine compound | 342 mg/mL @ 20°C; >100 mg/mL @ 20°C | NA | NA | 1500 | Cardiotoxin | Free? | No | Essential cellular electrolyte maintains normal transmembrane potential, necessary for heart conduction. |
| Potassium cyanide | 151-50-8 | 10 | 65.12 | Inorganic compound; Potassium compound; Nitrogen compound | 500 mg/mL cold; 1000 mg/mL hot | NA | NA | NA | CNS stimulant, corrosive | Free | No | General enzyme inhibition. Interferes with ATP synthesis. High affinity for $Fe^{+++}$. Inhibits cell respiration by inhibition of cytochrome oxidase. |
| Procainamide HCl | 51-06-9 | 1950 | 271.79 | Organic compound; Carboxylic | Freely soluble | NA | NA | NA | CNS depressant, cardiotoxin | Some | Less potent[r]; active metabolite[c] | Slows impulse conduction in the heart?[r] |

## Table F-2 Chemical, Physical, and Biological Information from the Literature for the 72 Reference Substances

| Chemical | CASRN | $LD_{50}$ (mg/kg)[a] | MW (g/mol) | Chemical Class[b] | Water Solubility[c] | pK[d] | log Kow[c] | Boiling Point (°C)[d] | Toxic Effect Class[f] | Passage of Blood: Brain Barrier[g] | Metabolic Activation/ Inactivation[f] | Mechanism of Lethaliy[f] |
|---|---|---|---|---|---|---|---|---|---|---|---|---|
| | | | | acid; Amide | | | | | | | | |
| 2-Propanol | 67-63-0 | 5843 | 60.10 | Organic compound; Alcohol | ≥100 mg/mL @ 22°C | NA | 0.05 | 82.3 | CNS depressant | Free | No. | CNS depression through membrane effects[u] |
| Propranolol HCl | 350-60-90 | 470 (mouse) | 295.80 | Organic compound; Alcohol; Amine; Polycyclic compound | Soluble | NA | 3.09 | NA | Cardiotoxin | Free | No? | Unknown: Beta-adrenergic blockade? |
| Propylparaben | 94-13-3 | 6326 (mouse) | 180.20 | Organic compound; Carboxylic acid; Phenol | 0.463 mg/mL @ 25°C; <1 mg/mL @ 12°C | NA | 3.04 | NA | CNS depressant | NA | NA | NA |
| Sodium arsenite | 7784-46-5 | 41 | 129.90 | Inorganic compound; Arsenical; Sodium compound | Very to freely soluble | NA | NA | NA | PNS, liver, hematotoxin | Yes | Not expected | Assumed the same as arsenic trioxide - causes multisystem failure due to uncoupling of oxidative phosphorylation & inhibition of pyruvate & succinate oxidative pathways. |
| Sodium chloride | 7647-14-5 | 2998 | 58.44 | Inorganic compound; Sodium compound; Chlorine compound | 357 mg/mL @ 0°C; 391.2 mg/mL @ 100°C | NA | NA | 1413°C | Body fluids | Restricted | No | Acute dehydration of brain cells caused by osmotic shift of water to the outside of the blood:brain barrier. |
| Sodium dichromate dihydrate | 7789-12-0 | 50 | 298.00 | Inorganic compound; Sodium compound; Chromium compound | 2380 mg/mL @ 0°C | NA | NA | decomposes @ 400 | Kidney, liver toxin | Yes[s] | Less active in presence of metabolizing system | Inhibition of respiratory chain activity; carcinogenic |

## Table F-2 Chemical, Physical, and Biological Information from the Literature for the 72 Reference Substances

| Chemical | CASRN | $LD_{50}$ (mg/kg)[a] | MW (g/mol) | Chemical Class[b] | Water Solubility[c] | pK[d] | log Kow[c] | Boiling Point (°C)[d] | Toxic Effect Class[f] | Passage of Blood: Brain Barrier[g] | Metabolic Activation/ Inactivation[f] | Mechanism of Lethaliy[f] |
|---|---|---|---|---|---|---|---|---|---|---|---|---|
| Sodium I fluoride | 7681-49-4 | 180 | 41.99 | Inorganic compound; Sodium compound; fluorine compound | 43 mg/mL @ 25˚C; 10-50 mg/mL @ 23˚C | NA | NA | NA | GI irritant, CNS depressant | Restricted | No | Hypothetical: Protoplasmic poison interfering with many enzymes. May lower sarcoplasmic $Ca^{++}$ & induce $K^{+}$ efflux from cells. |
| Sodium hypochlorite | 7681-52-9 | 8910 | 74.44 | Inorganic compound; Sodium compound; Oxygen compound; chlorine compound | 293 mg/mL @ 0˚C | NA | NA | 111 | Corrosive, body fluids | NA | NA | NA |
| Sodium oxalate | 62-76-0 | 155 | 134.00 | Organic compound; Carboxylic acid | 220 mg/mL @ 25˚C | NA | NA | NA | Corrosive, body fluids, kidney & cardiotoxin, CNS depressant | Restricted | No | Hypothetical: $Ca^{++}$-complexing action, depressing the level of ionized $Ca^{++}$ in body fluids, but doesn't explain action on GI, vasculature, & kidney. Corrosivity not due to acidity. |
| Sodium selenate | 13413-01-0 | 1.6 | 188.90 | Inorganic compound; Sodium compound; Selenium compound | ≥ 100 mg/mL @ 21˚C | NA | NA | NA | Liver, kidney toxin | Yes[t] | Not expected | Inactivates sulfhydryl enzymes for oxidative reactions in cellular respiration.[t] |
| Strychnine | 57-24-9 | 2 | 334.40 | Organic compound; Heterocyclic compound | 0.16 mg/mL @ 25˚C | 8.26 @ 25˚C | 1.93 | 270 @ 5 mmHg | CNS stimulant | Expected | No | Increases glutamic acid in the CNS. Alkaloid poison. |

## Table F-2 Chemical, Physical, and Biological Information from the Literature for the 72 Reference Substances

| Chemical | CASRN | $LD_{50}$ (mg/kg)[a] | MW (g/mol) | Chemical Class[b] | Water Solubility[c] | pK[d] | log Kow[c] | Boiling Point (°C)[d] | Toxic Effect Class[f] | Passage of Blood: Brain Barrier[g] | Metabolic Activation/ Inactivation[f] | Mechanism of Lethaliy[f] |
|---|---|---|---|---|---|---|---|---|---|---|---|---|
| Thallium I sulfate | 7446-18-6 | 29 (mouse) | 504.80 | Inorganic compound; Metal; Sulfur compound | 48.7 mg/mL @ 15°C; 191.4 mg/mL @ 100°C | NA | NA | NA | GI irritant, CNS toxin (encephalo-pathy) | Restricted | No | Hypothetical: Enzyme inhibition by binding sulfhydryl groups of mitochondrial membranes. Interferes with oxidative phosphorylation by inhibition of $Na^+/K^+$ ATPase. |
| Trichloroacetic acid | 76-03-9 | 4999 | 163.40 | Organic compound; Carboxylic acid | 10 g/mL @ 25°C; 1200 mg/mL @ 25°C; 13.06 g/mL @ 25°C; ≥100 mg/mL @ 22°C | NA | 1.33 | 196 | GI corrosion, acidosis | Expected | Not expected | Corrosive; possible carcinogen |
| 1,1,1-Trichloroethane | 71-55-6 | 10298 | 133.41 | Organic compound; Halogenated hydrocarbon | 4.4 mg/mL @ 20°C; <1 mg/mL @ 20°C | NA | 2.49 | 76 | CNS depressant; liver toxin | Free | No. | Arrhythmogenic[u] |
| Triethylenemelamine | 51-18-3 | 1.0 | 204.23 | Organic compound; Heterocyclic compound | 400 mg/mL @ 26°C; <1 mg/mL @ 16°C | NA | -0.54 | 139 (decomposes) | Hemato-, liver, kidney toxin | Unknown | Expected since it's an alkylator | Genotoxic; binds with DNA; alkylating agent; alkylates proteins |
| Triphenyltin hydroxide | 76-87-9 | 44 | 367.02 | Organic compound; Organo-metallic compound | 0.0012 mg/mL; <1 mg/mL @ 21°C | NA | NA | NA | CNS toxin (encephalo-pathy), skin & GI irritant | Rapidly | No | Affects a number of enzymes involved in cellular energy production and use. Affects immune system; causes lymphopenia; clastogenic |
| Valproic acid | 99-66-1 | 670 (mouse) | 144.20 | Organic compound; Carboxylic acid; Lipids | 2 mg/mL @ 20°C; 1.27 mg/mL; <1 mg/mL @ 22°C | NA | 2.75 | 220 | CNS depressant, liver toxin | Yes | Some metabolites may be active | Increases GABA in the CNS? |

## Table F-2 Chemical, Physical, and Biological Information from the Literature for the 72 Reference Substances

| Chemical | CASRN | $LD_{50}$ (mg/kg)[a] | MW (g/mol) | Chemical Class[b] | Water Solubility[c] | pK[d] | log Kow[c] | Boiling Point (°C)[d] | Toxic Effect Class[f] | Passage of Blood: Brain Barrier[g] | Metabolic Activation/ Inactivation[f] | Mechanism of Lethaliy[f] |
|---|---|---|---|---|---|---|---|---|---|---|---|---|
| Verapamil HCl | 152-11-4 | 108 | 491.08 | Organic compound; Amine | 70 mg/mL | NA | 3.79 | NA | Cardiotoxin | Restricted? | Also active metabolites | Inhibition of transmembrane $Ca^{++}$ flux in excitatory tissues. Cardiac-$Ca^{++}$ channel blocker. Also alpha-adrenergic blockade. |
| Xylene | 1330-20-7 | 4300 | 106.17 | Organic compound; Cyclic hydrocarbon | Practically insoluble; <1 mg/mL @ 22°C | NA | 3.12-3.2 | 136-140 | CNS depressant | Free | No | Unknown: Heart failure caused by sensitization of heart to catecholamines?; solvent |

Abbreviations: MW=Molecular weight; NA=No information found; NADPQI=N-acetyl-*p*-benzoquinoneimine; CNS=Central nervous system; AMP=Adenosine monophosphate; GABA=Gamma aminobutyric acid; GI=Gastrointestinal; PNS=Peripheral nervous system; NADH=Nicotine adenine dinucleotide (reduced).

[a]$LD_{50}$ data from Registry of Cytotoxicity (Halle 1998), Hazardous Substances Data Bank (NLM 2001, 2002), or Registry of Toxic Effects of Chemical Substances® (MDL information Systems 2001, 2002). Rat data unless otherwise noted. Rounded to the nearest one.

[b]Based on the Medical Subject Heading [MeSH] index (NLM 2005).

[c]Hazardous Substances Data Bank (NLM 2001, 2002) and NTP Chemical Health and Safety Data (2001) at http://ntp-server.niehs.nih.gov/Main_Pages/Chem-HS.html. The NTP database is no longer available. NTP values can be identified by the use of the following symbols: <, >, and ≥. Conditions are reported if available.

[d]Hazardous Substances Data Bank (NLM 2001, 2002) unless otherwise specified. pK measured under the conditions specified. If no conditions were specified, none are reported.

[e]Hazardous Substances Data Bank (NLM 2001, 2002) or Material Safety Data Sheets. Boiling point measured under the conditions specified. If no conditions were specified, none are given.

[f]Ekwall et al. (1998) or Hazardous Substances Data Bank (NLM 2001, 2002) unless otherwise noted.

[g]Cosmetic Ingredient Review Panel (1983).

[h]Orphan Medical (1999).

[i]Glaxo Wellcome (2000).

[j]ATSDR (1999).

[k]EPA (2000b).

[l]ATSDR (2001).

[m]ATSDR (1995).

[n]EPA (1995).

[o]ATSDR (2000a).

[p]ATSDR (2004a).

[q]Ames (2000).

[r]Hardman et al. (1996).

[s]ATSDR (2000b).

[t]ATSDR (2004b).

[u]Casarett et al. (2001).

***[This Page Intentionally Left Blank]***

# Appendix F3

## Candidate Reference Substances

***[This Page Intentionally Left Blank]***

## F.3 Candidate Reference Substances

### F.3.1 Sources of Candidate Substances

The process of identifying the 72 reference substances started with the compilation of a database that ultimately contained 116 candidate substances. The intent of the SMT was to compile a database with more than 12 substances in each toxicity category that also met the other criteria, and then to prioritize the substances in each category to select the 72 reference substances to be tested. As recommended by the Workshop 2000 participants (ICCVAM 2001a), the following publicly available databases and other indicated sources were used to identify candidate chemicals:

- The MEIC program, which collected human toxicity data and *in vitro* toxicity data from 61 test methods for the first 50 chemicals (Ekwall et al. 1998). The ECVAM members of the SMT preferred these chemicals since human acute toxicity data had already been collected.
- The RC (Halle 1998, 2003), which contains a compilation of *in vitro* cytotoxicity and *in vivo* rodent $LD_{50}$ data for 347 chemicals
- The Toxic Exposure Surveillance System (TESS) (Litovitz et al. 2000), which compiles reports of toxic human exposures from poison control centers throughout the United States
- Pesticides recommended for consideration by the EPA Office of Pesticide Programs (OPP)
- The *Guidance Document* (ICCVAM 2001b), which reported *in vitro* NRU results for 11 RC chemicals using protocols similar to those used in the NICEATM/ECVAM validation study
- The U.S. NTP test database, which contains information on the toxicity of chemicals relevant to human exposure (NTP 2002)
- The EPA High Production Volume (HPV) Challenge Program, which is a voluntary testing program to provide the public with a complete set of baseline health and environmental effects data for each chemical that is manufactured within or imported into the United States at amounts > 1 million pounds/year (EPA 2000a)

### F.3.2 Selection of Candidate Substances

The 116 candidate substances consisted of the 72 reference substances selected for testing in the NICEATM/ECVAM validation study (see **Table 3-2**) and the alternate substances that were not selected for testing (see **Table F3-1**). The alternate candidate substances in **Table F3-1** are grouped by GHS acute oral toxicity classification. For each reference substance, the table provides the corresponding rat or mouse oral $LD_{50}$ value, the database(s) or other source(s) used to identify the chemical as a potential candidate, notes on volatility and/or DEA restrictions, and the type of product and/or use for the substance. Product/use categories were identified from HSDB (NLM 2001, 2002) or RTECS® (MDL Information Systems 2001, 2002).

The final list of candidate substances, which includes the substances in **Table 3-2** and **Table F3-1**, included:

- Sixty-five MEIC chemicals. These include the first 50 chemicals evaluated by MEIC as well as another 15 chemicals that were identified for future evaluation (C. Clemedson, personal communication 2001). Twenty of these chemicals were identified for the EDIT program, a follow-on project to the MEIC study to develop supplementary toxicity and kinetic tests (to determine distribution of chemicals in the body and biotransformation of chemicals to more toxic metabolites) to improve the prediction of human toxicity by the battery of tests identified as the best predictors in the MEIC program (Clemedson et al. 2002). The EDIT chemicals were selected by excluding MEIC chemicals that were volatile, those that precipitated at the $IC_{50}$ dose level, and those with sparse or insufficient data on human toxicity or mechanism of acute toxicity.
- Sixteen pesticides with extensive human exposure nominated by the EPA OPP. These included fenpropathrin, endosulfan, bromoxynil (phenol), fipronil, carbaryl, rotenone, metaldehyde, molinate, 1,3-dichloropropene, dichlorvos, chlorpyrifos, sodium arsenite, triphenyltin hydroxide,

cycloheximide, acrolein, and boric acid. Pentachlorophenol was also nominated, but was already on the candidate list since it was a MEIC chemical.

- Five substances associated with the highest incidence of toxic exposures reported by U.S. poison control centers participating in the TESS (Litovitz et al. 2000): hypochlorite, acetaminophen, ethanol, diphenhydramine, and isopropanol. The five chemicals with the greatest incidence of toxic exposures among children were the same, except that oxalate replaced ethanol. Most of these chemicals were already identified as candidate substances due to their inclusion in the MEIC study. Since hypochlorite (sodium salt) and diphenhydramine, were not already included, they were added to the list of candidates.
- Eleven substances recommended in the *Guidance Document* (ICCVAM 2001b) for qualifying *in vitro* cytotoxicity assays for the prediction of starting doses using the RC regression. These substances were recommended because the $IC_{50}$ and $LD_{50}$ data for these substances fit the RC regression line extremely well. These chemicals were sodium dichromate dihydrate, cadmium chloride, p-phenylenediamine, DL-propranolol HCl, trichlorfon, ibuprofen, nalidixic acid, salicylic acid, antipyrene, dimethylformamide, and glycerol
- Sixteen substances from the NTP database
    - Furfural, methyleugenol, and methylphenidate, scheduled for testing by the NTP National Center for Toxicogenomics (NCT) (G. Boorman, personal communication 2001), were added. Acetaminophen, another hepatotoxin to be tested by the NCT, was already a candidate substance because it was included in the MEIC study. Chromium (VI), recommended by the NTP for consideration due to the potential for human exposure via drinking water (NTP 2002) was represented in the list of candidate substances by sodium dichromate dihydrate, which was also recommended in the *Guidance Document* (ICCVAM 2001b).

  - Dibutyl phthalate, 5-aminosalicylic acid, propylparaben, gibberellic acid, and diethyl phthalate were added to increase the number of chemicals with $LD_{50}$ values >5000 mg/kg.
  - Trichloroacetic acid was added to increase the number of substances in the $2000 < LD_{50} \leq 5000$ mg/kg category.
  - Sodium selenate was added to increase the number of chemicals in the $LD_{50} \leq 5$ mg/kg category to 12.
  - Six chemicals that were also on the HPV list were added. Lactic acid, citric acid, and acetonitrile were added to increase the number of chemicals in the $2000 < LD_{50} \leq 5000$ mg/kg category. Tert-butylamine, 2,4-dinitrophenol, and acrolein were added to increase the number of chemicals in the $5 < LD_{50} \leq 50$ mg/kg category.
- Eight additional RC substances in the $LD_{50} \leq 5$ mg/kg category. These were: triethylenemelamine, busulfan, disulfoton, parathion, aminopterin, phenylthiourea, epinephrine bitartrate, and aflatoxin B1.

The goal to identify more than 12 candidate substances for each toxicity category was unrealized for three toxicity categories. The most toxic category ($LD_{50} \leq 5$ mg/kg), and least toxic categories ($2000 < LD_{50} \leq 5000$ mg/kg, $LD_{50} > 5000$ mg/kg), contained only 12 candidate substances each. The intermediate toxicity categories ($50 < LD_{50} \leq 300$ mg/kg, $> 300 < LD_{50} \leq 2000$ mg/kg), however, contained two to three times the minimum number of candidate chemicals.

## Table F3-1 Alternate Candidate Substances

| GHS Category[1]/Chemical | Rodent Oral $LD_{50}$[2] (mg/kg) | Source[3] | Notes[5] | Product/Use[4] |
|---|---|---|---|---|
| ***$LD_{50} \leq 5$ mg/kg*** | | | | |
| Aflatoxin B1 | 5.0 | RC (outlier) | Prohibitively expensive | Food contaminant |
| ***$5 < LD_{50} \leq 50$ mg/kg*** | | | | |
| 2,4-Dinitrophenol | 30 | RC (outlier), NTP, HPV | | Pesticide (fungicide/ insecticide) manufacturing |
| t-Butylamine | 44[a] | EPA, NTP, HPV | | Manufacturing |
| Acrolein | 46 | RC, TESS, EPA, NTP, HPV | Volatile (BP=52°C) | Pesticide (herbicide/ rodenticide/ algicide), manufacturing |
| ***$50 < LD_{50} \leq 300$ mg/kg*** | | | | |
| Pentachlorophenol | 51 | MEIC, RC (outlier), NTP | | Disinfectant |
| Amphetamine sulfate | 55 | MEIC, EDIT, RC (outlier), TESS, NTP | DEA | Pharmaceutical (stimulant) |
| Rotenone | 60 | RC, TESS, EPA, NTP | | Pesticide (insecticide/ piscicide) |
| Furfural | 65[a] | NTP, HPV | | Solvent, food additive |
| p-Phenylenediamine | 80 | RC, GD, NTP, HPV | | Dyeing |
| Chlorpyrifos | 82[a] | TESS, EPA, NTP | | Pesticide (insecticide) |
| Dextropropoxyphene HCl | 83 | MEIC, RC (outlier), TESS | | Pharmaceutical (analgesic) |
| Methadone | 86[a] | MEIC,TESS, NTP | DEA | Pharmaceutical (analgesic) |
| Fipronil | 92[a] | EPA | | Pesticide (insecticide) |
| Pentobarbital | 125 | MEIC, RC TESS | DEA | Pharmaceutical (sedative) |
| Bromoxynil (phenol) | 190[a] | EPA | | Pesticide (herbicide) |
| Diphenylhydantoin | 199 | MEIC, RC, TESS, NTP | | Pharmaceutical (anticonvulsant) |
| Metaldehyde | 227[a] | TESS, EPA | | Pesticide (molluscicide) |
| Carbaryl | 230 | RC, EPA. NTP | | Pesticide (insecticide) |
| ***$300 < LD_{50} \leq 2000$ mg/kg*** | | | | |
| Ferrous sulfate | 319 | MEIC, RC, TESS | | Food additive |
| Warfarin | 324 | MEIC, RC, TESS, EPA | | Pharmaceutical (anticoagulant), pesticide |
| Disopyramide | 333[a] | MEIC, TESS | | Pharmaceutical (antiarrythmic) |
| Barium II nitrate | 355 | MEIC, RC, TESS, NTP | | Pyrotechnic |
| Thioridazine HCl | 358 | MEIC, RC, TESS | | Pharmaceutical (antipsychotic) |
| Methylphenidate | 367[a] | NTP | DEA | Pharmaceutical (stimulant) |
| Molinate | 369[a] | EPA, NTP | | Pesticide (herbicide) |

## Table F3-1 Alternate Candidate Substances

| GHS Category[1]/Chemical | Rodent Oral $LD_{50}$[2] (mg/kg) | Source[3] | Notes[5] | Product/Use[4] |
|---|---|---|---|---|
| 2,4-Dichlorophenoxy-acetic acid | 369 | MEIC, RC, TESS, EPA, NTP, HPV | | Pesticide (herbicide) |
| Orphenadrine HCl | 425 | MEIC, RC, NTP | | Pharmaceutical (analgesic) |
| Trichlorfon | 451 | RC, EPA, GD, NTP | | Pesticide (insecticide) |
| Quinidine sulfate | 456 | MEIC, RC, NTP (base) | | Pharmaceutical (antiarrhythmic) |
| 1,3-Dichloropropene | 470[a] | TESS, EPA, NTP | | Pesticide (nematocide) |
| Theophylline | 600 [b] | MEIC, RC, TESS, NTP | | Pharmaceutical (antiasthmatic) |
| Isoniazid | 650 | MEIC, RC, TESS, NTP | | Pharmaceutical (antibiotic) |
| Diazepam | 709 | MEIC, EDIT, RC, TESS, NTP | DEA | Pharmaceutical (anxiolytic) |
| Maprotiline | 760[a] | MEIC, TESS | | Pharmaceutical (antidepressant) |
| Methyleugenol | 810[a] | NTP | | Food additive |
| Diphenhydramine HCl | 855 | MEIC, RC, TESS, NTP | | Pharmaceutical (antihistamine) |
| Malathion | 885 | MEIC, EDIT, RC, TESS, EPA, NTP | | Pesticide (insecticide) |
| Salicylic acid | 891 | RC, TESS, GD, NTP, HPV | | Pharmaceutical (analgesic) |
| Chloroform | 908 | MEIC, RC, NTP, HPV | Volatile (BP=61°C) | Solvent |
| Chloroquine diphosphate | 970 | MEIC, RC | | Pharmaceutical (antimalarial)) |
| Ibuprofen | 1009 | RC, TESS, GD | | Pharmaceutical (analgesic) |
| Nalidixic acid | 1349 | RC, GD, NTP | | Pharmaceutical (antibiotic) |
| Dichloromethane | 1597 | MEIC, RC, TESS, NTP, HPV | Volatile (BP=40°C) | Solvent |
| Antipyrene | 1800 | RC, GD | | Pharmaceutical (analgesic) |

[1]GHS=Globally Harmonized System of Classification and Labelling of Chemicals for acute oral toxicity (UN 2005).
[2]$LD_{50}$ data are from the Registry of Cytotoxicity (Halle 1998) and are for rats, the preferred species for oral acute toxicity studies, unless otherwise noted. Data with decimal places are rounded to the nearest one.
[3]Sources used to identify candidate chemicals: EDIT=Evaluation-guided Development of New *In Vitro* Test Batteries; EPA=Pesticides registered with the Environmental Protection Agency; EHS=EPA's Extremely Hazardous Substance list; HPV=High Production Volume chemicals (i.e., those that are imported into or produced in the United States in amounts ≥ 1,000,000 lbs/year; GD=*Guidance Document* (ICCVAM 2001b); MEIC=Multicentre Evaluation of *In Vitro* Cytotoxicity; NTP=National Toxicology Program; RC=Registry of Cytotoxicity with chemicals classified as regression outliers shown in parentheses; TESS=Toxic Exposure Surveillance System (Litovitz et al. 2000).
[4]Product/use categories from Hazardous Substances Data Bank (NLM 2002) or Registry of Toxic Effects of Chemical Substances ([RTECS®], MDL Information Systems 2002). Pharmaceutical uses from Gilman et al. (1985) or Thomson PDR® (2004).
[5]Only chemicals expected to be too volatile for the cytotoxicity assay system have "volatile" notations. BP=Boiling point. DEA (U.S. Drug Enforcement Agency) refers to Schedule II controlled substances. Chemicals with no "DEA" notation are expected to be under less strict control.
[a]RTECS® (MDL Information Systems 2002).
[b]Mouse

# Appendix G

## STATEMENT OF WORK (SOW)

**G1 A Validation Study For *In Vitro* Basal Cytotoxicity Testing ..... G-3**

**G2 Procedures for Acquisition, Preparation, Solubility Testing, and Distribution of Test Chemicals for a Validation Study for *In Vitro* Basal Cytotoxicity Testing ..... G-57**

***[This Page Intentionally Left Blank]***

# Appendix G1

## A Validation Study For *In Vitro* Basal Cytotoxicity Testing

***[This Page Intentionally Left Blank]***

# STATEMENT OF WORK

# A VALIDATION STUDY FOR *IN VITRO* BASAL CYTOTOXICITY TESTING

**BALB/c 3T3 Neutral Red Uptake Cytotoxicity Assay**
**and**
**Normal Human Keratinocyte Neutral Red Uptake Cytotoxicity Assay**

**June 21, 2002**

Prepared by

The National Toxicology Program (NTP) Interagency Center for the Evaluation of Alternative Toxicological Methods (NICEATM)

Based on Standard Operating Procedure Recommendations from an International Workshop Organized by the Interagency Coordinating Committee on the Validation of Alternative Methods (ICCVAM)

National Institute of Environmental Health Sciences (NIEHS)
National Institutes of Health (NIH)
U.S. Public Health Service
Department of Health and Human Services

## Table of Contents

1.0 PROJECT OBJECTIVES AND GENERAL REQUIREMENTS ..... 9
1.1 Project Objectives ..... 9
1.2 Response to the Statement of Work ..... 10
1.2.1 General Capabilities ..... 10
1.3 Guidelines ..... 10
1.4 Definitions ..... 10
2.0 ORGANIZATION ..... 12
2.1 Validation Study Sponsors ..... 12
2.2 Management Team ..... 12
2.2.1 Study Management Team ..... 12
2.2.1.1 NIEHS/NICEATM ..... 12
2.2.1.2 ECVAM ..... 12
2.2.2 Project Management and Chemical Distribution Team ..... 12
2.2.3 Contract Management ..... 13
3.0 TESTING FACILITY AND KEY PERSONNEL ..... 13
3.1 Testing Facility ..... 13
3.1.1 Personnel ..... 13
3.1.1.1 Facility Management ..... 13
3.1.1.2 Study Director ..... 13
3.1.1.3 Quality Assurance (QA) Director ..... 13
3.1.1.4 Scientific Advisor(s) ..... 14
3.1.1.5 Laboratory Technician(s) ..... 14
3.1.1.6 Safety Officer ..... 14
3.1.2 Facilities, Equipment, and Supplies ..... 14
3.1.2.1 Cell Culture Laboratory ..... 14
3.1.2.2 Equipment ..... 14
3.1.2.3 Supplies ..... 15
3.1.3 Health and Safety ..... 15
3.1.4 Quality Assurance ..... 16
3.1.4.1 GLP-Compliant Laboratories ..... 16
3.1.4.2 Non GLP-Compliant Laboratories ..... 16
4.0 TEST PHASES AND SCHEDULE ..... 17
4.1 Study Timeline and Deliverables ..... 17
4.2 Phase I ..... 18
4.2.1 Study Procedures ..... 18
4.2.1.1 Phase Ia: Positive Control Database ..... 18
4.2.1.2 Reporting Positive Control Data (Phase Ia) ..... 19
4.2.2 Criteria for Advancing to Phase Ib ..... 20
4.2.3 Study Procedures ..... 20
4.2.3.1. Phase Ib: Chemical Testing ..... 20
4.2.3.2 Reporting Test Chemical Data (Phase Ib) ..... 21
4.2.4 Criteria for Advancing to Phase II ..... 22
4.3 Phase II ..... 22
4.3.1 Study Procedures ..... 22
4.3.1.1 Reporting Test Chemical Data (Phase II) ..... 22
4.3.2 Criteria for Advancing to Phase III ..... 23
4.4 Phase III ..... 23
4.4.1 Study Procedures ..... 23
4.4.1.1 Reporting Data (Phase III) ..... 24

4.4.2 Criteria for Completion of Phase III ..... 24
4.5 Report Submission Timelines ..... 24
4.5.1 Draft Reports ..... 24
4.5.2 Final Report ..... 25
5.0 IDENTIFICATION OF TEST CHEMICALS AND CONTROL SUBSTANCES ..... 25
5.1 Test Chemicals ..... 25
5.1.1 Range of Toxicities ..... 25
5.1.2 Receipt of Chemicals ..... 25
5.1.3 Test Chemical Information for the Study Director ..... 26
5.2 Control Materials ..... 26
5.2.1 Vehicle Control (VC) ..... 26
5.2.1.1 3T3 NRU Assay (VC) ..... 26
5.2.1.2 NHK NRU Assay (VC) ..... 26
5.2.2 Positive Control (PC) ..... 26
5.3 Inventory of Test Chemicals ..... 26
5.4 Disposition of Test Chemicals ..... 26
5.5 Handling of Test Chemicals ..... 26
5.6 Determination of Purity, Composition, and Stability of Test Chemicals ..... 27
6.0 TEST SYSTEM ..... 27
6.1 Neutral Red Uptake (NRU) Cytotoxicity Assay ..... 27
6.1.1 Background ..... 27
6.1.2 Sterility of the Test System ..... 27
7.0 EXPERIMENTAL DESIGN AND METHODOLOGY – 3T3 NRU ASSAY ..... 28
7.1 Major Steps in the Performance of the Assay ..... 28
7.2 Procedures for Conducting the Test ..... 28
7.2.1 Cell Maintenance and Culture Procedures ..... 28
8.0 EXPERIMENTAL DESIGN AND METHODOLOGY – NHK NRU ASSAY ..... 29
8.1 Major Steps in the Performance of the Assay ..... 29
8.2 Procedures for Conducting the Test ..... 29
8.2.1 Cell Maintenance and Culture Procedures ..... 30
9.0 PREPARATION AND DELIVERY OF TEST CHEMICAL ..... 30
9.1 Preparation of Test Chemical ..... 30
9.1.1. Dissolving the Test Chemical ..... 30
9.1.1.1 Treatment Medium/Routine Culture Medium) ..... 30
9.1.1.2 DMSO ..... 30
9.1.1.3 Ethanol ..... 31
9.1.2. Test Chemical Solubility ..... 31
9.1.3 pH of Dilutions ..... 31
9.2 Delivery of Test Chemical ..... 31
9.3 Range Finder Experiment ..... 32
9.4 Test Chemical Dilutions ..... 32
10.0 DATA COLLECTION ..... 32
10.1 Nature of Data to be Collected ..... 32
10.2 Type of Media Used for Data Storage ..... 33
10.3 Documentation ..... 33
11.0 ACCEPTANCE CRITERIA FOR NRU ASSAYS ..... 33
11.1 Test Acceptance Criteria ..... 33
11.2 $IC_{50}$ Acceptance Criteria ..... 33
12.0 EVALUATION OF TEST RESULTS ..... 34
12.1 Cell Viability Determination ..... 34
12.2 $IC_X$ Determination ..... 34

13.0 DRAFT AND FINAL REPORTS ..... 35
14.0 RECORDS AND ARCHIVES ..... 35
15.0 ALTERATIONS OF THE STATEMENT OF WORK ..... 35
16.0 REFERENCES ..... 35
17.0 APPROVAL OF STATEMENT OF WORK ..... 37
ADDENDUM I ..... 38
ADDENDUM II ..... 49
ADDENDUM III ..... 50
ADDENDUM IV ..... 51
ADDENDUM V ..... 54
ADDENDUM VI ..... 55

# STATEMENT OF WORK

## A VALIDATION STUDY FOR *IN VITRO* BASAL CYTOTOXICITY TESTING

### BALB/c 3T3 Neutral Red Uptake Cytotoxicity Assay
### and
### Normal Human Keratinocyte Neutral Red Uptake Cytotoxicity Assay

## 1.0 PROJECT OBJECTIVES AND GENERAL REQUIREMENTS

### 1.1 Project Objectives

This Statement of Work outlines and supports the procedures for performing two *in vitro* basal cytotoxicity assays (the BALB/c 3T3 Neutral Red Uptake [NRU] assay and the Normal Human Keratinocyte [NHK] Neutral Red Uptake [NRU] assay) for analysis of test chemicals for a multi-laboratory *in vitro* Validation Study. These *in vitro* assays, recommended in *Guidance Document On Using In Vitro Data To Estimate In Vivo Starting Doses For Acute Toxicity* (ICCVAM, 2001a) use mammalian cell culture techniques to assess the basal cytotoxicity of chemicals.

A primary goal of this Validation Study is to evaluate the usefulness and effectiveness of *in vitro* basal cytotoxicity assays for reducing and refining animal use for acute oral toxicity determinations of chemicals by predicting starting doses for *in vivo* rodent acute lethality assays. Participants at an international workshop (ICCVAM, 2001b) suggested that a validation study for *in vitro* assays is needed to continue the development of alternative tests as replacements for animal testing. This is the first step to further standardization and evaluation of two test methods that may be used in conjunction with other methods as components of a test battery which may eventually replace the rodent acute oral toxicity tests.

Data will be used to:

1) Develop standardized *in vitro* basal cytotoxicity protocols with sufficient detail and instruction for distribution to other laboratories (e.g., Federal regulatory agencies) for their immediate use,
2) Evaluate the intra- and inter-laboratory reproducibility of the assays (i.e., to access test reproducibility and optimize to further enhance reproducibility),
3) Determine the reduction in the number of animals that would be used and/or killed in lethality assays compared with the conventional method of predicting starting doses, and
4) Assess the relevance of the two standardized *in vitro* cytotoxicity assays for estimating rodent oral LD50 values across the six Globally Harmonised System (GHS; OECD, 2001) categories of acute oral toxicity and estimating human lethal concentrations.

This study will test the hypothesis of the Registry of Cytotoxicity (RC) prediction model (Halle, 1998) by comparing the NRU regressions that are developed from the two assays to the RC regression. The hypothesis is that the two NRU assays will provide the same regression as the RC (i.e., comparison of $IC_{50}$ data vs. $LD_{50}$ data).

The proposed Validation Study will provide the means to determine $IC_{20}$, $IC_{50}$, and $IC_{80}$ values for a test set of 72 chemicals with varying degrees of toxicity. This set of chemicals was selected separate and prior to this Statement of Work by the Study Management Team. The

basis for selection of this test set is discussed in the Study Design document prepared by the Study Management Team.

## 1.2 Response to the Statement of Work

The proposals submitted in response to the Statement of Work to the designated contacts shall include:

a) A timetable for project milestones
b) A cost estimate for performing all testing (both assays) in all phases of the Validation Study.
c) Cost estimates for repeating Phases Ia, Ib, and II as options, if necessary (see **Sections 4.2.2, 4.2.4, and 4.3.2**).
d) Cost for a third replicate of Phase III testing as an option, if necessary
e) Cost of software for data analysis (e.g., GraphPad PRISM® 3.0) not to exceed $500.

### 1.2.1 *General Capabilities*

The contracted laboratories (Testing Facilities) shall be capable of performing the following:

a) The Testing Facilities shall prepare Standard Operating Procedures (SOPs) for the 3T3 NRU assay and the NHK NRU assay (see **Section 1.4** – Definitions - SOPs)
b) The Testing Facilities shall perform the 3T3 NRU assay and the NHK NRU assay (under aseptic *in vitro* laboratory conditions) for the three phase Validation Study as identified in **Section 4.0**.
c) The Testing Facilities shall provide $IC_{20}$, $IC_{50}$, and $IC_{80}$ values for each tested chemical and other information addressed in this document (e.g., phase reports) to the Study Management Team through the designated contacts (**Section 2.2**).
d) Testing Facilities that are compliant with Good Laboratory Practices (GLP) shall perform all aspects of the Validation Study in accordance with GLPs.
e) Testing Facilities that are not GLP-compliant shall perform all aspects of the Validation Study "in the spirit" of GLP which is defined in **Section 1.4** and addressed throughout this Statement of Work.
f) All Testing Facilities shall adhere to this Statement of Work throughout the Validation Study.

## 1.3 Guidelines

The Management Team and/or its representatives may inspect and audit the Testing Facilities used for this study to ensure that the Study Management Team's minimum requirements and guidelines are being followed. The contractor shall notify the Study Management Team of any changes in Key Personnel (identified in Section 3.1.1)

## 1.4 Definitions

**Blinded/Coded Chemicals:** Test chemicals supplied to the Testing Facilities that are coded (by an NIEHS/NTP-designated contractor) such that the Testing Facilities do not know the identity of the chemicals. Only the Project Officer, Management Team, and contractor know the contents of each test chemical vessel. The test chemicals will be purchased, aliquoted, coded, and distributed by a contractor under the guidance of the NIEHS Project Officer and the Management Team.

**Good Laboratory Practices (GLPs):** Regulations governing the conduct, procedures, and operations of toxicology laboratories; regulations to assure the quality and integrity of the data and to address such matters as organization and personnel, facilities, equipment, facility operations, test and control articles, and Validation Study protocol (Statement of Work) and

conduct (U.S. Food and Drug Administration, Title 21 CFR Part 58; Environmental Protection Agency, Title 40 CFR Part 160).

**$IC_X$:** Inhibitory concentration estimated to affect endpoint in question by X % ($IC_{20}$ = 20 % affected; $IC_{50}$ = 50 % affected; $IC_{80}$ = 80 % affected).

**Lead Laboratory (Protocols):** A designated laboratory (identified by the Study Management Team and different from the lead laboratory for data analysis) with experience in each cytotoxicity method. The laboratory will assist the Study Management Team with troubleshooting laboratory challenges; the lead laboratory shall develop a study protocol from the Statement of Work and the Test Method Protocols that shall be used by all laboratories in the Validation Study.

**Lead Laboratory (Data Analysis):** A designated laboratory (identified by the Study Management Team and different from the lead laboratory for protocols) with experience in data analysis specific to the software that will be used in the study; The laboratory will assist the Study Management Team with troubleshooting data analysis challenges.

**Replicate: An independent test run on different days (e.g.,** duplicate 96-well plates for a particular test chemical, each plate a replicate assay); replicate wells within the 96-well plate (e.g., six wells of one test chemical concentration equals six replicate wells).

**Spirit of GLP:** Laboratories that are non GLP-compliant shall adhere to GLP principles and other method parameters as put forth in this Statement of Work and the Test Method Protocols (provided by NIEHS/NICEATM); documentation and accountability shall be equal to GLP requirements; laboratories must make assurances that they are equal in performance criteria and that there is parity amongst the laboratories.

**Standard Operating Procedures (SOPs):** Written documents that describe, in great detail, the routine procedures to be followed for a specific operation, analysis, or action; consistent use of an approved SOP ensures conformance with organizational practices, reduced work effort, reduction in error occurrences, and improved data comparability, credibility, and defensibility; SOPs also serve as resources for training and for ready reference and documentation of proper procedures; each Testing Facility involved in the Validation Study shall draft SOPs specifically for its laboratories based on: protocols supplied by commercial sources specifically for cell culture products and cell lines; this Statement of Work and the Test Method Protocols provided by NIEHS/NICEATM, and the study protocol developed by the lead laboratory.

**Statement of Work:** A description of testing required for the *in vitro* Validation Study; defines all phases of the Validation Study and the purpose of the procedures; provides the details of the experimental design, data acquisition, data analysis, and preparation of reports; supports Test Method Protocols (equivalent to GLP protocols) and acts as a study plan.

**Study Protocol:** A description of the objectives and all methods for the conduct of the study (i.e., same as "protocol" according to GLP guidelines, 40 CFR 792, at http://www.ovpr.uga.edu/qau/tscatoc.html. The Study Protocol shall be developed from the Test Method Protocols for NHK and 3T3 NRU assays, which accompany this Statement of Work. The Study Protocol shall contain information such as the title and purpose of the study, name and address of the sponsor, the name and address of the testing facility at which the study is being conducted, proposed experimental start and termination dates, and other items specified in 40 CFR 792.

**Test Method Protocols:** Specific and detailed guides for performing the 3T3 NRU and NHK NRU cytotoxicity assays; adapted by NICEATM from protocols included in ICCVAM (2001a); equivalent to GLP protocols; protocols shall be incorporated into the SOPs specific to each Test Facility in the Validation Study.

## 2.0 ORGANIZATION

### 2.1 Validation Study Sponsors

- National Institute of Environmental Health Sciences (NIEHS)
- The National Toxicology Program (NTP) Interagency Center for the Evaluation of Alternative Toxicological Methods (NICEATM)
- U.S. Environmental Protection Agency (U.S. EPA)
- The European Centre for the Validation of Alternative Methods (ECVAM).

### 2.2 Management Team

#### 2.2.1 *Study Management Team*

##### 2.2.1.1 ***NIEHS/NICEATM***

Dr. William S. Stokes (NICEATM/NIEHS) – Co-chair – Study Management Team
Dr. Judy Strickland (NICEATM/ILS) – Project Coordinator
Mr. Michael Paris (NICEATM/ILS) – Assistant Project Coordinator
Dr. Ray Tice (NICEATM/ILS) – Technical Advisor

NICEATM
79 T.W. Alexander Drive
Bldg. 4401, MD-EC-17
3rd Floor, Room 3126
P.O. Box 12233
Research Triangle Park, NC 27709

##### 2.2.1.2 ***ECVAM***

Professor Michael Balls – Co-chair – Study Management Team
Dr. Silvia Casati
Dr. Andrew Worth

European Commission
Joint Research Centre
Institute for Health and Consumer Protection
Management Support Unit - TP 202
I-21020 Ispra (VA) - Italy

#### 2.2.2 *Project Management and Chemical Distribution Team*

Ms. Molly Vallant (NIEHS) – NIEHS Project Officer for BioReliance, Inc.
Dr. Martin L. Wenk (BioReliance, Inc., Rockville, MD) – Principal Investigator/Chemical Distribution

#### 2.2.3 *Contract Management*

Ms. Jackie Osgood (NIEHS) – Contracting Officer
Mr. Don Gula (NIEHS) – Contracting Officer

## 3.0 TESTING FACILITY AND KEY PERSONNEL

### 3.1 Testing Facility

The Testing Facility shall have competence in performing *in vitro* cytotoxicity assays under aseptic laboratory conditions and shall provide competent personnel, adequate facilities, equipment, supplies, proper health and safety guidelines, and satisfactory quality assurance procedures.

#### 3.1.1 *Personnel*

##### 3.1.1.1 ***Facility Management***

The facility management is responsible for establishing scientific guidelines and procedures, training and supervision of professional and technical staff, and evaluation of results and performance within their discipline area relative to the Study Management Team requirements. The manager must maintain records of the qualifications, training and experience, and a job description for each professional and technical individual involved in the Validation Study.

##### 3.1.1.2 ***Study Director***

A scientist or other professional of appropriate education, training, and experience in *in vitro* cytotoxicity assay performance, or combination thereof, shall be the Study Director. The Study Director has the overall responsibility for the technical conduct of the Validation Study (e.g., GLP adherence or implementation of spirit of GLP) at the Testing Facility and shall be responsible for determining test acceptance. The Study Director shall be responsible for providing SOPs for the Validation Study and incorporating pertinent information obtained from the Statement of Work and the Test Method Protocols. Other duties include the interpretation and analysis of data, documentation of all Validation Study aspects (including maintenance of a Study Workbook), and production of all draft and final written Validation Study reports.

##### 3.1.1.3 ***Quality Assurance (QA) Director***

For Testing Facilities that are GLP-compliant, the Quality Assurance Director shall **monitor** the Validation Study to assure conformance with GLP requirements for all aspects of the Validation Study (i.e., facilities, equipment, personnel, methods, practices, records, controls, transference of data into software, SOPs). The Quality Assurance Director or unit can be any person or organizational element, except the Study Director, designated by Testing Facility management to perform the duties relating to quality assurance of the studies. The Quality Assurance duties are not a substitute for the Study Director duties.

For Testing Facilities performing the Validation Study in the spirit of GLP, management shall appoint an individual to assure that all records, documents, raw data, reports, and specimens are available to the Management Team through the designated contacts if an inspection is requested.

**3.1.1.4** ***Scientific Advisor(s)***
Scientists or other professionals of appropriate education, training, and experience in *in vitro* laboratory methods and techniques who provide scientific guidance to the Study Director and other laboratory personnel.

**3.1.1.5** ***Laboratory Technician(s)***
*In vitro* cytotoxicity assays require personnel trained in sterile tissue culture techniques and general laboratory procedures. At least two individuals must be capable of performing the *in vitro* assays for the Validation Study. Performance of the assays requires a relatively moderate degree of technical capability and a high degree of technical accuracy. Each individual engaged in the conduct of or responsible for the supervision of a Validation Study shall have education, training, and experience, or combination thereof, to enable that individual to perform the assigned duties. The individuals in a GLP-compliant laboratory must be trained in GLP requirements and technical ability must be documented as per GLP requirements. Non GLP-compliant laboratory personnel must be able to perform all aspects of the Validation Study in the spirit of GLP.

**3.1.1.6** ***Safety Officer***
A designated Safety Officer (someone not involved in the actual conduct of the Validation Study) at each participating laboratory will receive the blinded (coded) test chemicals from an NIEHS/NTP-designated contractor (BioReliance) and shall transfer the test chemicals to the Study Director without revealing the contents of the test chemical containers. A sealed health and safety information package will accompany the test chemicals and the Safety Officer shall retain the package until the completion of the Validation Study. At the end of the Validation Study, the Safety Officer shall return the unopened package to the contractor (BioReliance). If any Test Facility personnel should open the package at any time during the Validation Study, the Safety Officer shall notify the Management Team through the designated contacts.

**3.1.2** ***Facilities, Equipment, and Supplies***

**3.1.2.1** ***Cell Culture Laboratory***
Each Testing Facility must provide a designated cell culture laboratory to ensure that *in vitro* cytotoxicity assays can be performed under clean and proper aseptic conditions. The laboratory must be located such that there is minimal through traffic to reduce possible disturbances that may compromise the cell culture assays. Room temperature of the laboratory must be easily regulated, monitored, and documented. Access to the Validation Study assays and test chemicals shall be restricted to appropriate personnel as determined by facility management.

**3.1.2.2** ***Equipment***
Each Testing Facility must provide at a minimum the following equipment:
a) Laminar flow hood (biohazard type and restricted to cell culture assays)
b) Cell culture incubators
   - $37^{o}C \pm 1^{o}C$, 5 % ± 1 % $CO_2$, 90 ± 5 % humidified
c) Low-speed centrifuge
d) Water bath ($37^{o}C$)
e) Inverse phase microscope
f) Pippettors (multichannel pipettor, micropipettors, multichannel pipette units)

g) Spectrophotometric plate reader (equipped with a 540 nm ± 10 nm filter)
h) Computer (for data transformation and analysis)
i) Liquid nitrogen freezer (for storage of cryopreserved cells)
j) Refrigerator (4°C)
k) Freezers (-20°C and -70°C to -80°C)
l) Autoclave (for instruments and for biohazardous waste materials)
m) Balance
n) pH meter
o) Cell counting system (e.g., hemocytometer, Coulter counter)
p) General cell culture laboratory equipment (e.g., glassware, filtration systems, cell culture plasticware, etc.)
q) pH paper (wide and narrow range)

All equipment maintenance and calibration shall be routinely performed and documented as per GLP guidelines (or spirit of GLP for non GLP-compliant laboratories) and Testing Facility procedures. Additional detail is provided in **Section 10.3** and Addendum IV.

#### 3.1.2.3 ***Supplies***

a) General cell culture materials and supplies are needed and are specifically described in the provided Test Method Protocols and in the *Guidance Document* (ICCVAM, 2001a). All cell culture reagents must be labeled so as to indicate source, identity, concentration, stability, preparation and expiration dates, and storage conditions.
b) BALB/c 3T3 mouse cells, clone 31
   - Cryopreserved (5 vials, same lot)
   - CCL-163, *LGC Reference Materials*, Customer Service, Queens Road, Teddington, Middlesex, TW110LY, UK (http://www.lgc.co.uk/atcc/)
   - CCL-163, *American Type Culture Collection (ATCC),* Manassas, VA, USA (http://www.atcc.org/)
c) Normal Human Epidermal Keratinocytes (NHK)
   - Cryopreserved (20 vials, same lot, first passage)
   - Non-transformed cells; from cryopreserved primary cells (**Clonetics #CC-2507** [pooled neo-natal keratinocytes]**)**
   - *Clonetics/BioWhittaker* [BioWhittaker, 8830 Biggs Ford Road, Walkersville, MD 21793-0127 (http://www.cambrex.com/subsidiaries/s%2Dbw%5Finc/s%2Dbiowhittaker%2Dinc%2Dcontact2.htm)
   - *BioWhittaker Europe* [BioWhittaker Europe, S.P.R.L. Parc Industriel de Petit Rechain, B-4800 Verviers, BELGIUM] (http://www.biowhittaker.be/index.htm)

### 3.1.3 ***Health and Safety***

Each Testing Facility shall conform to all local, state, and federal statutes in effect at the time of this Validation Study. The designated Safety Officer shall be the point of contact for health and safety issues.

### 3.1.4 *Quality Assurance*

#### 3.1.4.1 ***GLP-Compliant Laboratories***

GLP-compliant laboratories shall conduct this Validation Study in compliance with Good Laboratory Practice (GLP) Standards (U.S. Food and Drug Administration, Title 21 CFR Part 58; Environmental Protection Agency, Title 40 CFR Part 160). The appropriate QA unit (as per GLPs) shall review the protocol and audit the in-life phase, laboratory notebooks, and final report data.

The Final Reports for all phases of the Validation Study shall be audited by the Quality Assurance unit of the Testing Facility for GLP compliance and a QA Statement shall be provided by the Testing Facility. Each Final Report shall identify: 1) the phases and data inspected, 2) dates of inspection, and 3) dates findings were reported to the Study Director and Testing Facility management. The QA Statement shall identify whether the methods and results described in the Final Report accurately reflect the raw data produced during the Validation Study.

#### 3.1.4.2 ***Non GLP-Compliant Laboratories***

Non GLP-compliant laboratories shall use GLP standards referenced in the ECVAM Workshop 37 Report (Cooper-Hannan, 1999) and the OECD Principles of GLP (OECD, 1998) as guidelines for conducting the Validation Study in the spirit of GLP.

At a minimum, the following laboratory parameters and equipment must be routinely documented (e.g., log books; see Addendum IV). The documents shall be archived such that they can be available to the Study Management Team through the designated contacts upon request.

***Daily Documentation (value, time, and date)***

- Laboratory: room temperature
- Incubators: temperature, %$CO_2$, %humidity
- Water bath: temperature
- Refrigerators and freezers: temperature
- Cell cultures: visual observations (see Test Method Protocols)

***Per Use Documentation (value, time, and date)***

- Cryogenic storage unit: amount of liquid $N_2$ in container; when liquid $N_2$ added
- Balance: standard weight used to calibrate
- pH meter: values for standards used to determine slope
- Cell counter: standard used
- Media: identification of all media and components used

***Periodic Documentation***

- Media and components: date of receipt; lot numbers; expiration dates
- 3T3 and NHK cells: date of receipt; lot number; storage conditions
- Plastic tissue-culture ware (sterile, disposable): stock and lot numbers
- Computer software: identification and description
- Calibration of Instruments: SOPs for laboratory equipment
  - Incubators
  - Laminar flow hoods
  - Autoclaves

Micropipettors
Balances
pH meters
Cell counters
Refrigerators
Freezers
Water baths
Spectrophotometer plate readers

A statement from the Testing Facility shall be included with each Final Report and shall identify whether the methods and results described in the Final Report accurately reflect the raw data produced during the Validation Study and provide assurance that all testing was done in the spirit of GLP.

## 4.0 TEST PHASES AND SCHEDULE

See Addendum VI for Gantt Chart of study timelines and deliverables.

### 4.1 Study Timeline and Deliverables

| TASK | WEEK | ESTIMATED DATE |
|---|---|---|
| Statement of Work issued by NIEHS to the Testing Facility | 0 | March 29, 2002 |
| Response /Proposal received from the Testing Facility | 6 | May 10, 2002 |
| Award of Contracts | 13 | June 28, 2002 |
| Submission of Study Protocol, CVs of Key Personnel and SOPs | 15 | July 12, 2002 |
| Start Testing – Phase I (Phase Ia) | 18 | July 29, 2002 |
| End Phase Ia | 22 | August 26, 2002 |
| Begin Phase Ib | 26 | September 26, 2002 |
| End Phase Ib | 31 | October 29, 2002 |
| Begin Phase II | 36 | December 2, 2002 |
| End Phase II | 46 | February 10, 2003 |
| Begin Phase III | 52 | March 26, 2003 |
| Final Report (Phase III) to SMT | 89 | December 9, 2003 |

#### 4.1.1 Deliverables

| | ESTIMATED DUE DATES | | | |
|---|---|---|---|---|
| **REPORTS** | **PHASE 1a** | **PHASE Ib** | **PHASE II** | **PHASE III** |
| Biweekly | * | * | * | * |
| Draft | Week 24<br>Sept. 9, 2002 | Week 33<br>Nov. 11, 2002 | Week 48<br>Feb. 25, 2003 | Week 82<br>Oct. 24, 2003 |
| Final | Week 33<br>Nov. 11, 2002 | Week 42<br>Jan. 13, 2003 | Week 57<br>April 28, 2003 | Week 89<br>Dec.9, 2003 |
| Study Workbook (Draft) | Week 24<br>Sept. 9, 2002 | Week 33<br>Nov. 11, 2002 | Week 48<br>Feb. 25, 2003 | Week 82<br>Oct. 24, 2003 |
| Study Workbook (Final) | Week 33<br>Nov. 11, 2002 | Week 42<br>Jan. 13, 2003 | Week 57<br>April 28, 2003 | Week 89<br>Dec.9, 2003 |

* Biweekly reports shall begin at the time of implementation of the contracts and continue until the final report is submitted.

### 4.2 Phase I

Phase I will be the training phase for laboratory personnel. This phase includes developing a positive control database (Phase Ia) and testing three unknown chemicals (Phase Ib). SOPs for the two NRU cytotoxicity assays shall be developed by the appropriate laboratory personnel prior to implementation of test procedures (See **Section 1.4** – Definitions – SOPs). They will be submitted along with the signed protocols to the designated contacts before initiation of Phase I.

#### 4.2.1 *Study Procedures*

##### 4.2.1.1 ***Phase Ia: Positive Control Database***

An historical database of **$IC_{50}$** values for the positive control chemical (Sodium Lauryl Sulfate [SLS]) will be established and maintained for each NRU assay by performing 10 concentration-response assays (10 microtiter plates, one plate per assay) on both cell types. A range finder experiment will be performed before initiating the 10 concentration-response assays (**Section 9.3**). The Test Facility personnel shall prepare and test eight concentrations (per microtiter plate) of the positive control chemical by diluting the stock solution with a constant factor for the range finder experiment (e.g., log dilutions [1:10, 1:00, 1:1000, etc.]). For the definitive concentration-response assays, the Study Director shall use a $\sqrt[6]{10} = 1.47$ dilution scheme centered on the $IC_{50}$ identified in the range-finding assay.

Once a range has been determined that satisfies the criteria in **Section 11.2**, then the Test Facility shall perform two tests per day (each assay) on five different days. Control limits for the positive control chemical shall be established and a draft report (including range finding data) shall be provided to the designated contacts. After evaluation of the data, the Management Team will decide when to advance to the next phase of the Validation Study.

The 95 % confidence interval (CI) of the $IC_{50}$ of SLS will be established and defined as an acceptance criterion for test sensitivity for the 3T3 NRU and NHK

NRU assays. The confidence intervals shall be calculated using the average of the individual $IC_{50}$ values from each positive control assay performed. An example of an historical mean $IC_{50}$ of SLS in mammalian cultures is **93 µg /ml** and the 95 % CI is **70 - 116 µg /ml** (Spielmann et. al., 1991). An example of an historical mean $IC_{50}$ of SLS in NHK cultures is **4.4 µg/ml ± 0.97 µg/ml [**two standard deviations] (Triglia, 1989).

The following 96-well plate configuration will be used for the positive control assays.

***Figure 1. 96-Well Plate Configuration for Positive Control Assays (Phase Ia)***

| | 1 | 2 | 3 | 4 | 5 | 6 | 7 | 8 | 9 | 10 | 11 | 12 |
|---|---|---|---|---|---|---|---|---|---|---|---|---|
| A | b | b | b | b | b | b | b | b | b | b | b | b |
| B | b | VC | $C_1$ | $C_2$ | $C_3$ | $C_4$ | $C_5$ | $C_6$ | $C_7$ | $C_8$ | VC | b |
| C | b | VC | $C_1$ | $C_2$ | $C_3$ | $C_4$ | $C_5$ | $C_6$ | $C_7$ | $C_8$ | VC | b |
| D | b | VC | $C_1$ | $C_2$ | $C_3$ | $C_4$ | $C_5$ | $C_6$ | $C_7$ | $C_8$ | VC | b |
| E | b | VC | $C_1$ | $C_2$ | $C_3$ | $C_4$ | $C_5$ | $C_6$ | $C_7$ | $C_8$ | VC | b |
| F | b | VC | $C_1$ | $C_2$ | $C_3$ | $C_4$ | $C_5$ | $C_6$ | $C_7$ | $C_8$ | VC | b |
| G | b | VC | $C_1$ | $C_2$ | $C_3$ | $C_4$ | $C_5$ | $C_6$ | $C_7$ | $C_8$ | VC | b |
| H | b | b | b | b | b | b | b | b | b | b | b | b |

VC = untreated VEHICLE CONTROL (mean viability set to 100 %)
$C_1 – C_8$ = POSITIVE CONTROL (SLS) at eight concentrations (C1 = highest, C8 = lowest)
b = BLANKS (contain **no** cells)

**4.2.1.2** ***Reporting Positive Control Data (Phase Ia)***

***Biweekly Reports***: Each testing facility will provide a biweekly progress report to the designated contacts. These reports will be provided in electronic format (i.e., email with attachments) and will include raw and interim data as the study progresses. The Management Team will in turn provide a weekly progress report addressing the Validation Study as a whole to all of the Testing Facilities.

***Draft Report***: At the conclusion of Phase Ia, a draft report of the positive control data shall be provided by the Study Director to the designated contacts. The draft report (entitled: *In Vitro Validation Study – Phase Ia: Development of a Positive Control Database in Rodent and Human Cell Systems*) shall include everything noted in Addendum I (Draft Report – Phase Ia). If the Phase Ia data does not meet test acceptance criteria, then the Management Team (through the designated contacts) will work with the Test Facility and lead laboratory to identify problems and make corrections as needed. Once unresolved issues have been resolved, the

Validation Study will proceed. The Validation Study will advance to Phase Ib once all participating laboratories have submitted acceptable draft reports. The draft report shall be submitted in email and five (5) hard copy formats. File attachments in email shall be submitted in Microsoft® Word (or equivalent) and Excel format and all email correspondence shall be copied to the designated contacts. Copies of the unaudited Study Workbook pages may be submitted as attachments in hard copy format.

***Final Report***: Once the draft report provides data that meets test acceptance criteria, then the Project Coordinator shall inform the Study Director to prepare a Quality Assurance audited final report for Phase Ia. The final report shall be submitted in email and five (5) hard copy formats. File attachments in email shall be submitted in Microsoft® Word (or equivalent) and Excel format and all email correspondence shall be copied to the designated contacts. Copies of the audited Study Workbook pages may be submitted in hard copy format as an attachment to the report. The final report will not need to be completed to continue to Phase Ib. (See Validation Study timelines in **Section 4.1** and Report submission timelines in **Section 4.5**.)

### 4.2.2 *Criteria for Advancing to Phase Ib*

If there is excessive variation of ICx data within or among laboratories involved in the Validation Study, the lead laboratory for each method shall assist the Management Team (through the designated contacts) to determine the cause and recommend appropriate actions needed to reduce the variation. The Statement of Work, Test Method Protocols, and SOPs shall be revised if necessary, and testing repeated until acceptable proficiency is achieved. The Management Team will decide when all laboratories will advance to the next phase of the Validation Study. A teleconference shall be held with all of the appropriate participants of the Validation Study and the Management Team will relate information concerning the advancement of the Validation Study.

### 4.2.3 *Study Procedures*

#### 4.2.3.1. ***Phase Ib: Chemical Testing***

Three blinded/coded chemicals with varying cytotoxicity (high, medium, and low) will be tested in both NRU assays. Eight concentrations of each chemical will be tested in a 96-well plate (six wells per concentration) with at least four replicates per concentration required for data analysis (**Section 12.0**). Only one test chemical will be tested on each plate. The assay setup will follow the 96-well (microtiter) plate configuration in Figure 2. A range finder experiment will be performed before initiating concentration-response assays (**Section 9.3**). After the range finding assay is completed, the concentration-response experiment shall be performed three times on three different days for each assay and each chemical. Laboratories will **calculate $IC_{20}$, $IC_{50}$, and $IC_{80}$ values in µg/ml,** calculate confidence limits for each value, and report this and all raw data to the Management Team through the designated contacts.

***Figure 2. Plate Configuration for 3T3 NRU and NHK NRU Assays (Phase Ib)***

| | 1 | 2 | 3 | 4 | 5 | 6 | 7 | 8 | 9 | 10 | 11 | 12 |
|---|---|---|---|---|---|---|---|---|---|---|---|---|
| A | b | b | b | b | b | b | b | b | b | b | b | b |
| B | b | VC | $C_1$ | $C_2$ | $C_3$ | $C_4$ | $C_5$ | $C_6$ | $C_7$ | $C_8$ | VC | b |
| C | b | VC | $C_1$ | $C_2$ | $C_3$ | $C_4$ | $C_5$ | $C_6$ | $C_7$ | $C_8$ | VC | b |
| D | b | VC | $C_1$ | $C_2$ | $C_3$ | $C_4$ | $C_5$ | $C_6$ | $C_7$ | $C_8$ | VC | b |
| E | b | VC | $C_1$ | $C_2$ | $C_3$ | $C_4$ | $C_5$ | $C_6$ | $C_7$ | $C_8$ | VC | b |
| F | b | VC | $C_1$ | $C_2$ | $C_3$ | $C_4$ | $C_5$ | $C_6$ | $C_7$ | $C_8$ | VC | b |
| G | b | VC | $C_1$ | $C_2$ | $C_3$ | $C_4$ | $C_5$ | $C_6$ | $C_7$ | $C_8$ | VC | b |
| H | b | b | b | b | b | b | b | b | b | b | b | b |

VC = untreated VEHICLE CONTROL (mean viability set to 100 %)
$C_1 – C_8$ = TEST CHEMICAL at <u>eight</u> concentrations (C1 = highest, C8 = lowest)
b = BLANKS (contain **no** cells)

#### 4.2.3.2 ***<u>Reporting Test Chemical Data (Phase Ib)</u>***

***<u>Biweekly Reports</u>***: Each testing facility will provide a biweekly progress report to the designated contacts (See Addendum I). These reports will be in electronic format (i.e., email with attachments) and will include raw and interim data as the study progresses. The Management Team will in turn provide a weekly progress report addressing the Validation Study as a whole to all of the Testing Facilities. Problems and issues shall be resolved in this manner.

***<u>Draft Report</u>***: At the conclusion of Phase Ib, a draft report of the Phase Ib test chemical data shall be provided by the Study Director to the designated contacts. The draft report (entitled: *In Vitro Validation Study – Phase Ib: Training Phase for Cytotoxicity Study of Three Coded Chemicals in Rodent and Human Cell Systems*) shall include everything noted in Addendum I (Draft Report – Phase Ib). If the Phase Ib data does not meet test acceptance criteria, then the Management Team (through the designated contacts) will work with the Test Facility and lead laboratory to identify problems and make corrections as needed. Once unresolved issues have been resolved, the Validation Study will proceed. The Validation Study will advance to Phase II once all participating laboratories have submitted acceptable draft reports. The draft report shall be submitted in email and five (5) hard copy formats. File attachments in email shall be submitted in Microsoft® Word (or equivalent) and Excel format and all email correspondence shall be

copied to the designated contacts. Copies of the unaudited Study Workbook pages may be submitted as attachments in hard copy format.

***Final Report***: Once the draft report provides data that meets test acceptance criteria, then the Project Coordinator shall inform the Study Director to prepare a Quality Assurance audited final report for Phase Ib. The final report shall be submitted in email and five (5) hard copy formats. File attachments in email shall be submitted in Microsoft® Word (or equivalent) and Excel format and all email correspondence shall be copied to the designated contacts. Copies of the audited Study Workbook pages may be submitted in hard copy format as an attachment to the report. The final report will not need to be completed to continue to Phase II. (See Validation Study timelines in **Section 4.1** and Report submission timelines in **Section 4.5**.)

#### 4.2.4 *Criteria for Advancing to Phase II*

If there is excessive variation of ICx data within or among laboratories involved in the Validation Study, the lead laboratory for each method shall assist the Management Team (through the designated contacts) to determine the cause and recommend appropriate actions needed to reduce the variation. The Statement of Work, Test Method Protocols, and SOPs shall be revised if necessary, and testing repeated until acceptable proficiency is achieved. The Management Team will decide when all laboratories will advance to the next phase of the Validation Study. A teleconference shall be held with all of the appropriate participants of the Validation Study and the Management Team will relate information concerning the advancement of the Validation Study.

### 4.3 Phase II

#### 4.3.1 *Study Procedures*

Phase II of this Validation Study is the qualification phase. This phase requires testing nine blinded/coded chemicals in the same *in vitro* cytotoxicity assays and in the same concentration-response fashion as in Phase Ib. After a range-finding assay is completed, the concentration-response experiment for each chemical shall be performed three times, once each on three different days. Laboratories will **calculate $IC_{20}$, $IC_{50}$, and $IC_{80}$ values in µg/ml,** calculate confidence limits for each value, and report this and all raw data to the Study Management Team through the designated contacts.

##### 4.3.1.1 ***Reporting Test Chemical Data (Phase II)***

***Biweekly Reports***: Each testing facility will provide a biweekly progress report to the designated contacts (See Addendum I). These reports will be in electronic format (i.e., email with attachments) and will include raw and interim data as the study progresses. The Management Team will in turn provide a weekly progress report addressing the Validation Study as a whole to all of the Testing Facilities. Problems and issues shall be resolved in this manner.

***Draft Report***: At the conclusion of Phase II, a draft report of the Phase II test chemical data shall be provided by the Study Director to the designated contacts. The draft report (entitled: *In Vitro Validation Study – Phase II: Qualification Phase for Cytotoxicity Study of Nine Coded Chemicals*) shall include everything noted in Addendum I (Draft Report – Phase II). If the Phase II data does not meet test acceptance criteria, then the Management Team (through the designated contacts)

will work with the Test Facility and lead laboratory to identify problems and make corrections as needed. Once unresolved issues have been resolved, the Validation Study will proceed. The Validation Study will advance to Phase III once all participating laboratories have submitted acceptable draft reports. The draft report shall be submitted in email and five (5) hard copy formats. File attachments in email shall be submitted in Microsoft® Word (or equivalent) and Excel format and all email correspondence shall be copied to the designated contacts. Copies of the unaudited Study Workbook pages may be submitted as attachments in hard copy format.

***Final Report***: Once the draft report provides data that meets test acceptance criteria, then the Project Coordinator shall inform the Study Director to prepare a Quality Assurance audited final report for Phase II. The final report shall be submitted in email and five (5) hard copy formats. File attachments in email shall be submitted in Microsoft® Word (or equivalent) and Excel format and all email correspondence shall be copied to the designated contacts. Copies of the audited Study Workbook pages may be submitted in hard copy format as an attachment to the report. The final report will not need to be completed to continue to Phase III. (See Validation Study timelines in **Section 4.1** and Report submission timelines in **Section 4.5**.)

Any solubility problems/issues with the test chemicals shall be addressed by the lead laboratory and Management Team (through the designated contacts) and resolved at the end of Phase II before proceeding to Phase III.

#### 4.3.2 *Criteria for Advancing to Phase III*

If there is excessive variation of ICx data within or among laboratories in the Validation Study, the lead laboratory/testing facility shall assist the Management Team (through the designated contacts) to determine the cause and recommend appropriate actions needed to reduce the variation. The Statement of Work, Test Method Protocols, and SOPs shall be revised if necessary and testing repeated until acceptable proficiency and reproducibility is achieved in all participating laboratories. The Management Team will decide when all laboratories will advance to the next phase of the Validation Study. A teleconference shall be held with all of the appropriate participants of the Validation Study and the Management Team will relate information concerning the advancement of the Validation Study.

### 4.4 Phase III

#### 4.4.1 *Study Procedures*

Phase III of this Validation Study requires testing 60 blinded/coded chemicals in the same manner as in Phases I and II (i.e., in the *in vitro* cytotoxicity assays in a concentration-response fashion with two - three replicate assays [see Figure 2] after completing a range-finding assay for each chemical). ***The definitive number of replicate assays will be determined based on recommendations of the Management Team and projected costs for doing replicates (see Section 1.4).*** Laboratories will **calculate $IC_{20}$, $IC_{50}$, and $IC_{80}$ values in μg/ml,** calculate confidence limits for each value, and report this and all raw data to the Study Management Team through the designated contacts.

#### 4.4.1.1 ***Reporting Data (Phase III)***

***Biweekly Reports***: Each testing facility will provide a biweekly progress report to the designated contacts of the Management Team (See Addendum I). These reports will be in electronic format (i.e., email with attachments) and will include raw and interim data as the study progresses. The Management Team will in turn provide a weekly progress report addressing the Validation Study as a whole to all of the Testing Facilities. Problems and issues shall be resolved in this manner.

***Draft Report***: At the conclusion of Phase III, a draft report of the Phase III test chemical data shall be provided by the Study Director to the designated contacts. The draft report (entitled: *In Vitro Validation Study – Phase III: Cytotoxicity Study of 60 Coded Chemicals in Rodent and Human Cell Systems*) must include everything noted in Addendum I Draft Report – Phase III). If the Phase III data does not meet test acceptance criteria, then the Management Team (through the designated contacts) will work with the Test Facility and lead laboratory to identify problems and make corrections as needed. Once unresolved issues have been resolved, the Validation Study will proceed. The draft report shall be submitted in email and five (5) hard copy formats. File attachments in email shall be submitted in Microsoft® Word (or equivalent) and Excel format and all email correspondence shall be copied to the designated contacts. Copies of the unaudited Study Workbook pages may be submitted as attachments in hard copy format.

***Final Report***: Once the draft report provides data that meets test acceptance criteria, then the Project Coordinator shall inform the Study Director to prepare a Quality Assurance audited final report for Phase III. The final report shall be submitted in email and five (5) hard copy formats. File attachments in email shall be submitted in Microsoft® Word (or equivalent) and Excel format and all email correspondence shall be copied to the designated contacts. Copies of the audited Study Workbook pages may be submitted in hard copy format as an attachment to the report. (See Validation Study timelines in **Section 4.1** and Report submission timelines in **Section 4.5**.)

### 4.4.2 *Criteria for Completion of Phase III*

Phase III will be complete once all of the test chemicals (60) have been tested and the Study Director provides a final report to the designated contacts. The Validation Study will be complete (for all Testing Facilities) after the Study Management Team has received final reports from each Testing Facility and has statistically analyzed all of the data provided by all Testing Facilities.

## 4.5 Report Submission Timelines

### 4.5.1 *Draft Reports*

Draft reports for each phase shall be submitted to the Management Team through the designated contacts as per **Section 4.1.1**. The Management Team will respond to the Test Facility within two – four weeks after receipt of the report. If data are acceptable, then the Management Team (through the designated contacts) will instruct the Test Facility to continue to the next phase (teleconference with all participants). If the data do

not meet the criteria and adjustments to the Validation Study are needed, a new timeline will be created and relayed to the Test Facility.

#### 4.5.2 *Final Report*

Once the Management Team (through the designated contacts) declares to a Test Facility that the Validation Study testing phase is complete, then the Test Facility shall provide a final report (electronic and hard copy) for the identified phase of the Validation Study to the Management Team through the designated contacts as per **Section 4.1.1**.

## 5.0 IDENTIFICATION OF TEST CHEMICALS AND CONTROL SUBSTANCES

The NIEHS/NTP designated contractor (BioReliance) will supply all test chemicals and the positive control to all Testing Facilities. Phase I chemicals will be shipped as a unit as will the Phase II chemicals. Phase III chemicals will be shipped as one unit of 60 chemicals. The Management Team will have all pertinent information for each chemical (e.g., purity, CAS #, supplier, etc.) and will make all decisions concerning any questions about or problems/issues with the chemicals.

### 5.1 Test Chemicals

#### 5.1.1 *Range of Toxicities*

The chemicals proposed for the Validation Study are representative of a range of toxicities and are relevant with regard to human exposure potential. The test chemicals will represent each of the Globally Harmonized System (GHS) classification groups for rat oral LD50s: ≤ 5 mg/kg, >5 ≤ 50 mg/kg, >50 ≤ 300 mg/kg, >300 ≤ 2000 mg/kg, >2000 ≤ 5000 mg/kg, and >5000 mg/kg (OECD, 2001).

#### 5.1.2 *Receipt of Chemicals*

Test chemicals will be packaged so as to minimize damage during transit and will be shipped to the Testing Facility according to proper regulatory procedures. Chemicals are to be packaged and shipped so as to conceal their identities. The Study Management Team and the Testing Facility shall be notified by the contractor (BioReliance) when the test chemicals are shipped so as to prepare for receipt.

Upon receipt at the facility, the test chemicals shall be stored in appropriate storage conditions as per recommendations provided by the contractor (BioReliance). The Testing Facility shall immediately notify the Project Coordinator and the contractor about receipt of chemicals. The blinded/coded test chemicals as well as a sealed health and safety information package will be shipped to the Safety Officer. The Safety Officer shall retain the package and pass the test chemicals to the Study Director. The package will contain necessary information about the chemical hazards and provide instructions for emergency actions. A disclosure key for identifying test chemicals by code will also be included. At the end of the Validation Study, the Safety Officer shall return the unopened health and safety package to the contractor (BioReliance) who supplied the chemicals (through the designated contacts). If the health and safety package must be opened by the laboratory, the Safety Officer shall immediately notify the designated contacts.

If regulatory transportation requirements dictate that each package must display a list of the chemicals it contains on the outside of the package, the list can be removed by shippers before delivery to the participating Testing Facility. If shippers have not

removed this information, the Safety Officer shall remove it prior to passing the chemicals to the Study Director.

**5.1.3** ***Test Chemical Information for the Study Director***
Each test chemical will be accompanied by data sheets giving a minimum of essential information, including color, odor, physical state, weight or volume of sample, specific density for liquid test chemicals, and storage instructions (which will be the same for each chemical). The Study Director shall receive this information.

## 5.2 Control Materials

### 5.2.1 *Vehicle Control (VC)*

**5.2.1.1** ***3T3 NRU Assay (VC)***
Dulbecco's Modification of Eagle's Medium (DMEM) buffered with sodium bicarbonate and supplemented with (final concentrations in DMEM are quoted): 5 % NBCS, 4 mM Glutamine, 100 IU Penicillin, 100 µg/ml Streptomycin. (See specifics in Test Method Protocol) [Note: Vehicle control may also be known as negative control.]

**5.2.1.2** ***NHK NRU Assay (VC)***
A modified MCDB 153 formulation such as Clonetics® Keratinocyte Basal Medium (KBM®) supplemented with**:** 0.1 ng/ml Human recombinant epidermal growth factor, 5 g/ml Insulin, 0.5 g/ml Hydrocortisone, 50 g/ml Gentamicin, 50 ng/ml Amphotericin B, 0.1 mM Calcium, 2 ml 7.5 mg/ml Bovine pituitary extract. (See specifics in Test Method Protocol) [Note: Vehicle control may also be known as negative control.]

### 5.2.2 *Positive Control (PC)*
Sodium Lauryl Sulfate ([SLS], CAS # 151-21-3) will be the positive control for both assays. A dose-response assay of SLS dilutions will be run in one plate for each set of test chemical assays. There will be no PC in the test chemical assay plates.

## 5.3 Inventory of Test Chemicals
The amount of test chemical received, the amount used for specific tests, and the amount remaining shall be documented by the Testing Facility.

## 5.4 Disposition of Test Chemicals
After the studies are completed, the remaining test chemicals will be returned to the contractor (BioReliance) or appropriately disposed of by the Testing Facility.

## 5.5 Handling of Test Chemicals
Appropriate routine safety procedures shall be followed in handling the test chemicals unless the contractor (BioReliance) otherwise specifies more cautious procedures. Test Facility personnel shall be instructed to treat all blinded/coded test chemicals as ***very hazardous and potentially carcinogenic*** and to dispose of laboratory wastes as toxic wastes. The health and safety information package provided to the Testing Facility Safety Officer shall be examined by the Testing Facility only in an emergency/need-to-know situation.

### 5.6 Determination of Purity, Composition, and Stability of Test Chemicals

The contractor (BioReliance) will be responsible for collecting information on the analytical purity, composition, and stability of the test chemicals and the positive control material from manufacturer and supplier documentation. The contractor will provide information on chemical homogeneity in the vehicle via solubility studies. Chemicals shall be stored in an appropriate manner as stated by the contractor.

## 6.0 TEST SYSTEM

All testing procedures and data analyses shall follow the Test Method Protocols and Statement of Work provided by the Management Team which are based on the NIEHS Publication # 01-4500, *Guidance Document on Using In Vitro Data to Estimate In Vivo Starting Doses for Acute Toxicity* (ICCVAM, 2001a).

### 6.1 Neutral Red Uptake (NRU) Cytotoxicity Assay

#### 6.1.1 *Background*

The NRU cytotoxicity assay procedure is a cell survival/viability chemosensitivity assay based on the ability of viable cells to incorporate and bind neutral red (NR), a supravital dye. NR is a weak cationic dye that readily penetrates cell membranes by non-ionic diffusion and accumulates intracellularly in lysosomes. Alterations of the cell surface or the sensitive lysosomal membrane lead to lysosomal fragility and other changes that gradually become irreversible. Such changes brought about by the action of xenobiotics result in a decreased uptake and binding of NR. It is thus possible to distinguish between viable, damaged, or dead cells, which is the basis of this assay.

Healthy mammalian cells, when maintained in culture, continuously divide and multiply over time. A toxic chemical, regardless of site or mechanism of action, will interfere with this process and result in a reduction of the growth rate as reflected by cell number. Cytotoxicity is expressed as a concentration dependent reduction of the uptake of the NR after chemical exposure, thus providing a sensitive, integrated signal of both cell integrity and growth inhibition.

#### 6.1.2 *Sterility of the Test System*

All cell culture applications shall be conducted under aseptic conditions. The test system shall be deemed free of mycoplasmal, fungal, and/or bacterial contamination. The cell suppliers ship cryopreserved cells that have been tested for mycoplasma and are deemed mycoplasma-free. If mycoplasma contamination is suspected, then the Testing Facility shall have the cells tested in an appropriate manner. If mycoplasma is present, all old cells of the specific lot of cells shall be eliminated and new cell stocks shall be prepared or purchased. The presence of bacterial or fungal contamination in the cultures shall be determined by gross visual inspection during and at the conclusion of each assay. If bacterial or fungal contamination is present in the cultures, the Study Director shall determine the course of action.

## 7.0 EXPERIMENTAL DESIGN AND METHODOLOGY – 3T3 NRU ASSAY

### 7.1 Major Steps in the Performance of the Assay

BALB/c 3T3 cells are seeded into 96-well plates and maintained in culture for 24 hours (h) (~ 1 doubling period) to form a semi-confluent monolayer

⇓

Remove culture medium

⇓

Cells are then exposed to the test chemical in treatment medium over a range of 8 concentrations for 48 h exposure

⇓

Microscopic evaluation of morphological alterations

⇓

Remove treatment medium; wash once with PBS; add Neutral Red (NR) medium; incubate for 3 h.

⇓

Discard NR medium; wash once with PBS; add NR desorbing fixative

⇓

Shake plate for 20 minutes

⇓

Detect NR Absorption at optical density (OD) 540nm

⇓

Perform Neutral Red Uptake data calculations (% viability; calculations of $IC_{20}$, $IC_{50}$, and $IC_{80}$ values)

### 7.2 Procedures for Conducting the Test

All testing procedures and data analyses shall follow the Test Method Protocols and Statement of Work provided by the Management Team and SOPs produced by the Testing Facility. All deviations from Statement of Work or SOPs shall be documented in the Study Workbook. The following abbreviated descriptions of the SOPs provide an overview of the assay, but must not be used in place of the formal SOPs.

#### 7.2.1 *Cell Maintenance and Culture Procedures*

Ampules of cryopreserved BALB/c 3T3 cells are quickly thawed in a 37°C water bath. The cells are resuspended in cell culture medium and transferred to cell culture flasks. The thawed cells are incubated at 37°C in a 90 % humidified 5.0 % $CO_2$ atmosphere. Cells are passaged two to three times before using them in a cytotoxicity test. A fresh batch of cryopreserved cells should be thawed out approximately every two months (See **Section 7.2.1.1**). This period resembles a sequence of about 18 passages.

The cells are routinely grown as a monolayer in tissue culture grade flasks, at 37°C in a 90 % humidified atmosphere of 5.0 % $CO_2$ and are examined on a daily basis under a phase contrast microscope.

When cells approach a predetermined confluency, they must be detached from the flask by trypsinization, resuspended in culture medium, and counted using a hemocytometer or cell counter. After determination of cell number, the cell culture must be sub-cultured into other flasks or seeded into 96-well microtiter plates. Stocks of BALB/c 3T3 cells are

prepared in a medium with DMSO as a cryoprotective agent and stored in sterile, freezing tubes in a liquid nitrogen freezer for long-term storage.

**7.2.1.1** ***Cryopreserved Lots of Cells***
After the initial establishment of the 3T3 cells in culture from an ampule of cryopreserved cells (from the cell supplier), laboratory personnel shall grow enough cells for cryopreservation in a number of freeze tubes (e.g., 10 – 20 tubes). These tubes will form the stock pool from which subsequent cultures will be established for use in the assays (See **Section 7.2.1**).

**7.2.1.2** ***Determination of Cell Doubling Time***
A cell doubling time procedure shall be performed on the initial lot of cells that will be used in the first cell culture assays of Phase Ia of the Validation Study. The doubling time only needs to be determined again if there is a change in the lot of cells used. The Test Method Protocol will provide the basic procedures for this determination.

## 8.0 EXPERIMENTAL DESIGN AND METHODOLOGY – NHK NRU ASSAY

### 8.1 Major Steps in the Performance of the Assay

NHK cells are seeded into 96-well plates and maintained in culture for 24 – 72 hours (h) to form a semi-confluent (30 – 50 %) monolayer

⇓

Remove culture medium

⇓

Cells are then exposed to the test chemical in treatment medium over a range of 8 concentrations for 48 h exposure

⇓

Microscopic evaluation of morphological alterations

⇓

Remove treatment medium; wash once with PBS; add Neutral Red (NR) medium; incubate for 3 h.

⇓

Discard NR medium; wash once with PBS; add NR desorbing fixative

⇓

Shake plate for 20 minutes

⇓

Detect NR Absorption at optical density (OD) 540nm

⇓

Perform Neutral Red Uptake data calculations (% viability; calculations of $IC_{20}$, $IC_{50}$, and $IC_{80}$ values)

### 8.2 Procedures for Conducting the Test

All testing procedures and data analyses shall follow the Test Method Protocols and Statement of Work provided by the Management Team and SOPs produced by the Testing Facility. All deviations from the Statement of Work or SOPs shall be documented in the Study Workbook. The following abbreviated descriptions of the SOPs provide an overview of the assay, but must not be used in place of the formal SOPs. Information specific to the keratinocytes as provided by the supplier (e.g., Clonetics) shall be considered when preparing SOPs.

**8.2.1** ***Cell Maintenance and Culture Procedures***
Ampules of cryopreserved NHK cells are quickly thawed in a 37°C water bath. The cells are resuspended in cell culture medium and transferred to cell culture flasks. The thawed cells are incubated at 37°C in a 90 % humidified 5.0 % $CO_2$ atmosphere. NHK cells will be sustained in culture through only one passage after establishing cells in culture.

The cells are routinely grown as a monolayer in tissue culture grade flasks, at 37°C in a 90 % humidified atmosphere of 5.0 % $CO_2$ and are examined on a daily basis under a phase contrast microscope.

When cells approach a predetermined confluency, they must be detached from the flask by trypsinization, resuspended in culture medium, and counted using a hemocytometer or cell counter. After determination of cell number, the cell culture must be seeded into 96-well microtiter plates.

**8.2.1.1** ***Determination of Cell Doubling Time***
A cell doubling time procedure shall be performed on the initial lot of cells that will be used in the first cell culture assays of Phase Ia of the Validation Study. The doubling time only needs to be determined again at the initiation of the cells in culture if there is a change in the lot of cells used. The Test Method Protocol will provide the basic procedures for this determination.

## 9.0 PREPARATION AND DELIVERY OF TEST CHEMICAL

### 9.1 Preparation of Test Chemical
The test chemical must be freshly prepared immediately prior to use. All chemicals shall be weighed on a calibrated balance (including liquid test chemicals) and added to the appropriate solvent (**Section 9.1.1**). Test chemicals must be at room temperature before dissolving and diluting. Preparation under red or yellow light may be necessary, if rapid photodegradation is likely to occur. The solutions must not be cloudy nor have noticeable precipitate.

The following hierarchy (culture medium, DMSO, ethanol) shall be followed for dissolving the test chemical.

**9.1.1.** ***Dissolving the Test Chemical***

**9.1.1.1** ***Treatment Medium/Routine Culture Medium)***
a) Dissolve test chemical in Treatment Medium [3T3] or Routine Culture Medium [NHK] (See Test Method Protocols).
b) Gently mix. Vortex (1 –2 minutes).
c) If test chemical hasn't dissolved, use sonication (up to five minutes).
d) If sonication doesn't work, then warm solution to 37°C.

**9.1.1.2** ***DMSO***
If the test chemical doesn't dissolve in the Treatment Medium/Routine Culture Medium, then follow steps a) through d) in **Section 9.1.1.1** using DMSO instead of Treatment Medium/Routine Culture Medium.

**9.1.1.3** ***Ethanol***

If the test chemical doesn't dissolve in DMSO, then follow steps a) through d) in **Section 9.1.1.1** using ethanol instead of DMSO.

**9.1.2.** ***Test Chemical Solubility***

Each test chemical will be prepared such that the highest test concentration in each range finding experiment is 100 mg/ml (100,000 μg/ml) in culture medium (10 mg/ml [10,000 μg/ml] in culture medium if DMSO or ethanol is used as a solvent). If the range finding experiment shows that 100,000 μg/ml is not high enough for the $IC_{50}$ values in the range to meet the acceptance criteria, then higher concentrations will be used for the definitive experiment.

Solubility of the test chemical will be determined by following a modified version of EPA Product Properties Test Guidelines OPPTS 830.7840 (EPA, 1998). (See Test Method Protocols).

Dissolve the test chemical (at 200-fold the desired final concentration in the case of solvents) in an appropriate solvent. The final solvent (i.e., DMSO or ethanol) concentration should be kept at a constant level of no more than 0.5 % (v/v) in the vehicle controls and in all of the eight test concentrations (i.e., each concentration shall have the same amount of solvent). This means the test chemical is dissolved in the vehicle first, and then 1 part of this stock solution is added to 199 parts of sterile pre-warmed (37°C) medium. Check carefully to determine whether the chemical is still dissolved after the transfer from solvent stock solution to medium, and reduce the highest test concentration, if necessary.

The test chemicals selected for the Validation Study will be soluble. If an appropriate concentration cannot be achieved for the range finding experiments, then the Study Director shall contact the Study Management Team through the designated contacts. Prior to initiating any test chemical assay (and after performing solubility tests on the chemicals), the Study Director shall contact the Study Management Team (through the designated contacts) for discussion of the solvent to be used for test chemical application. The Management Team will provide direct guidance to the Study Director as to which solvent will be used for the assay.

**9.1.3** ***pH of Dilutions***

Measure the pH (using pH paper) of the highest concentration of the test chemical to be tested in the assay. Document the pH and note the color of the medium. Do not adjust the pH of the test chemical solutions.

**9.2 Delivery of Test Chemical**

The test chemical will be administered by direct addition (pipetting) to the 96-well microtiter plate with a vehicle compatible with the test system. The cells will be exposed to the test chemical for approximately 48 hours..

[Note: The 3T3 and NHK cells in the 96-well plate will have freshculture medium on the cells immediately prior to dosing with the test chemical. Each well will receive a volume of test chemical concentration therefore diluting the concentration by a factor of two.]

### 9.3 Range Finder Experiment

Test eight concentrations of the test chemical by diluting the stock solution with a constant factor. The initial dilution series will be log dilutions (i.e., 1:10, 1:100, 1:1000, etc.). If this dilution series meets test acceptance criteria (**Section 11.0**), then the range finding experiment dilutions can be used as the actual dilutions in the separate definitive test chemical experiment. If the dilution factor needs to be adjusted for the actual definitive experiment, then follow dilution schemes provided in **Section 9.4.**

### 9.4 Test Chemical Dilutions

a) A factor of $^{2}\sqrt{10} = 3.16$ could be used for covering a large range:
(e.g., 1 ⇒3.16 ⇒10 ⇒31.6 ⇒100 ⇒316 ⇒1000 ⇒3160 µg/ml).

b) The simplest geometric concentration series (i.e., constant dilution / progression factor) are **dual geometric series** (e.g., a factor of 2). These series have the disadvantage of numerical values that permanently change between logs of the series:
(e.g., *log0*-2, 4, 8; *log1*- 16, 32, 64; *log2*- 128, 256, 512; *log3*- 1024, 2048,).

c) The **decimal geometric series**, first described by Hackenberg and Bartling (1959) for use in toxicological and pharmacological studies, has the advantage that independent experiments with wide or narrow dose factors can be easily compared because they share identical concentrations. Furthermore, under certain circumstances, experiments can even be merged together:

EXAMPLE:

| | | | | | | | | | | | | |
|---|---|---|---|---|---|---|---|---|---|---|---|---|
| **10** | | | | | | **31.6** | | | | | | **100** |
| **10** | | | | **21.5** | | | | **46.4** | | | | **100** |
| **10** | | **14.7** | | **21.5** | | **31.6** | | **46.4** | | **68.1** | | **100** |
| **10** | **12.1** | **14.7** | **17.8** | **21.5** | **26.1** | **31.6** | **38.3** | **46.4** | **56.2** | **68.1** | **82.5** | **100** |

The dosing factor of **3.16** (= $^{2}\sqrt{10}$) divides a log into two equidistant steps, a factor of **2.15** (= $^{3}\sqrt{10}$) divides a decade into three steps. The factor of **1.47** (= $^{6}\sqrt{10}$) divides a log into six equidistant steps, and the factor of **1.21** (= $^{12}\sqrt{10}$) divides the log into 12 steps.

For an easier biometrical evaluation of several related concentration response experiments use decimal geometric concentration series rather than dual geometric series. The technical production of decimal geometric concentration series is simple. An example is given for factor 1.47:

*Dilute 1 volume of the highest concentration by adding 0.47 volumes of diluent. After equilibration dilute 1 volume of this solution by adding 0.47 volumes of diluent...(etc.).*

d) Determine which test chemical concentration is closest to the $IC_{50}$ value (e.g., 50 % cytotoxicity). Use that value as the central concentration and adjust dilutions higher and lower in equal steps for the definitive assay.

## 10.0 DATA COLLECTION

### 10.1 Nature of Data to be Collected

After the test is performed and the NR is desorbed from the cells, measure the absorption of the resulting colored solution at 540 nm in a microtiter spectrophotometric plate reader, using the blanks as a reference. Save raw data in the file format provided by the Study Management

Team (Microsoft® Excel template [Addendum II]) for further analysis of the concentration-response (% viability calculations). Data from the OD analyses will be used for the calculation of $IC_{20}$, $IC_{50}$, and $IC_{80}$ values (µg/ml).

### 10.2 Type of Media Used for Data Storage

Originals of the raw data (the Study Workbook and computer printouts of absorbance readings from the plate reader) and copies of other raw data such as instrument logs shall be collected and archived at the end of the Validation Study (under the direction of the Study Director), according to GLP-compliant procedures. The electronic files of plate reader data and any derived data shall be saved, and a backup of these electronic files shall be produced and maintained. Calculations to convert the raw data to derived data shall be performed using Microsoft® Excel (Addendum II). The derived assay data that are stored electronically shall be periodically copied, and backup files shall be produced and maintained.

### 10.3 Documentation

Original raw data that shall be collected shall include but are not limited to the following:

- Data recorded in the Study Workbook, which shall consist of all recordings of all activities related to preparing the 3T3 and NHK cultures and test chemicals and performing the NRU assay;
- Computer printouts of absorbance readings from the plate reader spectrophotometer;
- Other data collected as part of GLP compliance
  - Equipment logs
  - Equipment calibration records
  - Test chemical logs
  - Cryogenic freezer inventory logs
  - Cell culture media preparation logs

Addendum IV provides examples of equipment logs.

## 11.0 ACCEPTANCE CRITERIA FOR NRU ASSAYS

### 11.1 Test Acceptance Criteria

The test method protocols provide the definitive test acceptance criteria which include a specific mean $OD_{540}$ of all vehicle controls, a set percent difference of the mean $OD_{540}$ between two sets of vehicle controls, and a set range of the $IC_{50}$ for SLS.

The Study Director shall decide if a test meets acceptance criteria and the Study Management Team will make decisions concerning re-testing of test chemicals.

### 11.2 $IC_{50}$ Acceptance Criteria

The $IC_{50}$ derived from the concentration-response assays shall be based on at least <u>three responses</u> that are ≥ 10 % and ≤ 90 % inhibition of NRU. If this is not the case, and the concentration progression factor can be easily reduced, the experiment shall be rejected and a retest shall be performed with a smaller progression factor.

The raw data output from the plate reader shall be converted into the derived data using Microsoft® Excel (Addendum II). The PC and VC from each assay shall be compared to the acceptable historical ranges as noted. If the assay is found to be valid by these criteria, then the data from that assay is considered to be acceptable. If the PC or VC values are not acceptable,

the assay shall be repeated. Results of all assays, acceptable and failed, shall be forwarded to the designated contacts via the previously identified reports.

## 12.0 EVALUATION OF TEST RESULTS

### 12.1 Cell Viability Determination

A calculation of cell viability expressed as NRU is made for each concentration of the test chemical by using the mean NRU of the six replicate values (minimum of four acceptable replicate wells) per test concentration. The Study Director shall determine if any wells do not meet expected performance criteria through visual microscopic evaluation (i.e., experimental conditions within the wells are compromised due to situations such as insufficient cell population, mechanical disruption of the monolayer, etc.). The Study Director shall decide if any of the wells of the plate need to be excluded from data analyses. If a concentration does not have a minimum of four replicate wells, then data from that concentration will not used. The test may still be acceptable if all criteria in **Section 11.1** are met (e.g., the $IC_{50}$ derived from the concentration-response assays is backed by at least three responses ≥ 10 % and ≤ 90 % inhibition of NRU.) If any wells have bacterial or fungal contamination, the entire plate must be repeated.

The cell viability value is compared with the mean NRU of all VC values (provided VC values have met the VC acceptance criteria). Relative cell viability is then expressed as percent of untreated VC. If achievable, the eight concentrations of each chemical tested will span the range of no effect up to total inhibition of cell viability.

### 12.2 $IC_X$ Determination

The concentration of a test chemical reflecting a 20 %, 50 %, and 80 % inhibition of cell viability (i.e., the $IC_{20}$, $IC_{50}$, and $IC_{80}$) is determined from the concentration-response and shall be done by applying a Hill function to the concentration-response data. It will not be necessary for the Testing Facilities to derive the equation. The Testing Facility shall calculate the $IC_{20}$, $IC_{50}$, and $IC_{80}$ values for each test chemical and the confidence limits for each value using statistical software (e.g., GraphPad PRISM® 3.0) specified by the Study Management Team. In addition, the Study Management Team shall provide guidelines for calculating ICx values and confidence limits. The Testing Facility shall report data using at least three (3) significant figures and shall forward the results from each assay to the Study Management Team/biostatistician through the designated contacts in electronic format and hard copy upon completion of all testing. The Study Management Team will be directly responsible for the statistical analyses of the Validation Study data.

*Hill function*: a four-parameter logistic mathematical model relating the concentration of test chemical to the response being measured in a sigmoidal shape.

$$Y = \text{Bottom} + \frac{\text{Top} - \text{Bottom}}{1 + 10^{(\text{logIC50} - X)\text{HillSlope}}}$$

where Y= response, X is the logarithm of dose (or concentration), Bottom is the minimum response, Top is the maximum response, logIC50 is logarithm of X at the response midway between Top and Bottom, and HillSlope describes the steepness of the curve.

## 13.0 DRAFT AND FINAL REPORTS

A draft report shall be submitted to the Management Team through the designated contacts at the completion of each study phase (Ia, Ib, II, III). A Final Report for each phase of the Validation Study shall be prepared by the Testing Facility, signed by the Study Director, and provided to the Management Team through the designated contacts upon acceptance of data provided in the corresponding draft report. The submitted results shall accurately describe all methods used for generation and analysis of the data, provide a complete record of the preparation of test chemicals, and present any relevant data necessary for the assessment of the results (See Addendum I).

## 14.0 RECORDS AND ARCHIVES

At the end of the Validation Study, the original raw and derived assay data, as well as copies of other raw data not exclusive to this Validation Study (instrument logs, calibration records, facility logs, etc.), shall be submitted to NIEHS/NICEATM for storing and archiving according to the facility's SOP and in compliance with GLP Standards.

Originals of all raw and derived data, or copies where applicable, shall be stored and archived at NIEHS/NICEATM.

Copies of all raw and derived data shall be stored and archived at the participating Testing Facility for at least five years after completion of the Validation Study.

## 15.0 ALTERATIONS OF THE STATEMENT OF WORK

No changes in the Statement of Work shall be made without the consent of the Management Team. A Statement of Work Amendment detailing any change(s) and the basis for the change(s) shall be approved and prepared by the Study Director, and the amendment shall be signed and dated by the Study Director and the NIEHS representative. The amendment shall be retained with the original Statement of Work.

## 16.0 REFERENCES

Clonetics Normal Human Keratinocyte Systems Instructions for Use, AA-1000-4-Rev.03/00. (http://www.clonetics.com).

Cooper-Hannan, R., J.W. Harbell, S. Coecke, M. Balls, G. Bowe, M., Cervinka, R. Clothier, F. Hermann, L.K. Klahm, J. de Lange, M. Liebsch and P. Vanparys. 1999. The Principles of Good Laboratory Practice: application to in vitro toxicology studies. The Report and Recommendations of the ECVAM Workshop 37. ATLA. 27 (4). July/August. Pp. 539 – 577.

EPA Product Properties Test Guidelines. OPPTS 830.7840. Water Solubility: Column Elution Method; Shake Flask Method. United States Environmental Protection Agency. Prevention, Pesticides and Toxic Substances (7101). EPA 712-C-98-041. March 1998.

Halle, W. 1998. Toxizitätsprüfungen in Zellkulturen für eine Vorhersage der akuten Toxizität ($LD_{50}$) zur Einsparung von Tierversuchen. Life Sciences/ Lebenswissenschaften, Volume 1, 94 pp., Jülich: Forschungszentrum Jülich.

ICCVAM (Interagency Coordinating Committee on the Validation of Alternative Methods). 2001a. Guidance document on using *in vitro* data to estimate *in vivo* starting doses for acute toxicity NIH publication 01-4500. NIEHS, Research Triangle Park, North Carolina. http://iccvam.niehs.nih.gov/methods/invidocs/guidance/iv_guide.pdf

ICCVAM (Interagency Coordinating Committee on the Validation of Alternative Methods). 2001b. Report of the international workshop on *in vitro* methods for assessing acute systemic toxicity. NIH Publication 01-4499. NIEHS, Research Triangle Park, North Carolina. http://iccvam.niehs.nih.gov/methods/invidocs/finalall.pdf

National Toxicological Program, September 2000, Attachment 2 revised. Specifications for the Conduct of Studies to Evaluate the Toxic and Carcinogenic Potential of Chemical, Biological and Physical Agents in Laboratory Animals for the National Toxicology Program (NTP).

NICEATM (The National Toxicology Program [NTP] Interagency Center for the Evaluation of Alternative Toxicological Methods). 2001. Test Method Protocol for the BALB/c 3T3 Neutral Red Uptake Cytotoxicity Test. A Test for Basal Cytotoxicity for an *In Vitro* Validation Study.

NICEATM (The National Toxicology Program [NTP] Interagency Center for the Evaluation of Alternative Toxicological Methods). 2001. Test Method Protocol for the Normal Human Keratinocyte [NHK] Neutral Red Uptake Cytotoxicity Test. A Test for Basal Cytotoxicity for an *In Vitro* Validation Study.

OECD (Organisation for Economic Co-operation and Development). 2001. Harmonised Integrated Classification System for Human Health and Environmental Hazards of Chemical Substances and Mixtures as Endorsed by the 28th Joint Meeting of the Chemicals Committee and the Working Party on Chemicals in November 1998, Part 2, p.21. OECD, Paris. http://www.oecd.org/ehs/class/HCL6htm.

OECD (Organisation for Economic Co-operation and Development). 1998. Organisation for Economic Cooperation and Development series on Principles of Good Laboratory Practice and compliance monitoring. Number 1. OECD Principles on Good Laboratory Practice (as reused in 1997), OECD. Environmental Health and Safety Publications, Environment Directorate: ENV/MC/CHEM(98) 17. Paris, France: OECD.

OECD (Organisation for Economic Co-operation and Development). 1992. Environment Monograph No 50, Series on Principles of Good Laboratory Practice and Compliance Monitoring: Number 6, The Application of the GLP Principles to Field Studies. Paris, France: OECD.

Spielmann, H., S. Gerner, S. Kalweit, R. Moog, T. Wirnserberger, K. Krauser, R. Kreiling, H. Kreuzer, N.P. Luepke, H.G. Miltenburger, N. Müller, P. Murmann, W. Pape, B. Siegmund, J. Spengler, W. Steiling, and F.J. Wiebel. 1991. Interlaboratory assessment of alternatives to the Draize eye irritation test in Germany. Toxicol. *In Vitro* 5: 539-542.

Triglia, D., P.T. Wegener, J. Harbell, K. Wallace, D. Matheson, and C. Shopsis. 1989. Interlaboratory validation study of the keratinocyte neutral red bioassay from Clonetics Corporation. In *Alternative Methods in Toxicology*, Volume 7. A.M. Goldberg, ed., pp. 357-365. Mary Ann Liebert, Inc., New York.

## 17.0 APPROVAL OF STATEMENT OF WORK

| | |
|---|---|
| _____ | _____ |
| **Sponsor Representative** | **Date** |
| _____ | _____ |
| **Testing Facility Management** | **Date** |

# ADDENDUM I

## SUGGESTED REPORT FORMAT

## TITLE PAGE

- **Study Title**
  - Draft/Final Report 1: *In Vitro Validation Study – Phase Ia: Development of a Positive Control Database in Rodent and Human Cell Systems*
  - Draft/Final Report 2: *In Vitro Validation Study – Phase Ib: Training Phase for Cytotoxicity Study of Three Coded Chemicals in Rodent and Human Cell Systems*
  - Draft/Final Report 3: *In Vitro Validation Study – Phase II: Qualification Phase for Cytotoxicity Study of Nine Coded Chemicals in Rodent and Human Cell Systems*
  - Draft/Final Report 4: *In Vitro Validation Study – Phase III: Cytotoxicity Study of 60 Coded Chemicals in Rodent and Human Cell Systems*

- ***In Vitro* Assay**
  - Identify the assays: 3T3 NRU and NHK NRU

c) **Test Articles**
- Draft/Final Report 1: (Phase Ia) identify the positive control chemical
- Draft/Final Report 2: (Phase Ib) identify the three (3) test chemicals
- Draft/Final Report 3: (Phase II) identify the nine (9) test chemicals
- Draft/Final Report 4: (Phase III) identify the sixty (60) test chemicals

- **Authors**
- **Study Completion Date**
- **Testing Facility**
- **Validation Study Number/Identification**

## ADDENDUM I (cont.)

### SUGGESTED REPORT FORMAT

### SIGNATURE PAGE

- **Validation Study Initiation Date**
  Date Protocol was signed by Study Director
- **Initiation Date of Laboratory Studies**
  Actual laboratory start date
- **Validation Study Completion Date**
  Date report signed by Study Director
- **Sponsor Representative**
  The National Institute of Environmental Health Sciences (NIEHS)
  The National Toxicology Program (NTP) Interagency Center for the Evaluation of Alternative Toxicological Methods (NICEATM)

  NICEATM
  79 T.W. Alexander Drive
  Bldg. 4401, MD-EC-17
  3rd Floor, Room 3126
  P.O. Box 12233
  Research Triangle Park, NC 27709
- **Study Management Team Representatives**
  Judy Strickland, Ph.D. (Project Coordinator)
  Michael Paris (Assistant Project Coordinator)
- **Testing Facility**
  Name and address
- **Archive Location**
  Name and address
- **Study Director**
  Name and signature and date
- **Key Personnel**
  Laboratory technicians, QA Director, Safety Officer
- **Facility Management**
  Name
- **Scientific Advisor**
  Name

# ADDENDUM I (cont.)

## SUGGESTED REPORT FORMAT

## TEST CHEMICAL RECEIPT PAGE

### Test Chemical Receipt Reporting Template for *In Vitro* Validation Study

| Test Facility Test Chemical Identification Number | Sponsor Test Chemical Identification Number | Test Chemical Physical Description | Storage Conditions | Test Chemical Receipt Date | Test Chemical Received By | Comments |
|---|---|---|---|---|---|---|
| | | | | | | |
| | | | | | | |
| | | | | | | |
| | | | | | | |
| | | | | | | |
| | | | | | | |
| | | | | | | |
| | | | | | | |
| | | | | | | |
| | | | | | | |
| | | | | | | |
| | | | | | | |

# ADDENDUM I (cont.)

## SUGGESTED REPORT FORMAT

## DRAFT/FINAL REPORT 1

***In Vitro Validation Study – Phase Ia: Development of a Positive Control Database in Rodent and Human Cell Systems***

- **Table of Contents**
- **Objectives:** The reports shall provide specific objectives
- **Description of the Test System Used:** Description of 3T3 NRU assay and the NHK NRU assay
- **Summary of the Findings:** Referenced to the raw data where appropriate; Include all information for range finding experiments
- **Narrative Description of the Assays:** Describe any problems that were encountered and how such problems were solved. Justifications for solvents used for each test chemical will be included in the description. Deviations from the protocols, SOPs, and/or the Statement of Work shall be addressed in this section. Copies of appropriate sections of the Study Workbook shall be included with the report as attachments. The draft report will include unaudited Study Workbook pages. The final report will include a copy of the audited Study Workbook with a statement (signed and dated by the Study Director) on the front of it stating that it is an exact copy of the original audited workbook.
- **Statement Signed by the Study Director:** Confirm that the Validation Study was conducted in compliance with GLP (or indicating where the Study deviated from GLP), or for non GLP-compliant laboratories, confirm that the Validation Study adhered to the spirit of GLP. Confirm that the report fully and accurately reflects the raw data generated in the Validation Study.
- **Quality Assurance Statement: (For Final Report only)**
- For GLP-Compliant Laboratories: QA Statement identifying: 1) the phases and data inspected, 2) dates of inspection, and 3) dates findings were reported to the Study Director and Testing Facility management. The QA Statement shall identify whether the methods and results described in the Final Report accurately reflect the raw data produced during the Validation Study.
- For Non GLP-Compliant Laboratories: A statement from the Testing Facility shall be included with the Final Report of Phase III. This statement shall identify whether the methods and results described in the Final Report accurately reflect the raw data produced during the Validation Study and provide assurance that all testing was done in the spirit of GLP.
- **Data Analysis:** (for each NRU assay) calculate the % viability for each positive control chemical concentration (eight concentrations per assay); determine the $IC_{50}$ values for the positive control in each assay; follow guidelines/procedures in Statement of Work and Test Method Protocols.
- **Other Information: (All copies of printouts, documents, and spreadsheets will be noted as exact duplicates of the data.)**
  - Copies of spectrometric plate reader raw data
  - Copies of the completed Microsoft® Excel spreadsheets (Addendum II) used for calculation of cytotoxicity values
  - Copies of data pages showing $IC_{50}$ calculations for the positive control
  - Copy of the protocols
  - Deviations to the protocols, SOPs, and Statement of Work
  - Revisions/amendments to the protocols, SOPs, and Statement of Work

# ADDENDUM I (cont.)

## SUGGESTED REPORT FORMAT

## DRAFT/FINAL REPORT 2

***In Vitro Validation Study – Phase Ib: Training Phase for Cytotoxicity Study of Three Coded Chemicals in Rodent and Human Cell Systems***

- **Table of Contents**

- **Objectives:** The reports shall provide specific objectives

- **Description of the Test System Used:** Description of 3T3 NRU assay and the NHK NRU assay

- **Summary of the Findings:** Referenced to the raw data where appropriate; Include all information for range finding experiments

- **Narrative Description of the Assays:** Describe any problems that were encountered and how such problems were solved. Justifications for solvents used for each test chemical shall be included in the description. Deviations from the protocols, SOPs, and/or the Statement of Work shall be addressed in this section. Copies of appropriate sections of the Study Workbook shall be included with the report as attachments. The draft report will include unaudited Study Workbook pages. The final report will include a copy of the audited Study Workbook with a statement (signed and dated by the Study Director) on the front of it stating that it is an exact copy of the original audited workbook.

- **Statement Signed by the Study Director**: Confirm that the Validation Study was conducted in compliance with GLP (or indicating where the Study deviated from GLP), or for non GLP-compliant laboratories, confirm that the Validation Study adhered to the spirit of GLP. Confirm that the report fully and accurately reflects the raw data generated in the Validation Study.

- **Quality Assurance Statement: (For Final Report only)**
- For GLP-Compliant Laboratories: QA Statement identifying: 1) the phases and data inspected, 2) dates of inspection, and 3) dates findings were reported to the Study Director and Testing Facility management. The QA Statement shall identify whether the methods and results described in the Final Report accurately reflect the raw data produced during the Validation Study.
- For Non GLP-Compliant Laboratories: A statement from the Testing Facility shall be included with the Final Report of Phase III. This statement shall identify whether the methods and results described in the Final Report accurately reflect the raw data produced during the Validation Study and provide assurance that all testing was done in the spirit of GLP.

- **Data Analysis:** (for each assay) calculate the % viability for the positive control and each test chemical concentration (eight concentrations per assay); determine the $IC_{50}$ value for the positive control; determine the $IC_{20}$, $IC_{50}$, and $IC_{80}$ values (and confidence limits) for each of the three (3) test chemicals.

- **Other Information: (All copies of printouts, documents, and spreadsheets shall be noted as exact duplicates of the data.)**
  - Copies of spectrometric plate reader raw data
  - Copies of the completed Microsoft® Excel spreadsheets (Addendum II) used for calculation of cytotoxicity values

- Copies of data pages showing $IC_{50}$ calculations for the positive control and the $IC_{20}$, $IC_{50}$, and $IC_{80}$ values (and confidence limits) for each test chemical
- Copy of the protocols
- Deviations to the protocols, SOPs, and Statement of Work
- Revisions/amendments to the protocols, SOPs, and Statement of Work

# ADDENDUM I (cont.)

## SUGGESTED REPORT FORMAT

## DRAFT/FINAL REPORT 3

***In Vitro Validation Study – Phase II: Qualification Phase for Cytotoxicity Study of Nine Coded Chemicals in Rodent and Human Cell Systems***

- **Table of Contents**

- **Objectives:** The reports shall provide specific objectives

- **Description of the Test System Used:** Description of 3T3 NRU assay and the NHK NRU assay

- **Summary of the Findings:** Referenced to the raw data where appropriate; Include all information for range finding experiments

- **Narrative Description of the Assays:** Describe any problems that were encountered and how such problems were solved. Justifications for solvents used for each test chemical will be included in the description. Deviations from the protocols, SOPs, and/or the Statement of Work shall be addressed in this section. Copies of appropriate sections of the Study Workbook shall be included with the report as attachments. The draft report will include unaudited Study Workbook pages. The final report will include a copy of the audited Study Workbook with a statement (signed and dated by the Study Director) on the front of it stating that it is an exact copy of the original audited workbook.

- **Statement Signed by the Study Director:** Confirm that the Validation Study was conducted in compliance with GLP (or indicating where the Study deviated from GLP), or for non GLP-compliant laboratories, confirm that the Validation Study adhered to the spirit of GLP. Confirm that the report fully and accurately reflects the raw data generated in the Validation Study.

- **Quality Assurance Statement: (For Final Report only)**
- For GLP-Compliant Laboratories: QA Statement identifying: 1) the phases and data inspected, 2) dates of inspection, and 3) dates findings were reported to the Study Director and Testing Facility management. The QA Statement shall identify whether the methods and results described in the Final Report accurately reflect the raw data produced during the Validation Study.
- For Non GLP-Compliant Laboratories: A statement from the Testing Facility shall be included with the Final Report of Phase III. This statement shall identify whether the methods and results described in the Final Report accurately reflect the raw data produced during the Validation Study and provide assurance that all testing was done in the spirit of GLP.

- **Data Analysis:** (for each assay) calculate the % viability for the positive control and each test chemical concentration (eight concentrations per assay); determine the $IC_{50}$ value for the positive control; determine the $IC_{20}$, $IC_{50}$, and $IC_{80}$ values (and confidence limits) for each of the nine (9) test chemicals.

- **Other Information: (All copies of printouts, documents, and spreadsheets shall be noted as exact duplicates of the data.)**
  - Copies of spectrometric plate reader raw data
  - Copies of the completed Microsoft® Excel spreadsheets (Addendum II) used for calculation of cytotoxicity values

- Copies of data pages showing $IC_{50}$ calculations for the positive control and the $IC_{20}$, $IC_{50}$, and $IC_{80}$ values (and confidence limits) for each test chemical
- Copy of the protocols
- Deviations to the protocols, SOPs, and Statement of Work
- Revisions/amendments to the protocols, SOPs, and Statement of Work

# ADDENDUM I (cont.)

## SUGGESTED REPORT FORMAT

## DRAFT/FINAL REPORT 4

- ***In Vitro Validation Study – Phase III: Cytotoxicity Study of 60Coded Chemicals in Rodent and Human Cell Systems***
- **Table of Contents**

- **Objectives:** The draft report shall provide specific objectives

- **Description of the Test System Used:** Description of 3T3 NRU assay and the NHK NRU assay

- **Summary of the Findings:** Referenced to the raw data where appropriate; Include all information for range finding experiments

- **Narrative Description of the Assays:** Describe any problems that were encountered and how such problems were solved. Justifications for solvents used for each test chemical shall be included in the description. Deviations from the protocols, SOPs, and/or the Statement of Work shall be addressed in this section. Copies of appropriate sections of the Study Workbook shall be included with the report as attachments. The draft report will include unaudited Study Workbook pages. The final report will include a copy of the audited Study Workbook with a statement (signed and dated by the Study Director) on the front of it stating that it is an exact copy of the original audited workbook.

- **Statement Signed by the Study Director:** Confirm that the Validation Study was conducted in compliance with GLP (or indicating where the Study deviated from GLP), or for non GLP-compliant laboratories, confirm that the Validation Study adhered to the spirit of GLP. Confirm that the report fully and accurately reflects the raw data generated in the Validation Study.

- **Quality Assurance Statement: (For Final Report only)**
- For GLP-Compliant Laboratories: QA Statement identifying: 1) the phases and data inspected, 2) dates of inspection, and 3) dates findings were reported to the Study Director and Testing Facility management. The QA Statement shall identify whether the methods and results described in the Final Report accurately reflect the raw data produced during the Validation Study.
- For Non GLP-Compliant Laboratories: A statement from the Testing Facility shall be included with the Final Report of Phase III. This statement shall identify whether the methods and results described in the Final Report accurately reflect the raw data produced during the Validation Study and provide assurance that all testing was done in the spirit of GLP.

- **Data Analysis:** (for each assay) calculate the % viability for the positive control and each test chemical concentration (eight concentrations per assay); determine the $IC_{50}$ value for the positive control; determine the $IC_{20}$, $IC_{50}$, and $IC_{80}$ values (and confidence limits) for each of the 60 (or 30) test chemicals.

- **Other Information: (All copies of printouts, documents, and spreadsheets shall be noted as exact duplicates of the data.)**
  - Copies of spectrometric plate reader raw data
  - Copies of the completed Microsoft® Excel spreadsheets (Addendum II) used for calculation of cytotoxicity values

- Copies of data pages showing $IC_{50}$ calculations for the positive control and the $IC_{20}$, $IC_{50}$, and $IC_{80}$ values (and confidence limits) for each test chemical
- Deviations to the protocols, SOPs, and Statement of Work
- Copy of the protocols
- A list of all SOPs used by the laboratory for the assays (SOP title and laboratory identification code)
- The Statement of Work and The Test Method Protocols

## ADDENDUM I (cont.)

### SUGGESTED REPORT FORMAT

## BIWEEKLY REPORTS

**Testing Facility:**

**Chemicals Received:**

**Chemicals Tested:**
**3T3 NRU Assay:**
**NHK NRU Assay:**

**Solubility Determinations: (solvents used and concentrations obtained)**

**Range Finding Experiments: (number performed; outcomes)**

**Successful Tests: (number of tests and calculated $IC_{20}$, $IC_{50}$, and $IC_{80}$ values; include Excel® spreadsheets)**

**Failed Tests: (number of failed tests and reasons for failure)**

**Problems Encountered/Resolutions:**

**Projected Testing Schedule:**

# ADDENDUM II
## EXCEL SPREADSHEET TEMPLATE FOR ASSAY DATA

| | | | | | | | | | | | | |
|---|---|---|---|---|---|---|---|---|---|---|---|---|
| Test Facility | dfdgs | | | Cell Line/Type | | 3T3 | | | | | | |
| Chemical Code | 4567 | | | Vehicle Contol | | 0.5% DMSO | | | | | | |
| Plate ID | qa789 | | | | | | | | | | | |
| Date Read | ###### | | | | | | | | | | | |
| | **Plate Map** | | | | | | | | | | | |
| | 1 | 2 | 3 | 4 | 5 | 6 | 7 | 8 | 9 | 10 | 11 | 12 |
| A | Blank | Blank | Blank | Blank | Blank | Blank | Blank | Blank | Blank | Blank | Blank | Blank |
| B | Blank | VC 1 | Conc 1 | Conc 2 | Conc 3 | Conc 4 | Conc 5 | Conc 6 | Conc 7 | Conc 8 | VC2 | Blank |
| C | Blank | VC 1 | Conc 1 | Conc 2 | Conc 3 | Conc 4 | Conc 5 | Conc 6 | Conc 7 | Conc 8 | VC2 | Blank |
| D | Blank | VC 1 | Conc 1 | Conc 2 | Conc 3 | Conc 4 | Conc 5 | Conc 6 | Conc 7 | Conc 8 | VC2 | Blank |
| E | Blank | VC 1 | Conc 1 | Conc 2 | Conc 3 | Conc 4 | Conc 5 | Conc 6 | Conc 7 | Conc 8 | VC2 | Blank |
| F | Blank | VC 1 | Conc 1 | Conc 2 | Conc 3 | Conc 4 | Conc 5 | Conc 6 | Conc 7 | Conc 8 | VC2 | Blank |
| G | Blank | VC 1 | Conc 1 | Conc 2 | Conc 3 | Conc 4 | Conc 5 | Conc 6 | Conc 7 | Conc 8 | VC2 | Blank |
| H | Blank | Blank | Blank | Blank | Blank | Blank | Blank | Blank | Blank | Blank | Blank | Blank |
| | **Plate Data** | | | | | | | | | | | |
| | 1 | 2 | 3 | 4 | 5 | 6 | 7 | 8 | 9 | 10 | 11 | 12 |
| A | 0.004 | 0.006 | 0.036 | 0.004 | 0.028 | 0.019 | 0.023 | 0.029 | 0.012 | 0.003 | 0.004 | 0.011 |
| B | 0.009 | 0.832 | 0.832 | 0.855 | 0.780 | 0.755 | 0.693 | 0.419 | 0.265 | 0.052 | 0.832 | 0.008 |
| C | 0.014 | 0.894 | 0.894 | 0.916 | 0.884 | 0.83 | 0.73 | 0.368 | 0.213 | 0.105 | 0.935 | 0.012 |
| D | -0.006 | 0.918 | 0.918 | 0.87 | 0.914 | 0.835 | 0.806 | 0.450 | 0.270 | 0.098 | 0.918 | 0.009 |
| E | -0.004 | 0.915 | 0.915 | 0.826 | 0.903 | 0.879 | 0.73 | 0.591 | 0.295 | 0.086 | 0.915 | 0.015 |
| F | -0.004 | 1.098 | 1.098 | 0.984 | 0.814 | 0.952 | 0.746 | 0.436 | 0.201 | 0.151 | 1.098 | 0.014 |
| G | 0.016 | 0.948 | 0.948 | 0.845 | 0.842 | 0.832 | 0.663 | 0.431 | 0.319 | 0.09 | 0.89 | 0.015 |
| H | -0.001 | -0.006 | 0.017 | -0.005 | 0.009 | 0.004 | 0.002 | 0.014 | -0.013 | -0.003 | -0.061 | 0.012 |
| **Mean blank OD** | 0.0068 | | | | | | | | | | | |
| | **Corrected OD = OD- mean blank OD** | | | | | | | | | | | |
| | 1 | 2 | 3 | 4 | 5 | 6 | 7 | 8 | 9 | 10 | 11 | 12 |
| A | | | | | | | | | | | | |
| B | | 0.825 | 0.825 | 0.848 | 0.773 | 0.748 | 0.686 | 0.412 | 0.258 | 0.045 | 0.825 | |
| C | | 0.887 | 0.887 | 0.909 | 0.877 | 0.823 | 0.723 | 0.361 | 0.206 | 0.098 | 0.928 | |
| D | | 0.911 | 0.911 | 0.863 | 0.907 | 0.828 | 0.799 | 0.443 | 0.263 | 0.091 | 0.911 | |
| E | | 0.908 | 0.908 | 0.819 | 0.896 | 0.872 | 0.723 | 0.584 | 0.288 | 0.079 | 0.908 | |
| F | | 1.091 | 1.091 | 0.977 | 0.807 | 0.945 | 0.739 | 0.429 | 0.194 | 0.144 | 1.091 | |
| G | | 0.941 | 0.941 | 0.838 | 0.835 | 0.825 | 0.656 | 0.420 | 0.312 | 0.083 | 0.883 | |
| H | | | | | | | | | | | | |
| | **blanks** | **Vehicle Control 1** | **Conc 1** | **Conc 2** | **Conc 3** | **Conc 4** | **Conc 5** | **Conc 6** | **Conc 7** | **Conc 8** | **Vehicle Control 2** | **blanks** |
| **Concentration [µg/ml]** | | 0 | 1000 | 500 | 250 | 125 | 62.5 | 31.25 | 15.625 | 7.2 | 0 | |
| **Mean Corrected OD** | | 0.927 | 0.927 | 0.876 | 0.849 | 0.840 | 0.721 | 0.442 | 0.254 | 0.090 | 0.925 | |
| **SD of Mean OD** | 0.0158 | 0.089 | 0.089 | 0.058 | 0.053 | 0.065 | 0.049 | 0.075 | 0.046 | 0.032 | 0.089 | |
| **Corrected Mean ------** | **All VCs** | 0.926 | | | | | | | | | | |
| **% Viability = Mean Corrected OD/Mean Corrected VC** | 100% | 100% | 100% | 95% | 92% | 91% | 78% | 48% | 27% | 10% | 100% | |
| **SD (% Viability) = SD OD/Mean OD All VCs** | | 10% | 10% | 6% | 6% | 7% | 5% | 8% | 5% | 3% | 10% | |
| **%CV = SD/mean OD*100** | 9% | 9.6% | 9.6% | 6.6% | 6.3% | 7.7% | 6.8% | 17.0% | 18.1% | 35.7% | 9.7% | |
| Mean Vehicle Control - VC1 (%) | | -0.15% | | | | | | | | | | |
| Mean Vehicle Control - VC2 (%) | | 0.15% | | | | | | | | | | |

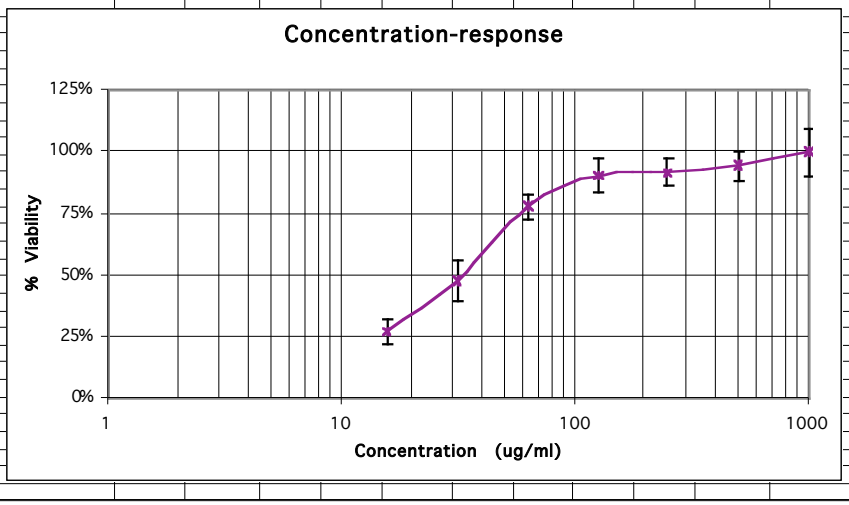

# ADDENDUM III

## SUGGESTED STANDARD TEST REPORTING TEMPLATE FOR *IN VITRO* VALIDATION STUDY WORKBOOK

| **TEST CHEMICAL** | | | | | | | | |
|---|---|---|---|---|---|---|---|---|
| Test Facility | | | 96-Well Plate ID _____ | | | | | |
| Chemical Code | | | Experiment ID _____ | | | | | |
| **PREPARATION OF TEST CHEMICAL** | | | | | | | | |
| Solvent _____Culture Medium _____DMSO _____Ethanol | | | | | | | | |
| Highest Percent Solvent (v/v) in Dilutions _____% | | | Highest Concentration Tested_____µg/ml | | | | | |
| Aids Used to Dissolve _____Vortex _____Ultra-sonicaton _____Heat to 37°C | | | | | | | | |
| pH (Highest Test Concentration)_____ Media color of test chemical solutions: | | | | | | | | |
| Concentration Series (µg/ml) | C1 | C2 | C3 | C4 | C5 | C6 | C7 | C8 |
| Positive Control [SLS]_____µg/ml | | | Vehicle Control _____% solvent | | | | | |
| **CELL LINE/TYPE** | | | | | | | | |
| Name | Supplier | | From Cell Lot No._____ | | | | | |
| Total Passage No. | No. of Passages after Thawing | | From:____ proliferating ____frozen | | | | | |
| **CELL CULTURE CONDITIONS** | | | | | | | | |
| Name of Medium | Supplier/ID | | Lot No./Lab I.D. | | | | | |
| Name of Serum | Supplier/ID | | Lot No. | | | | | |
| Serum Concentration | During Growth: _____% | | During Exposure: _____% | | | | | |
| **TEST ACCEPTANCE CRITERIA** | | | | | | | | |
| VC: Mean Absolute $OD_{540}$ | | | Mean OD =_____ | ____Accept | ____Reject | | | |
| VC: Difference Between Col.2 and Col. 10 | | | Difference =_____% | ____Accept | ____Reject | | | |
| PC: $IC_{50}$ of Concurrent SLS Test | | | $IC_{50}$ =_____µg/ml | ____Accept | ____Reject | | | |
| **TIMELINE** | | | | | | | | |
| Assay Start Date (cells to plates) | Application of Test Chemical Date | | NRU/$OD_{540}$ Measurement Date | | | | | |

# ADDENDUM IV

## EXAMPLES OF LABORATORY EQUIPMENT LOGS

**INCUBATOR**

**INCUBATOR I.D._____**

**MONTH:_____ YEAR:_____ LOCATION:_____**

| DATE | TIME | INITIALS | $CO_2$ % | RH % | TEMP. ($^{O}$C.) | $CO_2$ TANK (PSI) | $CO_2$ TANK (NEW) |
|---|---|---|---|---|---|---|---|
| 1 | | | | | | | |
| 2 | | | | | | | |
| 3 | | | | | | | |
| 4 | | | | | | | |
| 5 | | | | | | | |
| 6 | | | | | | | |
| 7 | | | | | | | |
| 8 | | | | | | | |
| 9 | | | | | | | |
| 10 | | | | | | | |
| 11 | | | | | | | |
| 12 | | | | | | | |
| 13 | | | | | | | |
| 14 | | | | | | | |
| 15 | | | | | | | |
| 16 | | | | | | | |
| 17 | | | | | | | |
| 18 | | | | | | | |
| 19 | | | | | | | |
| 20 | | | | | | | |
| 21 | | | | | | | |
| 22 | | | | | | | |
| 23 | | | | | | | |
| 24 | | | | | | | |
| 25 | | | | | | | |
| 26 | | | | | | | |
| 27 | | | | | | | |
| 28 | | | | | | | |
| 29 | | | | | | | |
| 30 | | | | | | | |
| 31 | | | | | | | |

**FYRITE CHECK OF CO2:**

**ADDITION OF WATER:**

**TOTAL INCUBATOR DISINFECTION:**

## ADDENDUM IV (cont.)

### EXAMPLES OF LABORATORY EQUIPMENT LOGS

**pH METER**

**pH METER I.D._____**

**MONTH:_____ YEAR:_____ LOCATION:_____**

| DATE | TIME | INITIALS | pH STD. 7.00 | pH STD. 10.00 | pH STD. 4.00 | pH STD. 7.40 | SLOPE |
|---|---|---|---|---|---|---|---|
| 1 | | | | | | | |
| 2 | | | | | | | |
| 3 | | | | | | | |
| 4 | | | | | | | |
| 5 | | | | | | | |
| 6 | | | | | | | |
| 7 | | | | | | | |
| 8 | | | | | | | |
| 9 | | | | | | | |
| 10 | | | | | | | |
| 11 | | | | | | | |
| 12 | | | | | | | |
| 13 | | | | | | | |
| 14 | | | | | | | |
| 15 | | | | | | | |
| 16 | | | | | | | |
| 17 | | | | | | | |
| 18 | | | | | | | |
| 19 | | | | | | | |
| 20 | | | | | | | |
| 21 | | | | | | | |
| 22 | | | | | | | |
| 23 | | | | | | | |
| 24 | | | | | | | |
| 25 | | | | | | | |
| 26 | | | | | | | |
| 27 | | | | | | | |
| 28 | | | | | | | |
| 29 | | | | | | | |
| 30 | | | | | | | |
| 31 | | | | | | | |
| pH STANDARDS | | 7.00 | 10.00 | 4.00 | 7.40 | | |
| SUPPLIER/I.D. | | | | | | | |
| LOT NUMBER | | | | | | | |
| EXPIRATION DATE | | | | | | | |

**NOTES:**

## ADDENDUM IV (cont.)

### EXAMPLES OF LABORATORY EQUIPMENT LOGS

| MONTH_____<br>YEAR_____ | | | RERIGERATOR<br>I.D. NUMBER_____<br>LOCATION_____ | FREEZER<br>I.D. NUMBER_____<br>LOCATION_____ |
|---|---|---|---|---|
| DATE | TIME | INITIALS | TEMPERATURE ($^{O}$C.) | TEMPERATURE ($^{O}$C.) |
| 1 | | | | |
| 2 | | | | |
| 3 | | | | |
| 4 | | | | |
| 5 | | | | |
| 6 | | | | |
| 7 | | | | |
| 8 | | | | |
| 9 | | | | |
| 10 | | | | |
| 11 | | | | |
| 12 | | | | |
| 13 | | | | |
| 14 | | | | |
| 15 | | | | |
| 16 | | | | |
| 17 | | | | |
| 18 | | | | |
| 19 | | | | |
| 20 | | | | |
| 21 | | | | |
| 22 | | | | |
| 23 | | | | |
| 24 | | | | |
| 25 | | | | |
| 26 | | | | |
| 27 | | | | |
| 28 | | | | |
| 29 | | | | |
| 30 | | | | |
| 31 | | | | |
| NOTES: | | | | |

# ADDENDUM V

## SUGGESTED STANDARD TEST REPORTING TEMPLATE FOR STUDY WORKBOOK

## [1]SOLUBILITY TESTING
**Test Chemicals for the *In Vitro* Validation Study**

Study No._____

Test Chemical_____ Test Chemical Code_____ CAS #_____

Physical Description_____ Liquid Density_____

Solubility Determined by_____
Date_____

| Solvent | Amount of Test Chemical | Volume Added | Total Volume | pH and medium color | Vortex (V) Sonication (S) Heating-37°C (H) | Comments |
|---|---|---|---|---|---|---|
| Treatment Medium (3T3 NRU) | | 0.1ml | | | | |
| | | 0.5ml | | | | |
| | | 1.0ml | | | | |
| Routine Culture Medium (NHK NRU) | | 0.1ml | | | | |
| | | 0.5ml | | | | |
| | | 1.0ml | | | | |
| DMSO | | 0.1ml | | | | |
| | | | | | | |
| | | | | | | |
| Ethanol | | 0.1ml | | | | |
| | | | | | | |
| | | | | | | |

Reference Color of Treatment Medium_____

Reference Color of Routine Culture Medium_____

Balance I.D._____
Treatment Medium and Routine Culture Medium: minimum concentration of 100mg/ml.
DMSO and Ethanol: minimum concentration of 1000mg/ml.

[1] Adaptation of Institute of In Vitro Sciences (IIVS) form – 350 [2/2002]

# ADDENDUM VI

## GANTT CHART OF STUDY TIMELINES AND DELIVERABLES

| **In Vitro Cytotoxicity Validation Study** | | | MARCH 2002 | APRIL 2002 | MAY 2002 | JUNE 2002 | JULY 2002 | AUGUST 2002 | SEPTEMBER 2002 | OCTOBER 2002 | NOVEMBER 2002 | DECEMBER 2002 | JANUARY 2003 | FEBRUARY 2003 | MARCH 2003 | APRIL 2003 | MAY 2003 | JUNE 2003 | JULY 2003 | AUGUST 2003 | SEPTEMBER 2003 | OCTOBER 2003 | NOVEMBER 2003 | DECEMBER 2003 |
|---|---|---|---|---|---|---|---|---|---|---|---|---|---|---|---|---|---|---|---|---|---|---|---|---|
| **TASK** | **START** | **FINISH** | | | | | | | | | | | | | | | | | | | | | | |
| Statement of Work Issued by NIEHS | | 3/29/02 | 29 | | | | | | | | | | | | | | | | | | | | | |
| Proposal received | | 5/10/02 | | | 10 | | | | | | | | | | | | | | | | | | | |
| Contracts Awarded | | 6/29/02 | | | | 29 | | | | | | | | | | | | | | | | | | |
| Submission of Study Protocol, CVs of Key Personnel, and SOPs | | 7/12/02 | | | | | 12 | | | | | | | | | | | | | | | | | |
| Phase Ia Positive control | 7/29/02 | 8/26/02 | | | | | July 29 Aug. 26 | | | | | | | | | | | | | | | | | |
| Phase Ia Draft Report | | 9/9/02 | | | | | Sept. 9 | | | | | | | | | | | | | | | | | |
| Phase Ia Final Report | | 11/11/02 | | | | | Nov. 11 | | | | | | | | | | | | | | | | | |
| Phase Ib 3 chemicals | 9/26/02 | 10/29/02 | | | | | | | Sept. 26 Oct. 29 | | | | | | | | | | | | | | | |
| Phase Ib Draft Report | | 11-11/02 | | | | | | | Nov. 11 | | | | | | | | | | | | | | | |
| Phase Ib Final Report | | 1/13/03 | | | | | | | Jan. 13 | | | | | | | | | | | | | | | |
| Phase II 9 chemicals | 12/2/02 | 2/10/03 | | | | | | | | | | Dec. 2 Feb. 10 | | | | | | | | | | | | |
| Phase II Draft Report | | 2/25/03 | | | | | | | | | | Feb. 25 | | | | | | | | | | | | |
| Phase II Final Report | | 4/28/03 | | | | | | | | | | April 28 | | | | | | | | | | | | |
| Phase III 60 chemicals | 3/26/03 | 12/9/03 | | | | | | | | | | | | | Mar. 26 Dec. 9 | | | | | | | | | |
| Phase III Draft Report | | 10/24/03 | | | | | | | | | | | | | Oct. 24 | | | | | | | | | |
| Phase III Final Report | | 12/9/03 | | | | | | | | | | | | | Dec. 9 | | | | | | | | | |
| Biweekly Reports | 7/10/02 | 12/9/03 | | | | July 10, 2002 – December 9, 2003 | | | | | | | | | | | | | | | | | | |

***[This Page Intentionally Left Blank]***

# Appendix G2

## Procedures for Acquisition, Preparation, Solubility Testing, and Distribution of Test Chemicals for a Validation Study for *In Vitro* Basal Cytotoxicity Testing

***[This Page Intentionally Left Blank]***

***NOTE: This Statement of Work shall not be cited, quoted, nor distributed to any Testing Facility participating in the In Vitro Validation Study. Confidentiality must be maintained to ensure that test chemicals remain unknown to the Testing Facilities.***

# STATEMENT OF WORK

## Procedures for Acquisition, Preparation, Solubility Testing, and Distribution of Test Chemicals for a Validation Study for *In Vitro* Basal Cytotoxicity Testing

**April 26, 2002**
**Revision 1: May 8, 2002**
**Revision 2: June 21, 2002**
**Revision 3: September 17, 2002**
**Revision 4: October 11, 2002**
Prepared by

The National Toxicology Program (NTP) Interagency Center for the Evaluation of Alternative Toxicological Methods (NICEATM)

National Institute of Environmental Health Sciences (NIEHS)
National Institutes of Health (NIH)
U.S. Public Health Service
Department of Health and Human Services

## Table of Contents

1.0 PROJECT OBJECTIVES AND GENERAL REQUIREMENTS ..... 62
1.1 Project Objectives ..... 62
1.2 Response to the Statement of Work ..... 62
1.2.1 General Capabilities ..... 62
1.3 Guidelines ..... 63
1.4 Definitions ..... 63
2.0 ORGANIZATION ..... 63
2.1 Validation Study Sponsors ..... 63
2.2 Management Team ..... 64
2.2.1 Project Management and Chemical Distribution Team ..... 64
2.2.2 Contract Management ..... 64
2.2.3 Study Management Team ..... 64
2.2.3.1 NIEHS/NICEATM ..... 64
2.2.3.2 ECVAM ..... 64
2.2.4 Testing Facilities ..... 64
3.0 CONTRACTOR AND KEY PERSONNEL ..... 65
3.1 Contractor ..... 65
3.1.1 Personnel ..... 65
3.1.1.1 Facility Management ..... 65
3.1.1.2 Study Director ..... 65
3.1.1.3 Quality Assurance (QA) Director ..... 65
3.1.1.4 Scientific Advisor(s) ..... 66
3.1.1.5 Laboratory Technician(s) ..... 66
3.1.1.6 Safety Officer ..... 66
3.1.2 Facilities, Equipment, and Supplies ..... 66
3.1.2.1 Laboratory ..... 66
3.1.2.2 Equipment ..... 66
3.1.2.3 Supplies ..... 66
3.1.3 Health and Safety ..... 67
3.1.4 Quality Assurance ..... 67
4.0 TEST PHASES AND SCHEDULE ..... 67
4.1 Study Timeline ..... 67
4.2 Deliverables ..... 68
4.3 *In Vitro* Validation Study Phases ..... 69
4.4 Report Submission Timelines ..... 69
4.4.1 Draft Reports ..... 69
4.4.2 Final Report ..... 69
5.0 ACQUISITION, PREPARATION, AND DISTRIBUTION OF TEST CHEMICALS ..... 69
5.1 Test Chemicals ..... 69
5.1.1 Range of Toxicities ..... 69
5.1.2 Procurement of Test Chemicals ..... 70
5.1.3 Dispensing Chemicals ..... 70
5.1.4 Shipment of Chemicals ..... 70
5.1.5 Receipt of Chemicals by the Testing Facilities ..... 71
5.1.6 Test Chemical Information for the Study Director ..... 71
5.2 Handling of Test Chemicals ..... 71
5.3 Determination of Purity, Composition, and Stability of Test Chemicals ..... 71
6.0 SOLUBILITY DETERMINATION OF TEST CHEMICALS ..... 71
6.1 Cell Culture Media and Control Material ..... 72
6.1.1 Test Chemical Medium Solvents ..... 72

6.1.1.1 ~~Treatment~~ Chemical Dilution[3] Medium (BALB/c 3T3 NRU) ..... 72
6.1.1.2 Routine Culture Medium (NHK NRU) ..... 72
6.1.2 Positive Control (PC) ..... 73
6.2 Preparation of Test Chemical ..... 73
6.2.1 Dissolving the Test Chemical ..... 73
6.2.1.1 ~~Treatment~~ Chemical Dilution[3] Medium/Routine Culture Medium) ..... 75
6.2.1.2 DMSO ..... 75
6.2.1.3 Ethanol ..... 75
6.2.2 pH of Solutions ..... 76
7.0 DATA COLLECTION ..... 76
7.1 Nature of Data to be Collected ..... 76
7.1.1 Solubility Studies ..... 76
7.1.2 Chemical Information ..... 76
7.2 Type of Media Used for Data Storage ..... 76
7.3 Documentation ..... 77
8.0 DRAFT AND FINAL REPORTS ..... 77
9.0 RECORDS AND ARCHIVES ..... 77
10.0 ALTERATIONS OF THE STATEMENT OF WORK ..... 77
11.0 REFERENCES ..... 77
12.0 APPROVAL OF STATEMENT OF WORK ..... 78
ADDENDUM I ..... 79
ADDENDUM II ..... 83
ADDENDUM III ..... 84
ADDENDUM IV ..... 8~~69~~
ADDENDUM V ..... *88*~~91~~

**<u>NOTE</u>: Revisions in this document are identified by footnotes, strike-out text (i.e., ~~deleted~~), and added verbiage (i.e., *italicized text*).**

[3] Revised 9/17/02

# STATEMENT OF WORK

# Procedures for Acquisition, Preparation, Solubility Testing, and Distribution of Test Chemicals for a Validation Study for *In Vitro* Basal Cytotoxicity Testing

## 1.0 PROJECT OBJECTIVES AND GENERAL REQUIREMENTS

### 1.1 Project Objectives

This Statement of Work outlines and supports the procedures that the Contractor will initiate for the acquisition, preparation, solubility testing, and distribution of the test chemicals needed to perform two *in vitro* basal cytotoxicity assays (the BALB/c 3T3 Neutral Red Uptake [NRU] assay and the Normal Human Keratinocyte [NHK] Neutral Red Uptake [NRU] assay) for a multi-laboratory Validation Study. These assays, recommended in *Guidance Document On Using In Vitro Data To Estimate In Vivo Starting Doses For Acute Toxicity* (ICCVAM, 2001), use mammalian cell culture techniques to assess the basal cytotoxicity of chemicals.

A primary goal of this Validation Study is to evaluate the usefulness of the BALB/c 3T3 Neutral Red Uptake (NRU) and the Normal Human Keratinocyte (NHK) NRU assays for reducing and refining animal use for acute oral toxicity determinations of chemicals by predicting starting doses for *in vivo* rodent acute lethality assays.

The proposed Validation Study will determine $IC_{20}$, $IC_{50}$, and $IC_{80}$ values for a test set of 72 chemicals with varying degrees of toxicity. This set of chemicals was selected separate and prior to this Statement of Work by the Study Management Team. The basis for selection of this test set is discussed in the Study Design document prepared by the Study Management Team.

The Contractor shall perform the following activities:

- Acquire 73 high quality and high purity (99% or greater when economically feasible) chemicals from reputable commercial sources
- Perform solubility tests on all chemicals using solvents and procedures that have been recommended to the test laboratories
- Repackage chemicals into multiple smaller units
- Code chemicals with a unique identification number so that chemicals can be provided to testing laboratories in a blinded fashion
- Distribute chemicals and health and safety information to the Testing Facilities
- Provide draft and final reports of these activities.

### 1.2 Response to the Statement of Work

Proposals submitted in response to this Statement of Work shall include:

a) A Work Plan
b) A timetable for project milestones
c) A cost estimate based on chemical acquisition, performance of solubility tests for all test chemicals, chemical coding, repackaging, and distribution to two U. S labs and one U. K. lab.

#### 1.2.1 *General Capabilities*

The Contractor shall be capable of performing the following:

a) Prepare/provide Standard Operating Procedures (SOPs) for the performance of the activities outlined in **Section 1.1** (see **Section 1.4** – Definitions - SOPs)

b) Perform all aspects of the Test Chemical Preparation in accordance with Good Laboratory Practices (GLP).
c) Adhere to this Statement of Work throughout the Validation Study.

### 1.3 Guidelines

The Project Officer and/or her/his representatives (e.g., Study Management Team) may inspect and audit the Contractor to ensure that the Project Officer's minimum requirements and guidelines are being followed.

### 1.4 Definitions

**Blinded/Coded Chemicals:** Test chemicals supplied to the Testing Facilities that are coded and distributed by the Contractor such that only the Project Officer, Management Team, and the Contractor have knowledge of the contents of each test chemical vessel. The test chemicals will be purchased, aliquoted, coded, and distributed by the Contractor under the guidance of the NIEHS/NTP Project Officer and the Management Team.

**Contractor:** Facility that will initiate the acquisition, preparation, solubility testing, and distribution of the test chemicals needed to perform two *in vitro* basal cytotoxicity assays for a multi-laboratory *in vitro* Validation Study.

**Good Laboratory Practices (GLPs):** Regulations governing the conduct, procedures, and operations of toxicology laboratories; regulations to assure the quality and integrity of the data and to address such matters as organization and personnel, facilities, equipment, facility operations, test chemicals, and study protocol (Statement of Work) and conduct (U.S. Food and Drug Administration, Title 21 CFR Part 58; Environmental Protection Agency, Title 40 CFR Part 160).

**Standard Operating Procedures (SOPs):** Written documents that describe, in great detail, the routine procedures to be followed for a specific operation, analysis, or action; consistent use of an approved SOP ensures conformance with organizational practices, reduced work effort, reduction in error occurrences, and improved data comparability, credibility, and defensibility; SOPs also serve as resources for training and for ready reference and documentation of proper procedures;

**Statement of Work:** A description of test chemical preparation required for the *in vitro* Validation Study; defines all phases of the Validation Study and the purpose of the procedures; provides the details of test chemical acquisition, preparation, solubility testing, and distribution; provides guidance for the preparation of reports

**Testing Facility:** A laboratory that has been designated to participate in the *In Vitro* Validation Study; facilities identified in **Section 2.2.4**.

## 2.0 ORGANIZATION

### 2.1 Validation Study Sponsors

- National Institute of Environmental Health Sciences (NIEHS)
- The National Toxicology Program (NTP) Interagency Center for the Evaluation of Alternative Toxicological Methods (NICEATM)
- U.S. Environmental Protection Agency (U.S. EPA)
- The European Centre for the Validation of Alternative Methods (ECVAM).

## 2.2 Management Team

### 2.2.1 *Project Management and Chemical Distribution Team*

Ms. Molly Vallant (NIEHS) – NIEHS Project Officer for BioReliance, Inc.
NIEHS
MD E1-03
P.O. BOX 12233
RTP, NC 27709

Dr. Martin L. Wenk (BioReliance, Inc.) – Chemical acquisition, preparation, solubility testing, and distribution
BioReliance Corporation
14920 Broschart Road
Rockville, Maryland 20850-3349

### 2.2.2 *Contract Management*

Ms. Jackie Osgood (NIEHS) – Contracting Officer
Mr. Don Gula (NIEHS) – Contracting Officer

### 2.2.3 *Study Management Team*

#### 2.2.3.1 ***NIEHS/NICEATM***

Dr. William S. Stokes (NICEATM/NIEHS) – Co-chair – Study Management Team
Dr. Judy Strickland (NICEATM/ILS) – Project Coordinator
Mr. Michael Paris (NICEATM/ILS) – Assistant Project Coordinator
Dr. Ray Tice (NICEATM/ILS) – Technical Advisor

NICEATM
79 T.W. Alexander Drive
Bldg. 4401, MD-EC-17
3rd Floor, Room 3126
P.O. Box 12233
Research Triangle Park, NC 27709

#### 2.2.3.2 ***ECVAM***

Professor Michael Balls – Co-chair – Study Management Team
Dr. Silvia Casati
Dr. Andrew Worth

European Commission
Joint Research Centre
Institute for Health and Consumer Protection
Management Support Unit - TP 202
I-21020 Ispra (VA) - Italy

### 2.2.4 *Testing Facilities*

XXX, Safety Officer
Institute for *In Vitro* Sciences (IIVS)
21 Firstfield Road
Suite 220
Gaithersburg, MD 20878

Bill Cappuccio, Safety Officer
5183 Blackhawk Rd
E3330/Room 278
Aberdeen Proving Ground-EA, MD 21010
410-436-7462

Rodger Dainty, Safety Officer
School of Biomedical Sciences
University of Nottingham Medical School
Queen's Medical Centre
Nottingham, NG7 2UH UK

## 3.0 CONTRACTOR AND KEY PERSONNEL

### 3.1 Contractor

The Contractor shall have competence in chemical acquisition, preparation, solubility testing, and distribution and shall provide competent personnel, adequate facilities, equipment, supplies, proper health and safety guidelines, and satisfactory quality assurance procedures.

#### 3.1.1 *Personnel*

##### 3.1.1.1 ***Facility Management***

The facility management is responsible for establishing scientific guidelines and procedures, training and supervision of professional and technical staff, and evaluation of results and performance within their discipline area relative to the Project Officer's stated requirements. The manager must maintain records of the qualifications, training and experience, and a job description for each professional and technical individual involved in test chemical acquisition, preparation, solubility testing, and distribution.

##### 3.1.1.2 ***Study Director***

A scientist or other professional of appropriate education, training, and experience in chemical acquisition, preparation, solubility testing, and distribution, or combination thereof, shall be the Study Director. The Study Director has the overall responsibility for the technical conduct of chemical acquisition, preparation, solubility testing, and distribution for the Validation Study (e.g., GLP adherence) and shall be responsible for determining test acceptance. The Study Director shall be responsible for providing SOPs that incorporate pertinent information obtained from the Statement of Work. Other duties include the interpretation and analysis of test chemical solubility data, documentation of all study aspects (including maintenance of a Study Workbook), and production of all draft and final written reports.

##### 3.1.1.3 ***Quality Assurance (QA) Director***

The Quality Assurance Director shall **monitor** all tasks and assure conformance with GLP requirements (i.e., facilities, equipment, personnel, methods, practices, records, controls, transference of data into software, SOPs). Quality Assurance Director or unit can be any person or organizational element, except the Study Director, designated by Contractor management to perform the duties relating to quality assurance of the studies and tasks. The Quality Assurance duties are not a substitute for the Study Director duties.

**3.1.1.4** ***Scientific Advisor(s)***
Scientists or other professionals of appropriate education, training, and experience in chemical acquisition, preparation, solubility testing, and distribution who provide scientific guidance to the Study Director and other laboratory personnel.

**3.1.1.5** ***Laboratory Technician(s)***
Each individual engaged in the conduct of or responsible for the supervision of a study shall have education, training, and experience, or combination thereof, to enable that individual to perform the assigned duties. The individuals must be trained in GLP requirements and technical ability must be documented as per GLP requirements.

**3.1.1.6** ***Safety Officer***
The Contractor shall designate a Safety Officer who will provide a sealed health and safety information package that will accompany the test chemicals to the Test Facilities. A duplicate package will be provided to the Project Officer and Management Team.

**3.1.2** ***Facilities, Equipment, and Supplies***

**3.1.2.1** ***Laboratory***
The Contractor must provide a designated laboratory/area to ensure that test chemical preparation and solubility testing can be performed under clean conditions. Potential for cross-contamination of chemicals should be minimal.

**3.1.2.2** ***Equipment***
The Contractor must provide at a minimum the following equipment:
a) Water bath (37$^{o}$C)
b) Sonication unit
c) Vortex unit
d) Pippettors (micropipettors,)
e) Computer (for data transformation and analysis)
f) Balance
g) pH meter

All equipment maintenance and calibration shall be routinely performed and documented as per GLP guidelines and Contractor procedures

**3.1.2.3** ***Supplies***
All cell culture reagents must be labeled so as to indicate source, identity, concentration, stability, preparation and expiration dates, and storage conditions.
a) Dulbecco's Modification of Eagle's Medium (DMEM) without L-Glutamine; should have Hanks' salts and high glucose [4.5gm/l] (e.g., ICN-Flow Cat. No. 12-332-54)
b) L-Glutamine 200 mM (e.g., ICN-Flow # 16-801-49)
c) New Born Calf Serum (NBCS) (e.g., Biochrom # SO 125)
d) Dimethyl sulfoxide (DMSO), U.S.P. analytical grade. DMSO shall be stored under nitrogen at –20$^{o}$C.
e) Ethanol (ETOH), U.S.P. analytical grade (100%, non-denatured)

f) Keratinocyte Basal Medium without $Ca^{++}$ (KBM®, Clonetics CC-3104) that is completed by adding the *KBM® SingleQuots®* ~~Bullet Kit®~~[2] (Clonetics CC-4131) to achieve the proper concentrations of epidermal growth factor, insulin, hydrocortisone, antimicrobial agents, bovine pituitary extract, and calcium (e.g., Clonetics Calcium SingleQuots®, CC-4202)*.

g) Penicillin/streptomycin solution (e.g. ICN-Flow # 16-700-49)

* BioWhittaker, 8830 Biggs Ford Road, Walkersville, MD 21793 (http://www.cambrex.com/subsidiaries/s%2Dbw%5Finc/s%2Dbiowhittaker%2Dinc%2Dcontact2.htm)

#### 3.1.3 *Health and Safety*

The Contractor shall conform to all local, state, and federal statutes in effect at the time of this study.

#### 3.1.4 *Quality Assurance*

The Contractor shall conduct the acquisition, preparation, solubility testing, and distribution of test chemicals in compliance with Good Laboratory Practice (GLP) Standards (U.S. Food and Drug Administration, Title 21 CFR Part 58; Environmental Protection Agency, Title 40 CFR Part 160). The appropriate QA unit (as per GLPs) shall audit the procedures and final report.

The Final Report shall be audited by the Quality Assurance unit of the Contractor for GLP compliance and a QA Statement shall be provided by the Contractor. The Final Report shall identify: 1) the phases and data inspected, 2) dates of inspection, and 3) dates findings were reported to the Study Director and Contractor management. The QA Statement shall identify whether the methods and results described in the Final Report accurately reflect the raw data produced during the study.

## 4.0 TEST PHASES AND SCHEDULE

### 4.1 Study Timeline

The following timeline is for the **laboratory testing aspect** of the *In Vitro* Validation Study. The Contractor shall provide the required chemicals in a timely fashion so that each phase of the study can start on the appointed date.

[2] Revised 6/21/02

| TASK | WEEK | ESTIMATED DATE |
|---|---|---|
| Statement of Work issued by NIEHS to the Testing Facility | 0 | March 29, 2002 |
| Response /Proposal received from the Testing Facility | 6 | May 10, 2002 |
| ~~Award of Contracts~~[2] | ~~9~~[2] | ~~May 29, 2002~~[2] |
| Submission of *Study Protocol, CVs of Key Personnel,* SOPs[2] | 11 | June 12, 2002 |
| *Award of Contracts*[2] | *13*[2] | *June 28, 2002*[2] |
| Start Testing – Phase I (Phase Ia) | ~~14~~*18*[2] | July ~~1~~*29*[2], 2002 |
| End Phase Ia | ~~18~~*22*[2] | ~~July~~ *August* 26~~9~~[2], 2002 |
| Begin Phase Ib | ~~22~~*26*[2] | ~~August~~ *September* ~~29~~*26*[2], 2002 |
| End Phase Ib | ~~27~~*31*[2] | October ~~1~~*29*[2], 2002 |
| Begin Phase II | ~~31~~*36*[2] | ~~October~~ *December* 2~~9~~[2], 2002 |
| End Phase II | ~~42~~*46*[2] | ~~January~~ *February* ~~13~~*10*[2], 2003 |
| Begin Phase III | ~~48~~*52*[2] | ~~February~~ *March*[2] 26, 2003 |
| Final Report (Phase III) to SMT | ~~85~~*89*[2] | ~~November~~ *December* ~~11~~*9*[2], 2003 |

### 4.2 Deliverables

The following schedule of deliverables is for **the acquisition, preparation, solubility testing and distribution of test chemicals**.

| | **ESTIMATED DUE DATES (to Project Officer)** | | | |
|---|---|---|---|---|
| Submission of SOPs for **Section 1.1** activities | **Week 11** | | **June 12, 2002** | |
| **REPORTS** | **PHASE Ia** | **PHASE Ib** | **PHASE II** | **PHASE III** |
| Biweekly Reports | a | a | a | a |
| Draft Phase Reports | Week ~~13~~*17* ~~June~~ *July* 24~~6~~[2], 2002 [b] | | Week ~~29~~*33* ~~Oct~~*Nov.* ~~16~~*13*[2], 2002 [b] | Week ~~44~~*48* ~~Jan~~*Feb.* ~~29~~*26*[2], 2003 [b] |
| Draft Final Report (all phases combined) | Week ~~48~~*52* *March*~~Feb.~~[2] 26, 2003 [c] | | | |
| Final Report (all phases combined) | Week ~~50~~*54* ~~March~~ *April* 9~~12~~[2], 2003 [d] | | | |

a Biweekly reports shall begin at the time of implementation of the contracts and continue until the final report is submitted.

b Draft Phase Reports shall be submitted to the Project Officer no later than the dates provided (at least two weeks before shipment of chemicals to the Test Facilities).

c Draft Final Report shall be submitted to the Project Officer no later than the date provided (at the most one month after final shipment of chemicals to the Test Facilities).

d Final Report shall be submitted to the Project Officer no later than the date provided (at the most one month after the Project Officer receives the Draft Final Report.

[2] Revised 6/21/02

The following schedule is for the **distribution of test chemicals** to the Testing Facilities.

| | **ESTIMATED DUE DATES (to Testing Facilities)** | | | |
|---|---|---|---|---|
| **CHEMICAL SHIPPING TO TESTING FACILITIES**[a] | **PHASE Ia** | **PHASE Ib** | **PHASE II** | **PHASE III** |
| Positive Control (SLS) | Before July ~~1~~*29*[2], 2002 | --- | --- | --- |
| Phase Ib (3 chemicals) | --- | Before ~~August~~ *September* ~~29~~*26*[2], 2002 | --- | --- |
| Phase II (9 chemicals) | --- | --- | Before ~~October~~ *December* 2~~9~~[2], 2002 | --- |
| Phase III (60 chemicals) | --- | --- | --- | Before ~~February~~ *March*[2] 26, 2003 |

*a* Dates for chemical shipments are to ensure that the Testing Facilities receive Test Chemicals prior to the start dates of each lab testing phase. Phase III chemicals shall be shipped as one group of 60 chemicals. Chemicals for each phase are identified in Addendum IV.

### 4.3 *In Vitro* Validation Study Phases

***Phase I:*** The training phase for laboratory personnel. This phase includes developing a positive control database (Phase Ia) and testing three unknown chemicals (Phase Ib).
***Phase II:*** The qualification phase. This phase requires testing nine blinded/coded chemicals in the same *in vitro* cytotoxicity assays and in the same concentration-response fashion as in Phase Ib.
***Phase III:*** Testing 60 blinded/coded chemicals in the same manner as in Phases I and II.

### 4.4 Report Submission Timelines

#### 4.4.1 *Draft Reports*

Draft reports for each phase shall be submitted to the Project Officer as per **Section 4.2**.

#### 4.4.2 *Final Report*

The Final report shall be submitted to the Project Officer as per **Section 4.2**.

## 5.0 ACQUISITION, PREPARATION, AND DISTRIBUTION OF TEST CHEMICALS

### 5.1 Test Chemicals

#### 5.1.1 *Range of Toxicities*

The chemicals proposed for the Validation Study are representative of a range of toxicities and are relevant with regard to human exposure potential. The test chemicals

[2] Revised 6/21/02

will represent each of the Globally Harmonized System (GHS) classification groups for rat oral LD50s: ≤ 5 mg/kg, >5 ≤ 50 mg/kg, >50 ≤ 300 mg/kg, >300 ≤ 2000 mg/kg, >2000 ≤ 5000 mg/kg, and >5000 mg/kg (OECD, 2001). Addenda III and IV provide the list of test chemicals for the *In Vitro* Validation Study.

**5.1.2** ***Procurement of Test Chemicals***

The Contractor shall purchase 73 chemicals specified in Addenda III and IV (72 "test chemicals" and one "positive control") from commercial manufacturers. Chemical purity shall be 99% or greater when economically feasible. Chemical information from the manufacturers shall be collected as specified in **Section 7.1.2** and reported as indicated in Addendum I. Chemicals shall be stored as recommended by the manufacturer.

**5.1.3** ***Dispensing Chemicals***

While preparing the purchased chemicals for distribution to the Testing Facilities, only one bulk substance shall be dispensed at any time. All test samples shall be sealed and labeled before dispensing the next substance. Once test samples have been dispensed into aliquots, they shall be returned to appropriate storage conditions until they are dispatched.

During dispensing, all test chemicals, with the exception of the positive control, will be randomly blinded/coded so that testing by the Testing Facilities will be conducted on chemicals with a masked identity. Each chemical shall have a code that is unique for each Testing Facility (i.e., no chemical shall have the same code in any Testing Facility). The Contractor shall dispense 4 g of test chemical/Testing Facility (see Addendum V for assumptions used to determine the amount of chemical/Testing Facility) into clean, sterile containers, and assign unique code identifiers, and archive two additional samples. About 100 g of the positive control shall be distributed to each lab and one additional sample shall be archived.

**5.1.4** ***Shipment of Chemicals***

After dispensing and labeling chemical aliquots with unique codes, the Contractor shall ship a set of the test chemicals, including the positive control, to the each of three Testing Facilities. Two Facilities will be in the US and one will be in the United Kingdom. The Contractor will package test chemicals so as to minimize damage during transit and will ship them to each Testing Facility according to proper regulatory procedures. Except for the positive control in Phase Ia, chemicals are to be packaged and shipped so as to conceal their identities. Test chemicals shall be shipped under conditions that will preserve the integrity of the chemicals. The Contractor shall notify the Testing Facilities (and the Project Officer) when the test chemicals are shipped so as to prepare for receipt.

The Contractor will retain the archived chemicals, which may be required for retesting or purity analysis, until the completion of the Validation Study.

**5.1.4.1** ***<u>Distribution Phases</u>***

***Phase Ia***: For Phase I, the positive control chemical identified in Addendum III shall be distributed to all three Testing Facilities.
***Phase Ia***: For Phase Ib, the three (3) blinded/coded chemicals identified in Addendum III shall be distributed to all three Testing Facilities.
***Phase II***: Nine (9) blinded/coded chemicals identified in Addendum III shall be distributed to all three Testing Facilities.

***Phase III:*** Sixty (60) blinded/coded chemicals identified in Addendum III shall be distributed to the Test Facilities. Chemicals will be shipped –as a group of 60 chemicals.

**5.1.5** ***Receipt of Chemicals by the Testing Facilities***
With the exception of the positive control shipment, which shall be shipped directly to the Study Director, the chemical shipments shall be addressed to the Testing Facility Safety Officers and accompanied by a sealed information packet containing the appropriate health and safety procedures for use (i.e., Material Safety Data Sheets (MSDS) or equivalent documentation with proper protection, procedures for accidental ingestion or contact with skin or eyes, and procedures for containing and recovering spills) and a disclosure key for identifying test chemicals by code. The shipment shall include instructions for the Testing Facility Safety Officer to:

1) Immediately notify the Contractor and Study Project Coordinator upon receipt of chemicals,
2) Retain the health and safety package and pass the test chemicals to the Study Director without revealing the identities of the test chemicals,
3) Notify the Management Team if Test Facility personnel open the health and safety packet at any time during the Validation Study, and
4) Return the unopened health and safety package to the Contractor after testing is complete. The Contractor shall immediately notify the Project Officer regarding chemical receipt.

If regulatory transportation requirements dictate that each package must display a list of the chemicals it contains on the outside of the package, the Contractor shall direct the Testing Facility Safety Officer to remove it prior to passing the chemicals to the Study Director.

**5.1.6** ***Test Chemical Information for the Study Director***
The Contractor shall supply, with each test chemical, data sheets giving a minimum of essential information, including color, odor, physical state, weight or volume of sample, specific density for liquid test chemicals, and storage instructions. The Study Director shall receive this information from the Safety Officer.

**5.2 Handling of Test Chemicals**
Appropriate routine safety procedures shall be followed in handling the test chemicals. The Contractor shall include instructions to the Test Facilities to treat all blinded/coded test chemicals as ***very hazardous and potentially carcinogenic.*** After the studies are completed, the remaining test chemicals will be returned by the Testing Facilities to the Contractor.

**5.3 Determination of Purity, Composition, and Stability of Test Chemicals**
As indicated in **Section 7.1.2**, the Contractor will be directly responsible for collecting information (from manufacturer and supplier documentation) on the analytical purity, composition, and stability of the test chemicals and the positive control material, and their homogeneity (via Contractor solubility studies) in the vehicle.

## 6.0 SOLUBILITY DETERMINATION OF TEST CHEMICALS

The Contractor shall determine solubility of the test chemicals in the same manner as recommended to the Testing Facilities (i.e., by following the hierarchy below).

## 6.1 Cell Culture Media and Control Material

### 6.1.1 *Test Chemical Medium Solvents*

#### 6.1.1.1 ***~~Treatment~~ Chemical Dilution[3] Medium (BALB/c 3T3 NRU)***

*Serum-free*[3] Dulbecco's Modification of Eagle's Medium (DMEM) [see **Section 3.1.2.3.a**] buffered with sodium bicarbonate and supplemented with (final concentrations in DMEM are quoted):

| | |
|---|---|
| ~~5%~~ | ~~NBCS~~[3] |
| 4 mM | Glutamine |
| ~~100~~ *200* IU/*mL*[3] | Penicillin |
| ~~100~~ *200* µg/ml[3] | Streptomycin |

This *serum-free*[3] medium is used in the assay for ~~application of~~*dissolving*[3] test chemicals *prior to application*[3] to the 3T3 cells.

#### 6.1.1.2 ***Routine Culture Medium (NHK NRU)***

*KBM® (Clonetics CC-3104) supplemented with KBM® SingleQuots® (Clonetics CC-4131) and Clonetics Calcium SingleQuots® (CC-4202) to make 500ml of medium. Final concentration of supplements in medium are:*~~A modified MCDB 153 formulation such as Clonetics® Keratinocyte Basal Medium (KBM®) supplemented with (final concentrations in KBM® are quoted):~~[2]

| | |
|---|---|
| 0.*000*1 ng/ml[2] | Human recombinant epidermal growth factor |
| 5 *µ*g/ml[2] | Insulin |
| 0.5 g/ml[2] | Hydrocortisone |
| ~~50~~ *30 µ*g/ml[2] | Gentamicin |
| ~~50~~ *15* ng/ml[2] | Amphotericin B |
| 0.10 mM | Calcium |
| ~~2 ml 7.5 mg/ml~~*30 µg/ml*[2] | Bovine pituitary extract. |

This medium is used in the assay as the routine culture medium and for application of test chemicals to the NHK cells. *Complete media should be kept at 4°C and stored for no longer than two weeks.*[2]

*NOTE: KBM® SingleQuots® contain the following stock concentrations and volumes:*[2]

| | | |
|---|---|---|
| *0.1 ng/ml* | *hEGF* | *0.5 ml*[2] |
| *5.0 mg/ml* | *Insulin* | *0.5 ml*[2] |
| *0.5 mg/ml* | *Hydrocortisone* | *0.5 ml*[2] |
| *30 mg/ml* | *Gentamicin, 15 ug/ml Amphotericin-B* | *0.5 ml*[2] |
| *7.5 mg/ml* | *Bovine Pituitary Extract (BPE)* | *2.0 ml*[2] |

*Clonetics Calcium SingleQuots® are 2 ml of 300mM concentration of calcium.*[2] *165 ul of solution per 500 ml calcium-free medium equals 0.10 mM calcium in the medium.*[2]

[3] Revised 9/17/02
[2] Revised 6/21/02

**6.1.2 *Positive Control (PC)***
Sodium Lauryl Sulfate ([SLS], CAS # 151-21-3) will be the positive control material for the *In Vitro* Validation Study.

## 6.2 Preparation of Test Chemical

All chemicals (including the positive control [SLS]) shall be weighed on a calibrated balance (including liquid test chemicals) and added to the appropriate solvent (**Section 6.2.1**). Test chemicals must be at room temperature before dissolving. Preparation under red light or yellow light may be necessary, if rapid photodegradation is likely to occur. The solutions must not be cloudy nor have noticeable precipitate.

**6.2.1 *Dissolving the Test Chemical*[3]**
The hierarchy specified in **Sections 6.2.1.1 to 6.2.1.3** (i.e., culture medium, DMSO, ethanol) shall be followed for dissolving the test chemicals and positive control. Both assay-specific culture media specified in **Section 6.1.1** *(i.e., Chemical Dilution Medium for 3T3 cells and Routine Culture Medium for NHK cells)* must be tested.

*Approximately 100 mg (100,000 µg) of the test chemical will be weighed into a glass tube and the weight will be documented. Assay-specific media will be added to the vessel so that the concentration is 200,000 µg/ml (200 mg/mL) (i.e., approximately 0.5 mL). The solution is mixed as specified in Section 6.2.1.1. If complete solubility is achieved, then additional solubility procedures are not needed. If only partial solubility is achieved, follow the test chemical dissolving steps in Table 1, derived from EPA (1998), to add additional medium in steps until the concentration is a minimum of 2,000 µg/mL (2 mg/mL). If complete solubility at 2,000 µg/mL in medium can't be attained, then repeat the solubility steps using the other solvent(s) in the solubility hierarchy. Test chemicals that are only soluble in DMSO or ethanol will be prepared at 500,000 µg/mL as the highest concentration of stock solution.*

***Table 1: Determination of Solubility in Media***

| ***STEP*** | ***1*** | ***2*** | ***3*** | ***4*** | ***5*** |
|---|---|---|---|---|---|
| *Total Volume of Medium* | *0.5 mL* | *2.5 mL* | *5.0 mL* | *2.0 mL* | *10.0 mL* |
| *Concentration of Test Chemical (Add 100 mg to a tube. Add the first volume of medium. Dilute with subsequent volumes if necessary.)* | *200,000 µg/mL (200 mg/mL)* | *40,000 µg/mL (40 mg/mL)* | *20,000 µg/mL (20 mg/mL)* | | |
| *Concentration of Test Chemical (Add 20 mg to a large tube. Add the first volume of medium. Dilute with subsequent volume if necessary.)* | | | | *10,000 µg/mL (10 mg/mL)* | *2,000 µg/mL (2.0 mg/mL)* |
| *If test chemical is insoluble in medium at 2000 µg/mL, then attempt to dissolve chemical in DMSO. Actual volume of solution can be determined after test chemical is dissolved and solution is measured using a calibrated instrument (e.g., micropipettor, or serological pipette). The actual stock concentration can be calculated accordingly.* | | | | | |

*Example: If complete solubility is not achieved in 0.5 mL medium (Step 1) using the mixing procedures specified in **Section 6.2.1.1, b-d,** then 2.0 mL must be added to obtain a total volume of 2.5 mL (Step 2). Chemical and medium are again mixed as prescribed in **Section 6.2.1.1** in an attempt to dissolve. If solubility is not achieved at Step 2, then 2.5 mL medium is added in Step 3.*

[3] Section 6.2.1 replaced 9/17/02

*Chemical and medium are again mixed as prescribed in Section **6.2.1.1** in an attempt to dissolve. No additional weighing of the chemical is required until Step 4.*

***6.2.1.1 Chemical Dilution Medium/Routine Culture Medium***

a) *Dissolve test chemical in Chemical Dilution Medium and Routine Culture Medium as in Step 1 of **Table 1**.*
b) *Gently mix. Vortex for 1-2 minutes.*
c) *If test chemical hasn't dissolved, use sonication for up to five minutes.*
d) *If sonication doesn't work, then warm solution to 37°C.*
e) *Proceed to Step 2 (and Steps 3-5, if necessary) of **Table 1** and repeat procedures b-d.*

***6.2.1.2 DMSO***

*If the test chemical doesn't dissolve in the Chemical Dilution Medium or Routine Culture Medium, then follow the dilution steps in **Table 1A** and mixing steps a) through e) in **Section 6.2.1.1** using DMSO instead of Chemical Dilution Medium/Routine Culture Medium.*

***6.2.1.3 Ethanol***

*If the test chemical doesn't dissolve in DMSO, then follow the dilution steps in **Table 1A** and mixing steps a) through e) in **Section 6.2.1.1** using ethanol instead of DMSO.*

***Table 1A: Determination of Solubility in DMSO and Ethanol***

| Steps | 1 | 2 | 3 | 4 | 5 | 6 |
|---|---|---|---|---|---|---|
| Total Volume of DMSO or Ethanol | 0.2 mL | 0.5 mL | 2.5 mL | 5.0 mL | 2.0 mL | 10.0 mL |
| Concentration of Test Chemical (Add 100 mg to a tube. Add the first volume of solvent. Dilute with subsequent volumes if necessary.) | 500,000 µg/mL (500 mg/mL) | 200,000 µg/mL (200 mg/mL) | 40,000 µg/mL (40 mg/mL) | 20,000 µg/mL (20 mg/mL) | | |
| Concentration of Test Chemical (Add 20 mg to a tube. Add the first volume of solvent. . Dilute with subsequent volume if necessary.) | | | | | 10,000 µg/mL (10 mg/mL) | 2,000 µg/mL (2.0 mg/mL) |
| If test chemical is insoluble in DMSO at 2000 µg/mL, then attempt to dissolve chemical in ethanol. Actual volume of solution can be determined after test chemical is dissolved and solution is measured using a calibrated instrument (e.g., micropipettor, or serological pipette). The actual stock concentration can be calculated accordingly. | | | | | | |

*If the test chemical does not dissolve in Chemical Dilution Medium/Routine Culture Medium, DMSO, or ethanol, at 2 mg/mL, then repeat the entire solubility procedure with each solvent (in the order of Chemical Dilution Medium/Routine Culture Medium, DMSO, and ethanol) using the dilution steps in **Table 1B** and mixing steps a) through e) in **Section 6.2.1.1**.*[4]

[4] Added 10/11/02

***Table 1B: Further Determination of Solubility in Chemical Dilution Medium/Routine Culture Medium, DMSO, or Ethanol***[4]

| *STEP* | *6* | *7* | *8* | *9* | *10* |
|---|---|---|---|---|---|
| *Total Volume of Solvent* | *5 mL* | *10 mL* | *20 mL* | *40 mL* | *100 mL* |
| *Concentration of Test Chemical (Add 5 mg to a tube. Add the first volume of solvent. Dilute with subsequent volumes if necessary.)* | *1,000 µg/mL (1 mg/mL)* | *500 µg/mL (0.5 mg/mL)* | *250 µg/mL (0.25 mg/mL)* | *125 µg/mL (0.125 mg/mL)* | *50 µg/mL (0.05 mg/mL)* |
| *If test chemical is insoluble in medium at 50 µg/mL, then attempt to dissolve chemical in DMSO and then ethanol. Actual volume of solution can be determined after test chemical is dissolved and solution is measured using a calibrated instrument. The concentration can be calculated accordingly.* | | | | | |

~~Approximately 100 *200* mg (100*200*,000 µg)[2] of the test chemical will be weighed into a glass tube and the weight will be documented. Assay-specific culture media will be added to the vessel so that the concentration is 1*2*,000,000 µg/ml (1000 *2000* mg/ml)[2] (i.e., approximately 0.1 ml). If complete solubility is achieved, then additional solubility procedures are not needed. If only partial solubility is achieved, follow the test chemical dissolving steps in Table 1, derived from EPA (1998), to add additional medium in steps until the concentration is a minimum of 100*200*,000 µg/ml (100 *200* mg/ml)[2]. If complete solubility at 100,000 µg/ml in culture medium can't be attained, then repeat the solubility steps using the other solvent(s) in the solubility hierarchy. Test chemicals that are only soluble in DMSO or ethanol will be prepared at 1*2*,000,000 µg/ml[2] as the highest concentration of stock solution.~~

~~***Table 1: Determination of Solubility***~~

| ~~**Solubility Data**~~ | ~~**Step 1**~~ | ~~**Step 2**~~ | ~~**Step 3**~~ |
|---|---|---|---|
| ~~Total volume of medium added (ml)~~ | ~~0.1~~ | ~~0.5~~ | ~~1.0~~ |
| ~~Total volume of DMSO or ethanol added (ml)~~ | ~~0.1~~ | ~~***0.5~~[2] | ~~***1.0~~[2] |
| ~~Approximate solubility (µg/ml)~~ | ~~≥ 1*2*,000,000~~[2] | ~~200*400*,000~~[2] | ~~100*200*,000~~[2] |

~~**6.2.1.1 *Treatment Medium/Routine Culture Medium)***~~

~~*a)f)* Dissolve test chemical in Treatment Medium and Routine Culture Medium~~
~~*b)g)* Gently mix. Vortex for 5-10 seconds*1-2 minutes*.[2]~~
~~*c)h)* If test chemical hasn't dissolved, use sonication (up to five minutes).~~
~~*d)i)* If sonication doesn't work, then warm solution to 37°C.~~

~~**6.2.1.2 *DMSO***~~

~~If the test chemical doesn't dissolve in the Treatment Medium/Routine Culture Medium, then follow steps a) through d) in **Section 6.2.1.1** using DMSO instead of Treatment Medium/Routine Culture Medium.~~

**6.2.1.3 *Ethanol***

~~If the test chemical doesn't dissolve in DMSO, then follow steps a) through d) in **Section 6.2.1.1** using ethanol instead of DMSO.~~

[2] Revised 6/21/02
[2] Revised 6/21/02

#### 6.2.2 *pH of Solutions*

Measure the pH (using pH paper) of the highest concentration of test chemical dissolved in the culture media. Document the pH and note the color of each test chemical concentration in medium.

## 7.0 DATA COLLECTION

### 7.1 Nature of Data to be Collected

#### 7.1.1 *Solubility Studies*

The Contractor shall record all information pertinent to the solubility of the test chemical:

a) *Approximate t*~~T~~[3]est chemical solubility in *all solvents tested (i.e., media, DMSO, and/or ethanol) in weight per unit volume (i.e. mg/mL) estimated by following the step-wise solubility protocol* ~~culture medium at a minimum of 100*200*,000[2] µg/ml~~[3]
b) pH of test chemical in culture medium; color of culture medium
~~c) Test chemical solubility in DMSO or ethanol at 1*2*,000,000[2] µg/ml~~[3]
d) Need of vortexing, sonication, and/or heating

The Contractor shall provide this information to the Study Management Team via the Project Officer by the avenues described in Section 8. **This information shall NOT be provided to the Testing Facilities.** Information to be provided to the Testing Facilities is specified in Sections 5.1.5 and 5.1.6.

#### 7.1.2 *Chemical Information*

The Contractor shall supply at a minimum the following information about each test chemical and report as specified in Addendum I.

a) Purity
b) CAS #
c) Supplier
d) Specification sheets
e) Certificates of analysis
f) Material Safety Data Sheet (MSDS)
g) Color
h) Odor
i) Physical state
j) Weight or volume of sample distributed to the Testing Facility
k) Specific density for liquid test chemicals
l) Storage instructions
m) Chemical hazards
n) Special handling instructions
o) Amount of material archived

[Note: Much of the information will be in the MSDS.]

### 7.2 Type of Media Used for Data Storage

Originals of the raw data (the Study Workbook) and copies of other raw data such as instrument logs shall be collected and archived at the end of the study (under the direction of the Study Director), according to GLP-compliant procedures. Data that are stored electronically shall be periodically copied, and backup files shall be produced and maintained.

[2] Revised 6/21/02
[3] Revised 9/17/02

### 7.3 Documentation

Original raw data that shall be collected shall include but are not limited to the following:

- Data recorded in the Study Workbook, which shall consist of all recordings of all activities related to acquisition, preparation, solubility testing, and distribution of the test chemicals;
- Other data collected as part of GLP compliance
  - Equipment logs
  - Equipment calibration records

## 8.0 DRAFT AND FINAL REPORTS

***Biweekly Reports***: The Contractor will provide a biweekly progress report to the Project Officer and copied to the Project Coordinators of the Study Management Team (See **Section 4.2** and Addendum I). These reports will include raw and interim data as the study progresses. These reports will be in electronic format (i.e., email with Microsoft® Word (or equivalent) or Excel attachments).

***Draft Reports***: A draft report shall be submitted to the Project Officer for each Validation Study phase (See **Section 4.2** and Addendum I). A Draft Final Report detailing the Contractor's involvement in all phases of the Validation Study shall be prepared by the Contractor, signed by the Study Director, and provided to the Project Officer. The submitted results shall accurately describe all methods used for generation and analysis of the data, provide a complete record of the preparation of test chemicals, and present any relevant data necessary for the assessment of the results (See Addendum I).

***Final Report***: The Draft Final Report shall be revised according to comments from the Project Officer and submitted as the Final Report (**See Section 4.2** and Addendum I).

## 9.0 RECORDS AND ARCHIVES

At the conclusion of the Contractor's participation in the distribution of chemicals for the Validation Study, the original raw and derived data, as well as copies of other raw data not exclusive to this Validation Study (instrument logs, calibration records, facility logs, etc.), shall be submitted to NIEHS/NICEATM (via the Project Officer) for storing and archiving according to the facility's SOP and in compliance with GLP Standards.

Originals of all raw and derived data, or copies where applicable, shall be stored and archived at NIEHS/NICEATM.

## 10.0 ALTERATIONS OF THE STATEMENT OF WORK

No changes in the Statement of Work shall be made without the consent of the Project Officer and Study Management Team. A Statement of Work Amendment detailing any change(s) and the basis for the change(s) shall be approved and prepared by the Study Director, and the amendment shall be signed and dated by the Study Director and the NIEHS representative. The amendment shall be retained with the original Statement of Work.

## 11.0 REFERENCES

Clonetics Normal Human Keratinocyte Systems Instructions for Use, AA-1000-4-Rev.03/00. (http://www.clonetics.com).

EPA Product Properties Test Guidelines. OPPTS 830.7840. 1998. Water Solubility: Column Elution Method; Shake Flask Method. United States Environmental Protection Agency. Prevention, Pesticides and Toxic Substances (7101). EPA 712-C-98-041. March 1998.

National Toxicological Program, September 2000, Attachment 2 revised. Specifications for the Conduct of Studies to Evaluate the Toxic and Carcinogenic Potential of Chemical, Biological and Physical Agents in Laboratory Animals for the National Toxicology Program (NTP).

NICEATM (The National Toxicology Program [NTP] Interagency Center for the Evaluation of Alternative Toxicological Methods). 2001. Test Method Protocol for the BALB/c 3T3 Neutral Red Uptake Cytotoxicity Test. A Test for Basal Cytotoxicity for an *In Vitro* Validation Study.

NICEATM (The National Toxicology Program [NTP] Interagency Center for the Evaluation of Alternative Toxicological Methods). 2001. Test Method Protocol for the Normal Human Keratinocyte [NHK] Neutral Red Uptake Cytotoxicity Test. A Test for Basal Cytotoxicity for an *In Vitro* Validation Study.

ICCVAM (Interagency Coordinating Committee on the Validation of Alternative Methods). 2001. Guidance document on using *in vitro* data to estimate *in vivo* starting doses for acute toxicity NIH publication 01-4500. NIEHS, Research Triangle Park, North Carolina.

OECD (Organisation for Economic Co-operation and Development). 2001. Harmonised Integrated Classification System for Human Health and Environmental Hazards of Chemical Substances and Mixtures as Endorsed by the 28th Joint Meeting of the Chemicals Committee and the Working Party on Chemicals in November 1998, Part 2, p. 21. OECD, Paris. http://www.oecd.org/ehs/class/HCL6htm.

## 12.0 APPROVAL OF STATEMENT OF WORK

| | |
|---|---|
| **Sponsor Representative** | **Date** |
| **Testing Facility Management** | **Date** |

# ADDENDUM I

## SUGGESTED REPORT FORMAT

## TITLE PAGE

- **Study Title**
  Draft Report 1: *Acquisition, Preparation, Solubility Testing, and Distribution of Test Chemicals: Phase I of the In Vitro Validation Study*
  Draft Report 2: *Acquisition, Preparation, Solubility Testing, and Distribution of Test Chemicals: Phase II of the In Vitro Validation Study*
  Draft Report 3: *Acquisition, Preparation, Solubility Testing, and Distribution of Test Chemicals: Phase III of the In Vitro Validation Study*
  Draft/Final Report: *Acquisition, Preparation, Solubility Testing, and Distribution of Test Chemicals: Final Report for the In Vitro Validation Study*

- **Test Articles**
  Draft Report 1: Identify the positive control chemical of Phase Ia and the three (3) test chemicals of Phase Ib
  Draft Report 2: Identify the nine (9) test chemicals of Phase II
  Draft Report 3: Identify the sixty (60) test chemicals of Phase III
  Draft/Final Report: Identify all seventy-two (72) test chemicals and positive control of the *In Vitro* Validation Studies
- **Authors**
- **Study Completion Date**
- **Contract Facility**
- **Study Number/Identification**

## SIGNATURE PAGE

- **Study Initiation Date:** Date Statement of Work was signed
- **Initiation Date of Laboratory Studies:** Actual laboratory start date
- **Study Completion Date:** Date report signed by Study Director
- **Sponsor Representative:**
  Ms. Molly Vallant – Project Officer
  The National Institute of Environmental Health Sciences (NIEHS)
- **Study Management Team Representatives**
  Judy Strickland, Ph.D. (Project Coordinator)
  Michael Paris (Assistant Project Coordinator)
- **Contractor Facility:** Name and address
- **Archive Location:** Name and address
- **Study Director:** Name and signature and date
- **Key Personnel:** Laboratory technicians, QA Director, Safety Officer
- **Facility Management:** Name
- **Scientific Advisor:** Name

## ADDENDUM I (cont.)

## DRAFT REPORT 1

*Acquisition, Preparation, Solubility Testing, and Distribution of Test Chemicals: Phase I of the In Vitro Validation Study*

- **Table of Contents**
- **Objectives :**The report shall provide specific objectives
- **Summary of the Findings:** Referenced to the raw data where appropriate; Include all information for the positive control (SLS) and the three (3) Phase Ib chemicals.
- **Narrative Description of the Solubility Studies:** Describe any problems that were encountered and how such problems were solved. Justifications for solvents used for each test chemical will be included in the description. Provide the information requested in **Section 7.1.1**. Deviations from the protocols, SOPs, and/or the Statement of Work shall be addressed in this section. Copies of appropriate sections of the Study Workbook shall be included with the report (as attachments). The draft report will include unaudited Study Workbook pages. The final report will include a copy of the audited Study Workbook with a statement (signed and dated by the Study Director) on the front of it stating that it is an exact copy of the original audited workbook.
- **Statement Signed by the Study Director:** Confirm that the solubility studies, acquisition, preparation, and distribution of the test chemicals were conducted in compliance with GLP (or indicating where the Study deviated from GLP). Confirm that the report fully and accurately reflects the raw data generated in the Study.
- **Other Information:** (All copies of documents will be noted as exact duplicates of the data.)
  - Information requested in **Section 7.1.2**
  - Deviations to the protocols, SOPs, and Statement of Work
  - Revisions/amendments to the protocols, SOPs, and Statement of Work

## DRAFT REPORT 2

*Acquisition, Preparation, Solubility Testing, and Distribution of Test Chemicals: Phase II of the In Vitro Validation Study*

- **Table of Contents**
- **Objectives:** The report shall provide specific objectives
- **Summary of the Findings:** Referenced to the raw data where appropriate; Include all information for the nine (9) Phase II chemicals.
- **Narrative Description of the Solubility Studies:** Describe any problems that were encountered and how such problems were solved. Justifications for solvents used for each test chemical shall be included in the description. Provide the information requested in **Section 7.1.1**. Deviations from the protocols, SOPs, and/or the Statement of Work shall be addressed in this section. Copies of appropriate sections of the Study Workbook shall be included with the report (as attachments). The draft report will include unaudited Study Workbook pages. The final report will include a copy of the audited Study Workbook with a statement (signed and dated by the Study Director) on the front of it stating that it is an exact copy of the original audited workbook.
- **Statement Signed by the Study Director**: Confirm that the solubility studies, acquisition, preparation, and distribution of the test chemicals were conducted in compliance with GLP (or indicating where the Study deviated from GLP). Confirm that the report fully and accurately reflects the raw data generated in the Study.
- **Other Information:** (All copies of printouts, documents, and spreadsheets shall be noted as exact duplicates of the data.)
  - Information requested in **Section 7.1.2**
  - Deviations to the protocols, SOPs, and Statement of Work
  - Revisions/amendments to the protocols, SOPs, and Statement of Work

## ADDENDUM I (cont.)

## DRAFT REPORT 3

*Acquisition, Preparation, Solubility Testing, and Distribution of Test Chemicals: Phase III of the In Vitro Validation Study*

- **Table of Contents**
- **Objectives:** The report shall provide specific objectives
- **Summary of the Findings:** Referenced to the raw data where appropriate; Include all information for sixty (60) Phase III chemicals.
- **Narrative Description of the Solubility Studies:** Describe any problems that were encountered and how such problems were solved. Justifications for solvents used for each test chemical will be included in the description. Provide the information requested in **Section 7.1.1**. Deviations from the protocols, SOPs, and/or the Statement of Work shall be addressed in this section. Copies of appropriate sections of the Study Workbook shall be included with the report (as attachments). The draft report will include unaudited Study Workbook pages. The final report will include a copy of the audited Study Workbook with a statement (signed and dated by the Study Director) on the front of it stating that it is an exact copy of the original audited workbook.
- **Statement Signed by the Study Director:** Confirm that the solubility studies, acquisition, preparation, and distribution of the test chemicals were conducted in compliance with GLP (or indicating where the Study deviated from GLP). Confirm that the report fully and accurately reflects the raw data generated in the Study.
- **Other Information:** (All copies of printouts, documents, and spreadsheets shall be noted as exact duplicates of the data.)
  - Information requested in **Section 7.1.2**
  - Deviations to the protocols, SOPs, and Statement of Work
  - Revisions/amendments to the protocols, SOPs, and Statement of Work

## DRAFT/FINAL REPORT

*Acquisition, Preparation, Solubility Testing, and Distribution of Test Chemicals: Draft/Final Report for the In Vitro Validation Study*

- **Table of Contents**
- **Objectives:** The draft/final report shall provide specific objectives
- **Summary of the Findings:** Referenced to the raw data where appropriate; Include all information for the seventy-two (72) test chemicals and the positive control (SLS).
- **Narrative Description of the Solubility Studies:** Describe any problems that were encountered and how such problems were solved. Justifications for solvents used for each test chemical shall be included in the description. Provide the information requested in **Section 10.1.1**. Deviations from the protocols, SOPs, and/or the Statement of Work shall be addressed in this section. Copies of appropriate sections of the Study Workbook shall be included with the report (as attachments). The draft report will include unaudited Study Workbook pages. The final report will include a copy of the audited Study Workbook with a statement (signed and dated by the Study Director) on the front of it stating that it is an exact copy of the original audited workbook.
- **Statement Signed by the Study Director:** Confirm that the acquisition, preparation, solubility studies, and distribution of the test chemicals were conducted in compliance with GLP (or indicating where the Study deviated from GLP). Confirm that the report fully and accurately reflects the raw data generated in the Study.
- **Quality Assurance Statement: (For Final Report only)**
  QA Statement identifying: 1) the phases and data inspected, 2) dates of inspection, and 3) dates findings were reported to the Study Director and Testing Facility management. The QA

Statement shall identify whether the methods and results described in the Final Report accurately reflect the raw data produced during the Study.

- **Other Information:** (All copies of printouts, documents, and spreadsheets shall be noted as exact duplicates of the data.)
  - Deviations to the protocols, SOPs, and Statement of Work
  - A list of all SOPs used by the laboratory (SOP title and laboratory identification code)
  - The Statement of Work

## BIWEEKLY REPORTS

**Contract Facility:**

**Chemicals Acquired:**

**Chemicals Tested for Solubility:**

**Results of Solubility Tests:**

**Chemicals Shipped to Testing Facilities:**

**Date of Shipping:**

**Problems Encountered/Resolutions:**

**Projected Shipping Schedule:**

# ADDENDUM II
## SUGGESTED STANDARD TEST REPORTING TEMPLATE FOR STUDY WORKBOOK

## [1]SOLUBILITY TESTING
### Test Chemicals for the *In Vitro* Validation Study

Study No._____

Test Chemical_____ Test Chemical Code_____ CAS #_____

Physical Description_____ Liquid Density_____

Solubility Determined by_____
Date_____

| Solvent | Amount of Test Chemical | Volume Added | Total Volume | pH and medium color | Vortex (V) Sonication (S) Heating-37°C (H) | Comments |
|---|---|---|---|---|---|---|
| Treatment Medium (3T3 NRU) | | 0.1ml | | | | |
| | | 0.5ml | | | | |
| | | 1.0ml | | | | |
| Routine Culture Medium (NHK NRU) | | 0.1ml | | | | |
| | | 0.5ml | | | | |
| | | 1.0ml | | | | |
| DMSO | | 0.1ml | | | | |
| | | | | | | |
| | | | | | | |
| Ethanol | | 0.1ml | | | | |
| | | | | | | |
| | | | | | | |

Reference Color of Treatment Medium_____

Reference Color of Routine Culture Medium_____

Balance I.D._____
Treatment Medium and Routine Culture Medium: minimum concentration of 100mg/ml.
DMSO and Ethanol: minimum concentration of 1000mg/ml.

[1] Adaptation of Institute of In Vitro Sciences (IIVS) form – 350 [2/2002]

## ADDENDUM III
## TEST CHEMICALS FOR THE *IN VITRO* VALIDATION STUDY (ALPHABETICAL)

***[NOTE: TESTING FACILITIES MUST NOT SEE THIS LIST OF CHEMICALS]***

| CHEMICAL | CAS NO. |
|---|---|
| 1,1,1-Trichloroethane | 71-55-6 |
| 2-Propanol | 67-63-0 |
| 5-Aminosalicylic acid | 89-57-6 |
| Acetaminophen | 103-90-2 |
| Acetonitrile | 75-05-8 |
| Acetylsalicylic acid | 50-78-2 |
| ~~**To be determined**~~[1] | |
| Aminopterin | 54-62-6 |
| Amitriptyline *HCl*[3] | ~~50-48-6~~*549-18-8*[3] |
| Arsenic III trioxide | 1327-53-3 |
| Atropine sulfate *monohydrate*[3] | ~~55-48-1, (*17108-73-5*)~~*73791-47-6*[3] |
| Boric aid | 10043-35-3 |
| Busulphan | 55-98-1 |
| Cadmium II chloride | 10108-64-2 |
| Caffeine | 58-08-2 |
| Carbamazepine | 298-46-4 |
| Carbon tetrachloride | 56-23-5 |
| Chloral hydrate | 302-17-0 |
| Chloramphenicol | 56-75-7 |
| Citric Acid | 77-92-9 |
| Colchicine | 64-86-8 |
| Cupric sulfate * 5 H2O | 7758-99-8 |
| Cycloheximide | 66-81-9 |
| Dibutylphthalate | 84-74-2 |
| Dichlorvos (DDVP) | 62-73-7 |
| Diethyl phthalate | 84-66-2 |
| Digoxin | 20830-75-5 |
| Dimethylformamide | 68-12-2 |
| Diquat | 2764-72-9 |
| Disulfoton | 298-04-4 |
| Endosulfan | 115-29-7 |
| Epinephrine bitartrate | 51-42-3 |
| Ethanol | 64-17-5 |
| Ethylene glycol | 107-21-1 |
| Fenpropathrin | 39515-41-8 |
| Gibberellic acid | 77-06-5 |
| Glutethimide | 77-21-4 |
| Glycerol | 56-81-5 |
| Haloperidol | 52-86-8 |
| Hexachlorophene | 70-30-4 |
| Lactic acid | 50-21-5 |
| Lindane | 58-89-9 |

[1] Revised 5/23/02
[3] Revised 9/17/02

## ADDENDUM III (CONT.)

| CHEMICAL | CAS NO. |
|---|---|
| Lithium I ~~sulfate~~*carbonate*[3] | *554-13-2*~~10377-48-7~~[3] |
| Meprobamate | 57-53-4 |
| Mercury II chloride | 7487-94-7 |
| Methanol | 67-56-1 |
| Nicotine | 54-11-5 |
| Paraquat | 1910-42-5, (*3765-78-4,57593-74-5,65982-50-5,136338-65-3,205105-68-6,247050-57-3*)[3] |
| Parathion | 56-38-2 |
| Phenobarbital | 50-06-6 |
| Phenol | 108-95-2 |
| Phenylthiourea | 103-85-5 |
| *Physostigmine*[1] | *57-47-6*[1] |
| Potassium cyanide | 151-50-8 |
| Potassium I chloride | 7447-40-7 |
| Procainamide *HCl*[3] | ~~51-06-9~~*614-39-1*[3] |
| Propranolol HCl | 318-98-9, (*3506-09-0, 146874-86-4*)[1] |
| Propylparaben | 94-13-3 |
| Sodium arsenite | 7784-46-5 |
| Sodium chloride | 7647-14-5 |
| Sodium dichromate dihydrate | 7789-12-0 |
| Sodium hypochlorite | 8007-59-8, (*7681-52-9*)[3] |
| Sodium I fluoride | 7681-49-4 |
| Sodium oxalate | 62-76-0 |
| Sodium selenate~~*10 H20~~[1] | ~~13413~~*13410*-01-0[1] |
| Strychnine | 57-24-9 |
| Thallium I sulfate | 7446-18-6 |
| Trichloroacetic acid | 76-03-9 |
| Triethylene melamine | 51-18-3 |
| Triphenyltin hydroxide | 76-87-9 |
| Valproic acid | 99-66-1 |
| Verapamil HCl | 152-11-4 |
| Xylene | 1330-20-7 |

[3] Revised 9/17/02
[1] Revised 5/23/02

# ADDENDUM IV
## TEST CHEMICALS FOR THE *IN VITRO* VALIDATION STUDY BY STUDY PHASE

**PHASE Ia**

| | |
|---|---|
| Sodium laurel sulfate | 151-21-3 |

**PHASE Ib**

| | |
|---|---|
| Arsenic III trioxide | 1327-53-3 |
| Ethylene glycol | 107-21-1 |
| Propranolol HCl | 318-98-9, (*3506-09-0, 146874-86-4*)[1] |

**PHASE II**

| | |
|---|---|
| Aminopterin | 54-62-6 |
| Chloramphenicol | 56-75-7 |
| Colchicine | 64-86-8 |
| Cupric sulfate * 5 H2O | 7758-99-8 |
| Lithium I ~~sulfate~~*carbonate*[3] | *554-13-2*~~10377-48-7~~[3] |
| Potassium I chloride | 7447-40-7 |
| 2-Propanol | 67-63-0 |
| Sodium I fluoride | 7681-49-4 |
| Sodium selenate~~*10 H20~~[1] | ~~13413~~*13410*-01-0[1] |

**PHASE III**

| | |
|---|---|
| 1,1,1-Trichloroethane | 71-55-6 |
| 5-Aminosalicylic acid | 89-57-6 |
| Acetaminophen | 103-90-2 |
| Acetonitrile | 75-05-8 |
| Acetylsalicylic acid | 50-78-2 |
| ~~**To be determined**~~[1] | |
| Amitriptyline *HCl*[3] | *549-18-8*~~50-48-6~~[3] |
| Atropine sulfate *monohydrate*[3] | *73791-47-6*~~55-48-1, (*17108-73-5*)~~[3] |
| Boric aid | 10043-35-3 |
| Busulphan | 55-98-1 |
| Cadmium II chloride | 10108-64-2 |
| Caffeine | 58-08-2 |
| Carbamazepine | 298-46-4 |
| Carbon tetrachloride | 56-23-5 |
| Chloral hydrate | 302-17-0 |
| Citric Acid | 77-92-9 |
| Cycloheximide | 66-81-9 |
| Dibutylphthalate | 84-74-2 |
| Dichlorvos (DDVP) | 62-73-7 |
| Diethyl phthalate | 84-66-2 |
| Digoxin | 20830-75-5 |
| Dimethylformamide | 68-12-2 |
| Diquat | 2764-72-9 |
| Disulfoton | 298-04-4 |
| Endosulfan | 115-29-7 |
| Epinephrine bitartrate | 51-42-3 |

[3] Revised 9/17/02
[1] Revised 5/23/02

## ADDENDUM IV (CONT.)

**PHASE III (cont.)**

| | |
|---|---|
| Ethanol | 64-17-5 |
| Fenpropathrin | 39515-41-8 |
| Gibberellic acid | 77-06-5 |
| Glutethimide | 77-21-4 |
| Glycerol | 56-81-5 |
| Haloperidol | 52-86-8 |
| Hexachlorophene | 70-30-4 |
| Lactic acid | 50-21-5 |
| Lindane | 58-89-9 |
| Meprobamate | 57-53-4 |
| Mercury II chloride | 7487-94-7 |
| Methanol | 67-56-1 |
| Nicotine | 54-11-5 |
| Paraquat | 1910-42-5, (*3765-78-4,57593-74-5,65982-50-5,136338-65-3,205105-68-6,247050-57-3*)[3] |
| Parathion | 56-38-2 |
| Phenobarbital | 50-06-6 |
| Phenol | 108-95-2 |
| *Physostigmine*[1] | *57-47-6*[1] |
| Phenylthiourea | 103-85-5 |
| Potassium cyanide | 151-50-8 |
| Procainamide *HCl*[3] | ~~51-06-9~~*614-39-1*[3] |
| Propylparaben | 94-13-3 |
| Sodium arsenite | 7784-46-5 |
| Sodium chloride | 7647-14-5 |
| Sodium dichromate dihydrate | 7789-12-0 |
| Sodium hypochlorite | 8007-59-8, (*7681-52-9*)[3] |
| Sodium oxalate | 62-76-0 |
| Strychnine | 57-24-9 |
| Thallium I sulfate | 7446-18-6 |
| Trichloroacetic acid | 76-03-9 |
| Triethylene melamine | 51-18-3 |
| Triphenyltin hydroxide | 76-87-9 |
| Valproic acid | 99-66-1 |
| Verapamil HCl | 152-11-4 |
| Xylene | 1330-20-7 |

[1] Revised 5/23/02
[3] Revised 9/17/02

# ADDENDUM V

## ASSUMPTIONS FOR CALCULATION OF AMOUNT OF TEST MATERIAL NEEDED FOR EACH TESTING FACILITY

| | Chemical Amount | Assumption |
|---|---|---|
| **Phase I** | | |
| Test in 3 solvents | 300 mg | Chemical must be tested in all 3 solvents |
| Test in 3 replicate assays | 300 | 3 replicate assays must be performed |
| Repeat 3 times | 300 | 3 replicate assays must be repeated 3 times |
| **Phase I Amount/Testing Facility** | 900 mg | |
| x 3 Testing Facilities | 2700 | Assumes 3 labs participate in study |
| 2 Archive samples (3 solubility + 3 assays) | 1200 | Archive samples use same amount of chemical as testing sample |
| **Total Phase I Amount** | 3900 mg | |
| **Phase II** | | |
| Test in 3 solvents | 300 mg | Chemical must be tested in all 3 solvents |
| Test in 3 replicate assays | 300 | 3 replicate assays must be performed |
| Repeat 2 times | 200 | 2 replicate assays must be repeated 3 times |
| **Phase II Amount/Testing Facility** | 800 mg | |
| x 3 Testing Facilities | 2400 | Assumes 3 labs participate in study |
| 2 Archive samples (3 solubility + 3 assays) | 1200 | Archive samples use same amount of chemical as testing sample |
| **Total Phase II Amount** | 3600 mg | |
| **Phase III** | | |
| Test in 3 solvents | 300 mg | Chemical must be tested in all 3 solvents |
| Test in 3 replicate assays | 300 | 3 replicate assays must be performed |
| **Phase III Amount/Testing Facility** | 600 mg | |
| x 3 Testing Facilities | 1800 | Assumes 3 labs participate in study |
| 2 Archive samples (3 solubility + 3 assays) | 1200 | Archive samples use same amount of chemical as testing sample |
| **Total Phase III Amount** | 3000 mg | |

Specification of 4 g of chemical per Testing Facility in **Section 5.1.3** was chosen to allow a generous amount of error (in the direction of the Testing Facilities being provided with more chemical than necessary) in the calculations and assumptions made here.

# Appendix H

## Candidate Reference Oral $LD_{50}$ Data

**H1 Rat and Mouse Oral $LD_{50}$ Database ..... H-3**

**H2 Evaluation of the Candidate Reference Oral $LD_{50}$ Data ..... H-39**

***[This Page Intentionally Left Blank]***

# Appendix H1

## Rat and Mouse Oral $LD_{50}$ Database

***[This Page Intentionally Left Blank]***

**Rat and Mouse Oral LD50 Database**

| Reference Substance | Rat Oral $LD_{50}$[1] mg/kg | Rat Oral $LD_{50}$[2] mg/kg Primary Reference | $LD_{50}$[3] mg/kg (range) Primary Reference | $LD_{50}$ Calculation Method[4] Primary Reference | Animal Information (stock, weight, age) | Gender | Route and/or Method of Exposure | Dose | Observations | Notes | Reference Substance Source | Primary Reference |
|---|---|---|---|---|---|---|---|---|---|---|---|---|
| 1,1,1-Trichloroethane | 9600 | 9600 | 7384 - 12480 | NA | rats | NA | oral | NA | NA | reference in Russian | NA | Paligov VI, Khananaev LI, Goinatskii MG, Gavrilyuk VM. 1990. Hygienic substantiation of content of methylchloroform in water bodies. Gigiena Naselennykh Mest 29:45-49. **(RTECS REFERENCE)** |
| 1,1,1-Trichloroethane | 9600 | 10300 | 8270 - 12800 (95% CL) | Thompson method of moving averages | Wistar white rats; 175 - 250 g | female | oral; stomach tube | single dose; undiluted; no more than 7 cc administered | all surviving rats observed up to 2 weeks; 35 rats used | NA | NA | Torkelson TR, Oyen F, McCollister DD, Rowe VK. 1958. Toxicity of 1,1,1-trichloroethane as determined on laboratory animals and human subjects. Am Ind Hyg Assoc J 19:353-362. *The Dow Chemical Company, Midland, MI* |
| 1,1,1-Trichloroethane | 9600 | 12300 | 11000 - 13700 (95% CL) | Thompson method of moving averages | Wistar white rats; 175 - 250 g | male | oral; stomach tube | single dose; undiluted; no more than 7 cc administered | all surviving rats observed up to 2 weeks; 35 rats used | this compound is an inhibited form | NA | Torkelson TR, Oyen F, McCollister DD, Rowe VK. 1958. Toxicity of 1,1,1-trichloroethane as determined on laboratory animals and human subjects. Am Ind Hyg Assoc J 19:353-362. *The Dow Chemical Company, Midland, MI* |
| 1,1,1-Trichloroethane | 9600 | 12600 | 926 - 17100 (CL) | Litchfield and Wilcoxon | Holtzman, Sprague-Dawley albino rats; 215-330 g; adult | male | oral; gastric intubation | single dose; undiluted; 464, 1000, 2150, 4660, 10000, 21500 mg/kg doses | observations recorded at 1, 4, 24 hours, daily thereafter for 7 days; 5 dead at highest dose; depression, ataxia, labored respiration, salivation, ptosis, excessive urination, diarrhea | 3-4 hour fasting period; stabilized 1,1,1-trichloroethane; inhibited formulation | NA | from EPA TSCATS database; Acute Oral Administration-Rats Acute Dermal Application-Rabbits Acute Eye Irritation-Rabbits Primary Skin Irritation-Rabbits Subacute (Four-Week) Inhalation; 1969. EPA Doc. No. 878210366, Fiche No. OTS0205891; *Ethyl Corp.* |
| 1,1,1-Trichloroethane | 9600 | 12627 | 5356 - 29765 (CL) | Litchfield and Wilcoxon | Holtzman, Sprague-Dawley albino rats; 215-330 g; adult | male | oral; gastric intubation | single dose; undiluted; 464, 1000, 2150, 4660, 10000, 21500 mg/kg doses | observations recorded at 1, 4, 24 hours, daily thereafter for 7 days; 5 dead at highest dose; depression, ataxia, labored respiration, salivation, ptosis | 3-4 hour fasting period; stabilized 1,1,1-trichloroethane; inhibited formulation | NA | from EPA TSCATS database; Acute Oral Administration-Rats Acute Dermal Application-Rabbits Acute Eye Irritation-Rabbits Primary Skin Irritation-Rabbits Subacute (Four-Week) Inhalation; 1969. EPA Doc. No. 878210366, Fiche No. OTS0205891; *Ethyl Corp.* |
| 1,1,1-Trichloroethane | 9600 | 16000 | no CL ("all-or-none" response) | Litchfield and Wilcoxon | Holtzman, Sprague-Dawley albino rats; 215-330 g; adult | male | oral; gastric intubation | single dose; undiluted; 464, 1000, 2150, 4660, 10000, 21500 mg/kg doses | observations recorded at 1, 4, 24 hours, daily thereafter for 7 days; 4 dead at highest dose; depression, ataxia, labored respiration, excessive urination, diarrhea, ruffled fur, salivation, piloerection | 3-4 hour fasting period; unstabilized 1,1,1-trichloroethane | NA | from EPA TSCATS database; Acute Oral Administration-Rats Acute Dermal Application-Rabbits Acute Eye Irritation-Rabbits Primary Skin Irritation-Rabbits Subacute (Four-Week) Inhalation; 1969. EPA Doc. No. 878210366, Fiche No. OTS0205891; *Ethyl Corp.* |
| 2-Propanol | 5045 | 4074 (5.19 mL/kg; sp. density = 0.78505; convert LD50 to mg/kg) | 3015 - 5503 | moving average method | Wistar rats; 90-120 g; 3-4 weeks old | male | oral; stomach intubation | doses differ by a factor of 2 in a geometric series | 14 day observation; dose, number of dead/total: 16 mL/kg -- 3/3; 8 mL/kg -- 5/5; 4 mL/kg -- 1/5 | non-fasted; tested in 1975; 13 rats used | NA | from EPA TSCATS database; Range Finding Toxicity Studies With Isopropanol Recovery Column, Side Stream Decanter Make With Cover Letter Dated 020987; EPA Document No. 86870000097 Fiche No. OTS0513282; *Union Carbide Corp.; Carnegi Mellon 1976* |
| 2-Propanol | 5045 | 4396 (5.6 mL/kg; sp. density = 0.78505; convert LD50 to mg/kg) | 3297 - 5809 (95% CL; 4.2 - 7.4 mL/kg; sp. density = 0.78505; convert LD50 to mg/kg ) | Litchfield and Wilcoxon method and probit analysis | Sprague-Dawley rats; 16-50 g; 14 days | male and female | oral | solvent used in undiluted form | animals observed for a week after medication | nonfasted rats; 6-12 rats of both sexes used for studies; solvent used in undiluted form | analytical grade meeting A.C.S. specifications | Kimura ET, Ebert DM, Dodge PW. 1971. Acute toxicity and limits of solvent residue for sixteen organic solvents. Toxicol Appl Pharmacol 19:699-704. *Abbott Laboratories, Chicago, IL* |
| 2-Propanol | 5045 | 4500 | 3500 - 5800 (95% CL) | UDP | Sprague-Dawley rats; ~ 7 weeks | female | oral gavage | undiluted dose (g/kg) 3.5, 4.5, 5.8, 7.5 | clinical observations: soft stools, diarrhea, decreased limb tone, hypoactivity, hypothermia, lacrimation, pinna and pain reflex absent, red-stained nose, mouth, and eyes, dyspnea, brown-stained urogenital or anal region, bradypnea and piloerection, ataxia; dose (g/kg), rats dead: 3.5-0/2; 4.5-2/4; 5.8-2/2; 7.5-1/1 | 18-20 hour fasted rats; 1-4 rats per dose; GLP study | NA | from EPA TSCATS database; Acute Oral Toxicity (Up/Down Method) Report with Cover Letter Dated 020987; 1983. EPA Document No. 86870000160, Fiche No. OTS0513345; *Hazelton Labs;* Hazelton 1983 |
| 2-Propanol | 5045 | 4710 (6.0 mL/kg; sp. density = 0.78505; convert LD50 to mg/kg) | 4082 - 5495 (95% CL; 5.2 - 7.0 mL/kg; sp. density = 0.78505; convert LD50 to mg/kg) | Litchfield and Wilcoxon method and probit analysis | Sprague-Dawley rats; 80-160 g; young adult (4-6 weeks according to Taconic Farms) | male | oral | solvent used in undiluted form | animals observed for a week after medication | nonfasted rats; groups of 6 rats used for the studies; solvent used in undiluted form | analytical grade meeting A.C.S. specifications | Kimura ET, Ebert DM, Dodge PW. 1971. Acute toxicity and limits of solvent residue for sixteen organic solvents. Toxicol Appl Pharmacol 19:699-704. *Abbott Laboratories, Chicago, IL* |
| 2-Propanol | 5045 | 5045 | 4650 - 5400 | NA | rats | female? | oral | NA | NA | reference in Russian | NA | Antonova VI, Salmina ZH. 1978. The maximal permissible concentration of isopropyl alcohol in water bodies with due regards for its action on the gonads and the progeny. Gigiena i Sanitariya 43(1):9-11. **(RTECS REFERENCE)** |
| 2-Propanol | 5045 | 5087 (6.48 mL/kg; sp. density = 0.78505; convert LD50 to mg/kg) | 3768 - 6877 | moving average method | Wistar rats; 90-120 g; 3-4 weeks old | male | oral; stomach intubation | doses differ by a factor of 2 in a geometric series | 14 day observation;dose, number of dead/total: 10mL/kg - 5/5; 5 mL/kg - 1/5 | non-fasted; tested in 1971; 10 rats used | NA | from EPA TSCATS database; Isopropanol, Anhydrous Range Finding Toxicity Studies with Cover Letter Dated 020987, (1971), EPA Document No. 86870000102, Fiche No. OTS0513287; *Carnegie-Mellon Inst. of Res. 1971* |
| 2-Propanol | 5045 | 5300 | 4100 - 7000 (95% CL) | UDP | Sprague-Dawley rats; ~ 7 weeks | male | oral gavage | undiluted dose (g/kg) 4.5, 5.8, 7.5, 9.8 | clinical observations: soft stools, diarrhea, ataxia, decreased limb tone, hypoactivity, hypothermia, lacrimation, pinna and pain reflex absent, red-stained nose, mouth and eyes, brown-stained urogenital or anal region, dyspnea, bradypnea and piloerection; dose (g/kg), rats dead:4.5-0/2; 5.8-2/3; 7.5-3/3; 9.8-1/1 | 18-20 hour fasted rats; 1-3 rats per dose; GLP study | NA | from EPA TSCATS database; Acute Oral Toxicity (Up/Down Method) Report with Cover Letter Dated 020987, (1983), EPA Document No. 86870000160, Fiche No. OTS0513345; *Hazelton Labs;* Hazelton 1983 |
| 2-Propanol | 5045 | 5338 (6.8 mL/kg; sp.density is 0.78505; convert LD50 to mg/kg) | 4161 - 6908 (95% CL; 5.3 - 8.8 mL/kg; sp. density = 0.78505; convert LD50 to mg/kg) | Litchfield and Wilcoxon method and probit analysis | Sprague-Dawley rats; 300-470 g; older adult (9-18 weeks according to Taconic Farms) | male | oral | solvent used in undiluted form | animals observed for a week after medication | nonfasted rats; groups of 6 rats used for the studies; solvent used in undiluted form | analytical grade meeting A.C.S. specifications | Kimura ET, Ebert DM, Dodge PW. 1971. Acute toxicity and limits of solvent residue for sixteen organic solvents. Toxicol Appl Pharmacol 19:699-704. *Abbott Laboratories, Chicago, IL* |

**Rat and Mouse Oral LD50 Database**

| Reference Substance | Rat Oral $LD_{50}$[1] mg/kg | Rat Oral $LD_{50}$[2] mg/kg Primary Reference | $LD_{50}$[3] mg/kg (range) Primary Reference | $LD_{50}$ Calculation Method[4] Primary Reference | Animal Information (stock, weight, age) | Gender | Route and/or Method of Exposure | Dose | Observations | Notes | Reference Substance Source | Primary Reference |
|---|---|---|---|---|---|---|---|---|---|---|---|---|
| 2-Propanol | 5045 | 5840 | NA | based on assumption that probit mortality vs log dose has same slope as similar chemical | Sherman rats; 90 -120 g; 4-5 weeks | male | oral gastric intubation | in aqueous solution; doses (in g/kg) differ by 1 log to bracket LD50, then refine LD50 with doses in a series of antilog 1.1, 1.3, 1.5, etc. | LD50 based on mortalities during a 14 day period | 6 rats/dose at doses that differ by 1 log to bracket LD50 (given 1 week apart); then refined LD50 with 10 rats/dose in a dose series of antilog 1.1, 1.3, 1.5, etc.; assumed to use materials/methods of Smyth & Carpenter (1944) except for reported changes | reagent grade | Smyth HF Jr, Carpenter CP. 1948. Further experience with the range finding test in the industrial toxicology laboratory. J Ind Hyg Toxicol 30: 63-68. (LD50 value)<br>Smyth HF Jr, Carpenter CP. 1944. The place of the range-finding test in the industrial toxicology laborotory. J Ind Hyg Toxicol 26:269-273. (most materials/methods). |
| 5-Aminosalicylic acid | 2800 | 2800 | 1781 - 3819 (95% CL) | Miller and Tainter (1944) | CDR Sprague-Dawley albino rats; male 288-346 g; 9-12 weeks old | male | oral; intubation | single dose; 2500, 3500, 5000 mg/kg doses; conc. 250, 350, 500 mg/mL; 10 mL dose vol.; methylcellulose vehicle | 14 day observation; initial checks at 1, 2, and 4 hours after administration; 2 daily thereafter | 15 rats used (five/dose level); fasted overnight; GLP | Monsanto Company | from EPA TSCATS database; Acute Toxicity Study in Rats Administered 10 Materials (final report) with Cover Letter dated 062669, (1969), EPA Doc. No. 40-6942188, Fiche No. OTS0519234; *Monsanto Co./Bio/dynamics* |
| 5-Aminosalicylic acid | 2800 | 3450 | 2513 - 4387 (95% CL) | Miller and Tainter (1944) | CDR Sprague-Dawley albino rats; male 288-346 g; female 225-267 g; 9-12 weeks old | male and female (equal numbers) | oral; intubation | single dose; 2500, 3500, 5000 mg/kg doses; conc. 250, 350, 500 mg/mL; 10 mL dose vol.; methylcellulose vehicle | 14 day observation; initial checks at 1, 2, and 4 hours after administration; 2 daily thereafter | 30 rats used (five/sex/dose level); fasted overnight; GLP; used same animals as 2800 and 4200 mg/kg values from Monsanto 1969 | Monsanto Company | from EPA TSCATS database; Acute Toxicity Study in Rats Administered 10 Materials (final report) with Cover Letter dated 062669, (1969), EPA Doc. No. 40-6942188, Fiche No. OTS0519234; *Monsanto Co./Bio/dynamics* |
| 5-Aminosalicylic acid | 2800 | 4200 | 2863 - 5537 (95% CL) | Miller and Tainter (1944) | CDR Sprague-Dawley albino rats; female 225-267 g; 9-12 weeks old | female | oral; intubation | single dose; 2500, 3500, 5000 mg/kg doses; conc. 250, 350, 500 mg/mL; 10 mL dose vol.; methylcellulose vehicle | 14 day observation; initial checks at 1, 2, and 4 hours after administration; 2 daily thereafter; toxicologic signs: soft stool, hyponea, hypoactivity; urinary and fecal staining | 15 rats used (five/dose level); fasted overnight; GLP | Monsanto Company | from EPA TSCATS database; Acute Toxicity Study in Rats Administered 10 Materials (final report) with Cover Letter dated 062669, (1969), EPA Doc. No. 40-6942188, Fiche No. OTS0519234; *Monsanto Co./Bio/dynamics* |
| Acetaminophen | 1944 | 1944 | NA | Litchfield and Wilcoxon | Wistar rats; 130-150 g | male and female | stomach tube | 5 mL/kg bw in 1% carboxymethyl-cellulose | observed 3 weeks | fasted 18 hours before dosing | NA | Kammerer F-J, Schleyerbach R. 1987. U.S. Patent 4,636,513. Isoxazole derivatives and medicaments containing these compounds (January 13, 1987). **(RTECS REFERENCE)** |
| Acetaminophen | 1944 | 2404 | +/- 95 (S.E.) | Miller and Tainter (1944) | Charles River CD and Sprague-Dawley rat strains; >100 g; adult | NA | oral intubation | up to 50 mL/kg | rats observed for 7 days; observed up to 14 days when heavy metals or other compounds that produce latent death were investigated | fasted overnight | NA | Yeary RA, Benish RA, Finkelstein M. 1966. Acute Toxicity of Drugs in Newborn Animals. Journal of Pediatrics 69(4):663-667.<br>*Dept. of Veterinary Preventive Medicine, Ohio State University, Columbus, OH* |
| Acetonitrile | 2460 | 157 (0.2 mL/kg; sp. density = 0.7857; convert LD50 to mg/kg | 79 - 236 (95% CL; 0.1 - 0.3 mL/kg; sp. density = 0.7857; convert LD50 to mg/kg) | Litchfield and Wilcoxon method and probit analysis | Sprague-Dawley rats; 16-50 g; 14 days | male and female | oral | solvent used in undiluted form | animals observed for a week after medication | nonfasted rats; 6-12 rats of both sexes used for studies; solvent used in undiluted form | analytical grade meeting A.C.S. specifications | Kimura ET, Ebert DM, Dodge PW. 1971. Acute toxicity and limits of solvent residue for sixteen organic solvents. Toxicol Appl Pharmacol 19:699-704. *Abbott Laboratories, Chicago, IL* |
| Acetonitrile | 2460 | 1320 (1.68 mL/kg; sp. density = 0.7839; convert LD50 to mg/kg) | 972 - 1799 (1.24 - 2.27 mL/kg; sp. density = 0.7839; convert LD50 to mg/kg) | NA | Carworth Farms Wistar or Nelson albino rats; 90-112g | male | oral gastric intubation | undiluted cmpd; single dose | NA | non-fasted | Union Carbide Chemicals Company | Pozzani UC, Carpenter CP, Palm PE, Weil CS, Nair JH. 1959. An investigation of the mammalian toxicity of acetonitrile. J Occup Med 1: 634-642. *Mellon Institute, Pittsburgh, PA* |
| Acetonitrile | 2460 | 1453 | 1123 - 1879 (95% CL) | acceptable methods (e.g., Bliss, Litchfield and Wilcoxon, Weil, Thompson, etc.) | Sprague-Dawley rats | male | oral gavage | single dose | 14 day observation; toxicity symptoms: ptosis, posture, respiratory effects, lethargy, ataxia, convulsions; time to onset of signs < 1 day; duration of signs 5 days; 5 rats dead (average per test) | 3 dose levels (5 male each); 15 rats used; OECD TG401 (1981) followed for experimental procedures | NA | Vandenheuvel MJ, Clark DG, Fielder RJ, Koundakjian PP, Oliver GJA, Pelling D, Tomlinson NJ, Walker AP. 1990. Jul. The International Validation Of A Fixed-Dose Procedure As An Alternative To The Classical LD50 Test Food And Chemical Toxicology 28(7):469-482. |
| Acetonitrile | 2460 | 1623 (2.07 mL/kg; sp. density = 0.7839; convert LD50 to mg/kg | 1050 - 2524 (1.34 - 3.22 mL/kg; sp. density = 0.7839; convert LD50 to mg/kg | NA | Carworth Farms Wistar or Nelson albino rats; 90-112g | male | oral gastric intubation | undiluted cmpd; single dose | NA | non-fasted | Union Carbide Chemicals Company | Pozzani UC, Carpenter CP, Palm PE, Weil CS, Nair JH. 1959. An investigation of the mammalian toxicity of acetonitrile. J Occup Med 1: 634-642. *Mellon Institute, Pittsburgh, PA* |
| Acetonitrile | 2460 | 1730 | 1100 - 2720 | NA | Carworth Farms Wistar or Nelson albino rats; 90-112g | female | oral gastric intubation | 0.1 in corn oil; single dose | NA | non-fasted | Union Carbide Chemicals Company | Pozzani UC, Carpenter CP, Palm PE, Weil CS, Nair JH. 1959. An investigation of the mammalian toxicity of acetonitrile. J Occup Med 1: 634-642. *Mellon Institute, Pittsburgh, PA* |
| Acetonitrile | 2460 | > 2000 | NA | acceptable methods (e.g., Bliss, Litchfield and Wilcoxon, Weil, Thompson, etc.) | Sprague-Dawley rats | female | oral gavage | single dose | 14 day observation; toxicity symptoms: Ptosis, posture, respiratory effects, lethargy, ataxia, convulsions; time to onset of signs < 1day; duration of signs 5 days; 5 rats dead (average per test) | 3 dose levels (5 female each); 15 rats used; OECD TG401 (1981) followed for experimental procedures | | Vandenheuvel MJ, Clark DG, Fielder RJ, Koundakjian PP, Oliver GJA, Pelling D, Tomlinson NJ, Walker AP. 1990. Jul. The International Validation Of A Fixed-Dose Procedure As An Alternative To The Classical LD50 Test Food And Chemical Toxicology 28: (7) 469-482. |
| Acetonitrile | 2460 | 2230 | 1900 - 2620 | NA | Carworth Farms Wistar or Nelson albino rats; 30-54 g; weanlings | female | oral gastric intubation | 0.1 in 1% aqueous Tergitol 7; single dose | NA | non-fasted | Union Carbide Chemicals Company | Pozzani UC, Carpenter CP, Palm PE, Weil CS, Nair JH. 1959. An investigation of the mammalian toxicity of acetonitrile. J Occup Med 1: 634-642. *Mellon Institute, Pittsburgh, PA* |

**Rat and Mouse Oral LD50 Database**

| Reference Substance | Rat Oral $LD_{50}$[1] mg/kg | Rat Oral $LD_{50}$[2] mg/kg Primary Reference | $LD_{50}$[3] mg/kg (range) Primary Reference | $LD_{50}$ Calculation Method[4] Primary Reference | Animal Information (stock, weight, age) | Gender | Route and/or Method of Exposure | Dose | Observations | Notes | Reference Substance Source | Primary Reference |
|---|---|---|---|---|---|---|---|---|---|---|---|---|
| Acetonitrile | 2460 | 2340 | 2030 - 2700 | NA | Carworth Farms Wistar or Nelson albino rats; 90-112g | female | oral gastric intubation | 0.1 in 1% aqueous Tergitol 7; single dose | NA | non-fasted | Union Carbide Chemicals Company | Pozzani UC, Carpenter CP, Palm PE, Weil CS, Nair JH. 1959. An investigation of the mammalian toxicity of acetonitrile. J Occup Med 1: 634-642. *Mellon Institute, Pittsburgh, PA* |
| Acetonitrile | 2460 | 2460 | 1600 - 2780 | NA | Carworth Farms Wistar or Nelson albino rats; 90-120g | male | oral gastric intubation | 0.1 in water; single dose | NA | non-fasted | Union Carbide Chemicals Company | Pozzani UC, Carpenter CP, Palm PE, Weil CS, Nair JH. 1959. An investigation of the mammalian toxicity of acetonitrile. J Occup Med 1: 634-642. *Mellon Institute, Pittsburgh, PA* |
| Acetonitrile | 2460 | 2460 | NA | NA | rat | NA | oral | NA | NA | Duplicate record. Assumed to be the same values from Pozzani et al. (1959), Mellon Institute and Union Carbide. | NA | UCDS** Bibliographic Data: Union Carbide Data Sheet. (Union Carbide Corp., 39 Old Ridgebury Rd., Danbury, CT 06817) (see Pozzani et al. 1959) **(RTECS REFERENCE)** |
| Acetonitrile | 2460 | 2830 | NA | Thompson (1947) and Weil (1952); moving average tables | Manor farms Wistar; 150-200 g | male | oral; stomach intubation | single dose; geometric factor between dosage levels=2; undiluted | 14 day observation | 5 rats per dosage level; fasted overnight | NA | Weil CS, Wright GJ. 1967. Intra- and Interlaboratory Comparative Evaluation of Single Oral Test. Toxicology and Applied Pharmacology 11:378-388. *Mellon Institute, Pittsburgh, PA and The Dow Chemical Company, Midland, MI* |
| Acetonitrile | 2460 | 3064 (3.9 mL/kg; sp. density = 0.7857; convert LD50 to mg/kg) | 2593 - 3614 (95% CL; 3.3 - 4.6 mL/kg; sp. density = 0.7857; convert LD50 to mg/kg) | Litchfield and Wilcoxon method and probit analysis | Sprague-Dawley rats; 80-160 g; young adult | male | oral | solvent used in undiluted form | animals observed for a week after medication | nonfasted rats; groups of 6 rats used for the studies; solvent used in undiluted form | analytical grade meeting A.C.S. specifications | Kimura ET, Ebert DM, Dodge PW. 1971. Acute toxicity and limits of solvent residue for sixteen organic solvents. Toxicol Appl Pharmacol 19:699-704. *Abbott Laboratories, Chicago, IL* |
| Acetonitrile | 2460 | 3360 | NA | Thompson (1947) and Weil (1952); moving average tables | Manor farms Wistar rats; 150-200 g | male | oral; stomach intubation | single dose; geometric factor between dosage levels=2; undiluted | 14 day observation | 5 rats per dosage level; fasted overnight | NA | Weil CS, Wright GJ. 1967. Intra- and Interlaboratory Comparative Evaluation of Single Oral Test. Toxicology and Applied Pharmacology 11:378-388. *Mellon Institute, Pittsburgh, PA and The Dow Chemical Company, Midland, MI* |
| Acetonitrile | 2460 | 3457 (4.4 mL/kg; sp. density = 0.7857; convert LD50 to mg/kg) | 2200 - 5343 (95% CL; 2.8 - 6.8 mL/kg; sp. density = 0.7857; convert LD50 to mg/kg) | Litchfield and Wilcoxon method and probit analysis | Sprague-Dawley rats; 300-470 g; older adult | male | oral | solvent used in undiluted form | animals observed for a week after medication | nonfasted rats; groups of 6 rats used for the studies; solvent used in undiluted form | analytical grade meeting A.C.S. specifications | Kimura ET, Ebert DM, Dodge PW. 1971. Acute toxicity and limits of solvent residue for sixteen organic solvents. Toxicol Appl Pharmacol 19:699-704. *Abbott Laboratories, Chicago, IL* |
| Acetonitrile | 2460 | 3504 (4.47 mL/kg; sp. density = 0.7839; convert LD50 to mg/kg) | 2187 - 5613 (2.79 - 7.16 mL/kg; sp. density is 0.7839; convert LD50 to mg/kg) | NA | Carworth Farms Wistar or Nelson albino rats; 84-114 g | male | oral gastric intubation | undiluted cmpd; single dose | NA | fasted | Union Carbide Chemicals Company | Pozzani UC, Carpenter CP, Palm PE, Weil CS, Nair JH. 1959. An investigation of the mammalian toxicity of acetonitrile. J Occup Med 1: 634-642. *Mellon Institute, Pittsburgh, PA* |
| Acetonitrile | 2460 | 3520 (4.49 mL/kg; sp. density = 0.7839; convert LD50 to mg/kg) | 1419 - 8748 (1.81 - 11.16 mL/kg; sp. density = 0.7839; convert LD50 to mg/kg) | NA | Carworth Farms Wistar or Nelson albino rats; 90-120g | male | oral gastric intubation | undiluted cmpd; single dose | NA | non-fasted | Union Carbide Chemicals Company | Pozzani UC, Carpenter CP, Palm PE, Weil CS, Nair JH. 1959. An investigation of the mammalian toxicity of acetonitrile. J Occup Med 1: 634-642. *Mellon Institute, Pittsburgh, PA* |
| Acetonitrile | 2460 | 3570 | NA | Thompson (1947) and Weil (1952); moving average tables | Manor farms Wistar; 150-200 g | male | oral; stomach intubation | single dose; geometric factor between dosage levels=2; undiluted | 14 day observation | 5 rats per dosage level; fasted overnight | NA | Weil CS, Wright GJ. 1967. Intra- and Interlaboratory Comparative Evaluation of Single Oral Test. Toxicology and Applied Pharmacology 11:378-388. *Mellon Institute, Pittsburgh, PA and The Dow Chemical Company, Midland, MI* |
| Acetonitrile | 2460 | 3717 (4.49 mL/kg; sp. density = 0.7839; convert LD50 to mg/kg) | 1921 - 6436 (2.45 - 8.21mL/kg; sp. density = 0.7839; convert LD50 to mg/kg) | NA | Carworth Farms Wistar or Nelson albino rats; 250 - 318 g; yearlings | female | oral gastric intubation | undiluted cmpd; single dose | NA | non-fasted | Union Carbide Chemicals Company | Pozzani UC, Carpenter CP, Palm PE, Weil CS, Nair JH. 1959. An investigation of the mammalian toxicity of acetonitrile. J Occup Med 1: 634-642. *Mellon Institute, Pittsburgh, PA* |
| Acetonitrile | 2460 | 3800 | NA | based on assumption that probit mortality vs log dose has same slope as similar chemical | Sherman rats; 90 -120 g; 4-5 weeks | male | oral gastric intubation | in aqueous solution; doses (in g/kg) differ by 1 log to bracket LD50, then refine LD50 with doses in a series of antilog 1.1, 1.3, 1.5, etc | LD50 based on mortalities during a 14 day period | 6 rats/dose at doses (in g/kg) that differ by 1 log to bracket LD50 (given 1 week apart); then refined LD50 with 10 rats/dose in a dose series of antilog 1.1, 1.3, 1.5, etc.; assumed to use materials/methods of Smyth & Carpenter (1944) except for reported changes. RC reference | reagent grade | Smyth HF Jr, Carpenter CP. 1948. Further experience with the range finding test in the industrial toxicology laboratory. J Ind Hyg Toxicol 30:63-68. *(RC and 1983/84 RTECS LD50 value)*<br><br>Smyth HF Jr, Carpenter CP. 1944. The place of the range-finding test in the industrial toxicology laborotory. J Ind Hyg Toxicol 26:269-273. (most materials/methods) |
| Acetonitrile | 2460 | 4050 | | Litchfield and Wilcoxon (1948) | Sprague-Dawley rats; 175-260 g | | oral | undiluted; 3220 - 4970 mg/kg doses | observatons recorded frequently on the day of dosing, daily thereafter for 14 days; tremors, clonic/tonic convulsions, weight loss; clinical signs appeared within 3 hour after dosing and progessed to death in 24-72 hour | overnight fasted; groups of at least 5 rats per dose | 99+%; Aldrich Chemical Co. | Freeman JJ, Hayes EP. 1985. Acetone potentiation of acute acetonitrile toxicity in rats. J Toxicol Environ Hlth 15:609-621. *Rutgers University, Piscataway, NJ* |
| Acetonitrile | 2460 | 4240 | NA | Thompson (1947) and Weil (1952); moving average tables | Manor farms Wistar rats; 150-200 g | male | oral; stomach intubation | single dose; geometric factor between dosage levels = 2; undiluted | 14 day observation | 5 rats per dosage level; fasted overnight | | Weil CS, Wright GJ. 1967. Intra- and Interlaboratory Comparative Evaluation of Single Oral Test. Toxicology and Applied Pharmacology 11:378-388. *Mellon Institute, Pittsburgh, PA and The Dow Chemical Company, Midland, MI* |

**Rat and Mouse Oral LD50 Database**

| Reference Substance | Rat Oral $LD_{50}$[1] mg/kg | Rat Oral $LD_{50}$[2] mg/kg Primary Reference | $LD_{50}$[3] mg/kg (range) Primary Reference | $LD_{50}$ Calculation Method[4] Primary Reference | Animal Information (stock, weight, age) | Gender | Route and/or Method of Exposure | Dose | Observations | Notes | Reference Substance Source | Primary Reference |
|---|---|---|---|---|---|---|---|---|---|---|---|---|
| Acetonitrile | 2460 | 4490 | 2460 - 8210 | NA | Carworth Farms Wistar or Nelson albino rats; 240-425 g; yearlings | female | oral gastric intubation | 0.1 in 1% aqueous Tergitol 7; single dose | | non-fasted | Union Carbide Chemicals Company | Pozzani UC, Carpenter CP, Palm PE, Weil CS, Nair JH. 1959. An investigation of the mammalian toxicity of acetonitrile. J Occup Med 1: 634-642. *Mellon Institute, Pittsburgh, PA* |
| Acetonitrile | 2460 | 4850 | NA | Thompson (1947) and Weil (1952); moving average tables | Manor farms Wistar rats; 150-200 g | male | oral; stomach intubation | single dose; geometric factor between dosage levels = 2; undiluted | 14 day observation | 5 rats per dosage level; fasted overnight | | Weil CS, Wright GJ. 1967. Intra- and Interlaboratory Comparative Evaluation of Single Oral Test. Toxicology and Applied Pharmacology 11:378-388. *Mellon Institute, Pittsburgh, PA and The Dow Chemical Company, Midland, MI* |
| Acetonitrile | 2460 | 5244 (6.69 mL/kg; sp. density = 0.7839; convert LD50 to mg/kg) | 3222 - 8545 (1.34 - 3.22 mL/kg; sp. density = 0.7839; convert LD50 to mg/kg) | NA | Carworth Farms Wistar or Nelson albino rats; 82-109 g | male | oral gastric intubation | undiluted cmpd; single dose | NA | fasted | Union Carbide Chemicals Company | Pozzani UC, Carpenter CP, Palm PE, Weil CS, Nair JH. 1959. An investigation of the mammalian toxicity of acetonitrile. J Occup Med 1: 634-642. *Mellon Institute, Pittsburgh, PA* |
| Acetonitrile | 2460 | 5450 | NA | Thompson (1947) and Weil (1952); moving average tables | Manor farms Wistar rats; 150-200 g | male | oral; stomach intubation | single dose; geometric factor between dosage levels = 2; undiluted | 14 day observation | 5 rats per dosage level; fasted overnight | NA | Weil CS, Wright GJ. 1967. Intra- and Interlaboratory Comparative Evaluation of Single Oral Test. Toxicology and Applied Pharmacology 11:378-388. *Mellon Institute, Pittsburgh, PA and The Dow Chemical Company, Midland, MI* |
| Acetonitrile | 2460 | 5900 | 4580 - 7220 | NA | rats; 220 +/- 40 g | NA | oral; intragastric | NA | NA | (source of information not provided) | NA | Izmerov NF, Sanotsky IV, Sidorov KK. 1982. Toxicometric Parameters of Industrial Toxic Chemicals under Single Exposure. International Register of Potentially Toxic Chemicals (IRPTC). United Nations Environment Programme (UNEP). Centre of International Projects, GKNT. Moscow, Russia. |
| Acetonitrile | 2460 | 6498 (8.27 mL/kg; sp. density = 0.7857; convert LD50 to mg/kg) | NA | Thompson method; Weil tables | Carworth-Wistar rats; 90 - 120 g; 4 - 5 weeks | male | oral gastric intubation | in aqueous solution; concentration intubated = 10 mg/mL; dosages arranged in a logarithmic series differing by a factor of 2 | LD50 based on mortalities during a 14 day period | non-fasted; groups of 5 rats; single oral dose toxicity | reagent grade | Smyth HF, Weil CS, West JS, Carpenter CP. 1970. An exploration of joint toxic action:II. Equitoxic versus equivolume mixtures. Toxicol Appl Pharmacol 17:498-503. (LD50 value)<br><br>Smyth HF Jr., Carpenter CP., Weil CS., Pozzani, UC., Striegel, JA. And Nycum, JS. 1969. Range-finding toxicity data: List VII. Am Ind Hyg Assoc J 30:470-476. *Carnegie-Mellon University, Pittsburgh, PA.*<br><br>Smyth HF Jr., Carpenter CP., Weil CS., Pozzani, UC., and Striegel, JA. 1962. Range-finding toxicity data: List VI. Am Ind Hyg Assoc J 23:95-107. *Mellon Institute of Industrial Research, Pittsburg, PA* (experimental parameters). |
| Acetonitrile | 2460 | 6500 | NA | Thompson (1947) and Weil (1952); moving average tables | Manor farms Wistar; 150-200 g | male | oral; stomach intubation | single dose; geometric factor between dosage levels = 2; undiluted | 14 day observation | 5 rats per dosage level; fasted overnight | NA | Weil CS, Wright GJ. 1967. Intra- and Interlaboratory Comparative Evaluation of Single Oral Test. Toxicology and Applied Pharmacology 11:378-388. *Mellon Institute, Pittsburgh, PA and The Dow Chemical Company, Midland, MI* |
| Acetonitrile | 2460 | 6687 (8.53 mL/kg; sp. density = 0.7839; convert LD50 to mg/kg) | 4797 - 9328 (6.12 - 11.9 mL/kg; sp. density = 0.7839; convert LD50 to mg/kg) | NA | Carworth Farms Wistar or Nelson albino rats; 90-114 g | female | oral gastric intubation | undiluted cmpd; single dose | NA | non-fasted | Union Carbide Chemicals Company | Pozzani UC, Carpenter CP, Palm PE, Weil CS, Nair JH. 1959. An investigation of the mammalian toxicity of acetonitrile. J Occup Med 1: 634-642. *Mellon Institute, Pittsburgh, PA* |
| Acetonitrile | 2460 | 8120 | NA | Thompson (1947) and Weil (1952); moving average tables | Manor farms Wistar rats; 150-200 g | male | oral; stomach intubation | single dose; geometric factor between dosage levels = 2; undiluted | 14 day observation | 5 rats per dosage level; fasted overnight | NA | Weil CS, Wright GJ. 1967. Intra- and Interlaboratory Comparative Evaluation of Single Oral Test. Toxicology and Applied Pharmacology 11:378-388. *Mellon Institute, Pittsburgh, PA and The Dow Chemical Company, Midland, MI* |
| Acetylsalicylic acid | 200 | 200 | NA | NA | NA | NA | NA | NA | NA | RTECS reference for 200 mg/kg (from Deichman 1969) is a typo; this is a secondary reference which cites Caldwell and Boyd 1966; the value should be 920 mg/kg. | NA | Toxicology of Drugs and Chemicals. Deichmann, W.B., New York, Academic Press, Inc., 1969 **(RTECS REFERENCE)** |
| Acetylsalicylic acid | 200 | 616 | +/- 46 (S.E.) | Miller and Tainter (1944) | FDRL-strain rats; 100 days | female | oral | NA | observed for 7 days post-treatment | NA | NA | Weinberg MS, Goldhamer RE, Carson S. 1966. Acute oral toxicity of various drugs in newborn rats after treatment of the dam during gestation. Toxic Appl Pharmac 9:234-239. *Food and Drug Research Laboratories, Inc., Maspeth, NY* |
| Acetylsalicylic acid | 200 | 920 | +/- 43 (S.E.) | Croxton (1953) and Waugh (1952) | Wistar albino rats; 213 +/- 16 g; 3-5 months | female | oral; stomach tube | single dose; suspension of cmpd in 0.2% gum tragcanth solution in distilled water; 15 mL/kg dose; dose (mg/kg), rats per dose: 0-14; 750-10; 875-10; 1000-10;1125-10; 1250-2; 1500-2; 2000-2 | within 1 hour of dosing rats were drowsy, withdrawn, hearing and vision impared, confused, tense, liquid stool, nasal bleeding, convulsionsrespiratory failure, cardiovascular shock | fasted overnight (16 hour); 60 rats used; 26/46 rats dead from compound | USP grade | Boyd EM. 1959. The acute oral toxicity of acetylsalicylic acid. Toxic Appl Pharmac 1: 229-239. *Queen's University, Ontario, Canada* |
| Acetylsalicylic acid | 200 | 1360 | NA | Reed and Muench (1938) | Wistar albino rats | male and female (75% male) | oral; stomach tube | single dose; solution in 2% acaia in physiological saline; volume of dose is 10 mL/kg | observed for one week; more than 80% of fatalities occurred within 48 hour | 182 rats used; fasted for 18 hour | G.D. Searle and Co. | Eagle E, Carlson AJ. 1950. Toxicity, antipyretic and analgesic studies on 39 compounds including aspirin, phenacetin and 27 derivatives of carbazole and tetrahydrocarbazole. J Pharm Exp Ther 99:450-457. *University of Chicago, Chicago, IL* |
| Acetylsalicylic acid | 200 | 1430 | 1065 - 1921 (95% CL) | Litchfield and Wilcoxon method (1949) | HLA strain albino rats; 95-180 g (mean wt. 122 g) | male | oral intubation | 10-20 mL/kg in 10% gum acacia suspension; 4 doses | toxic effects included neurological abnormality; LD50 at 168 hour (7days); same result at 96 hour; observed at 24 & 48 hour with higher LD50 | rats fasted 15-17 hours before dosing and for 6 hours after intubation; 40 rats used (10/dose) | NA | Boxill GC, Nash CB, Wheeler AG. 1958. Comparative pharmacological and toxicological evaluation of N-acetyl-p-aminophenol, salicylamide, and acetylsalicylic acid. J Am Pharm Assoc 47:479-487. |
| Acetylsalicylic acid | 200 | 1430 | 1065 - 1921 (95% CL) | Litchfield and Wilcoxon method (1949) | HLA strain albino rats; 95-180 g (mean wt. 122 g) | male | oral intubation | 10-20 mL/kg in 10% gum acacia suspension; 4 doses | toxic effects included neurological abnormality; this LD50 at 96 hour (same as 158 hour); observed at 24 & 48 hour with higher LD50 | rats fasted 15-17 hours before dosing and for 6 hours after intubation; 40 rats used (10/dose) | | Boxill GC, Nash CB, Wheeler AG. 1958. Comparative pharmacological and toxicological evaluation of N-acetyl-p-aminophenol, salicylamide, and acetylsalicylic acid. J Am Pharm Assoc 47:479-487. |

**Rat and Mouse Oral LD50 Database**

| Reference Substance | Rat Oral $LD_{50}$[1] mg/kg | Rat Oral $LD_{50}$[2] mg/kg Primary Reference | $LD_{50}$[3] mg/kg (range) Primary Reference | $LD_{50}$ Calculation Method[4] Primary Reference | Animal Information (stock, weight, age) | Gender | Route and/or Method of Exposure | Dose | Observations | Notes | Reference Substance Source | Primary Reference |
|---|---|---|---|---|---|---|---|---|---|---|---|---|
| Acetylsalicylic acid | 200 | 1459 (value converted from mM/kg to mg/kg) | 1009 - 2108 (95% CL) | Weil (1952) | Homozygous Gunn rat (Gunn strain bred from mutant Wistar stock); 137-230 g | male | oral; gastric lavage | single dose; solution in 0.5 - 1.0% (w/v) aqueous methyl cellulose; 10 mL/kg dose vol.; low dose (mg/kg): 176.6, 281.1, 450.4, 720.7, 1153.1; high dose (mg/kg): 450.4, 720.7, 1153.1, 1844.9, 2951.2 | low dose experiment observed for 3 days; high dose observed for 7 days; LD50 determined at 7 days; dose (mg/kg), rats dead per dose: 176.6-0/6; 281.1-0/6; 450.4-0/12; 720.7-1/12; 1153.1-1/12; 1844.9-5/6; 2951.2-5/6 | fasted overnight (16 hour); 6 rats per dose; 60 rats used | NA | Axelsen RA. 1976. Analgesic-induced renal papillary necrosis in the Gunn rat: the comparative nephrotoxicity of aspirin and phenacetin. J Path 120:145-150. *University of Queensland, Queensland, Australia* |
| Acetylsalicylic acid | 200 | 1500 | NA | determined graphically | rats | NA | oral; stomach tube | aqueous with gum ragacanth (cmpd at 5 - 10% concen) | rats dead within 48 hours considered for determination of LD50 | 15 rats used | NA | Hart ER. 1947. The toxicity and analgetic potency of saliccylamide and certain of its derivatives as compared with established analgetic-antipyretic drugs. J Pharmacol Exp Ther 89:205-209. *Jefferson Medical College, Philadelphia, PA* |
| Acetylsalicylic acid | 200 | 1500 | NA | Litchfield and Wilcoxon | Wistar rats; 130-150 g | male and female | stomach tube | 5 mL/kg bw in 1% carboxymethylcellulose | observed 3 weeks | Fasted 18 hour before dosing | NA | Kammerer F-J, Schleyerbach R. 1987. U.S. Patent 4,636,513. Isoxazole derivatives and medicaments containing these compounds (January 13, 1987). **(RTECS REFERENCE)** |
| Acetylsalicylic acid | 200 | 1523 | NA | NA | Upjohn Sprague-Dawley strain albino rats; ~140 g; young | male | oral | single dose; cmpd suspended in 1% aqueous carboxymethylcellulose; 13 dose groups from 400 - 2500 mg/kg | observed for 7 days post-treatment; most deaths occurred during the first day; frequently, animals observed in convulsions prior to death | fasted overnight (12+ hour); 5 rats per dose; 65 rats used | NA | Gray JE, Jones PM, Feeenstra ES. 1960. Comparative effect of acetylsalicylic acid and acetylsalicylic acid anhydride on the non-glandular portion of the stomach. Toxic Appl Pharmac 2:514-522. *The Upjohn Company, Kalamazoo, MI* |
| Acetylsalicylic acid | 200 | 1528 | +/- 156 (S.E.) | Miller and Tainter (1944) | Charles River CD and Sprague-Dawley rat strains; > 100 g | NA | oral intubation | dose up to 50 mL/kg | rats observed for 7 days; observed up to 14 days when heavy metals or other compounds that produce latent death were investigated | fasted overnight | NA | Yeary RA, Benish RA, Finkelstein M. 1966. Acute Toxicity of Drugs in Newborn Animals. Journal of Pediatrics. 69 (4):663-667. *Dept. of Veterinary Preventive Medicine, Ohio State University, Columbus, OH* |
| Acetylsalicylic acid | 200 | 1600 | 1194 - 2144 (95% CL) | Litchfield and Wilcoxon method (1949) | HLA strain albino rats; 95-180 g (mean wt. 122 g) | male | oral intubation | 10-20 mL/kg in 10% gum acacia suspension; 4 doses | toxic effects included neurological abnormality; this LD50 at 24 hour (same as 48 hour); observed at 96 & 168 hour with lower LD50 | rats fasted 15-17 hours before dosing and for 6 hours after intubation; 40 rats used (10/dose) | NA | Boxill GC, Nash CB, Wheeler AG. 1958. Comparative pharmacological and toxicological evaluation of N-acetyl-p-aminophenol, salicylamide, and acetylsalicylic acid. J Am Pharm Assoc 47:479-487. |
| Acetylsalicylic acid | 200 | 1600 | 1194 - 2144 (95% CL) | Litchfield and Wilcoxon method (1949) | HLA strain albino rats; 95-180 g (mean wt. 122 g) | male | oral intubation | 10-20 mL/kg in 10% gum acacia suspension; 4 doses | toxic effects included neurological abnormality; this LD50 at 48 hour (same as 24 hour); observed at 96 & 168 hour with lower LD50 | rats fasted 15-16 hours before dosing and for 6 hours after intubation; 10 rats used | NA | Boxill GC, Nash CB, Wheeler AG. 1958. Comparative pharmacological and toxicological evaluation of N-acetyl-p-aminophenol, salicylamide, and acetylsalicylic acid. J Am Pharm Assoc 47:479-487. |
| Acetylsalicylic acid | 200 | 1761 | +/- 162 (S.E.) | Miller and Tainter (1944) | FDRL-strain rats; 100 days | male | oral | NA | observed for 7 days post-treatment | NA | NA | Weinberg MS, Goldhamer RE, Carson S. 1966. Acute oral toxicity of various drugs in newborn rats after treatment of the dam during gestation. Toxic Appl Pharmac 9:234-239. *Food and Drug Research Laboratories, Inc., Maspeth, NY* |
| Acetylsalicylic acid | 200 | 1880 | 1528 - 2312 (95% CL; slope = 1.27) | Litchfield and Wilcoxon method (1949) | Wistar SPF rats; 150-200 g | female | oral | cmpd suspended in a solution of 10% gum arabic in distilled water | observed for 7 days post-treatment | 10 animals per dose | NA | Zapatero J, Sanfeliu C, Bruseghini L. 1981. Toxicological studies of Plafibride Part 1: Acute toxicity and its determination after several administrations of plafibride. Arsneim Forsch 31:1816-1819. *Chemical Pharmaceutical Research Centre, Barcelona, Spain* |
| Acetylsalicylic acid | 200 | 1960 | 1441 - 2666 (95% CL; slope = 1.64) | Litchfield and Wilcoxon method (1949) | Wistar SPF rats; 150-200 g; | male | oral | cmpd suspended in a solution of 10% gum arabic in distilled water | observed for 7 days | 10 animals per dose | NA | Zapatero J, Sanfeliu C, Bruseghini L. 1981. Toxicological studies of Plafibride Part 1: Acute toxicity and its determination after several administrations of plafibride. Arsneim Forsch 31:1816-1819. *Chemical Pharmaceutical Research Centre, Barcelona, Spain* |
| Acetylsalicylic acid | 200 | 1992 | 1692 - 2345 (95% CL; slope = 1.45) | Litchfield and Wilcoxon method (1949) | Wistar SPF rats; 150-200 g; | male and female | oral | cmpd suspended in a solution of 10% gum arabic in distilled water | observed for 7 days post-treatment | 10 animals per dose | NA | Zapatero J, Sanfeliu C, Bruseghini L. 1981. Toxicological studies of Plafibride Part 1: Acute toxicity and its determination after several administrations of plafibride. Arsneim Forsch 31:1816-1819. *Chemical Pharmaceutical Research Centre, Barcelona, Spain* |
| Acetylsalicylic acid | 200 | > 2000 | | Litchfield and Wilcoxon method (1949) | Sprague-Dawley SPF rats (Charles River, France); 100-110 g | male | oral | suspended in 0.25% carboxymethylcellulose with 0.2% polysorbate 80; doses in geometrical progression | observed for 7 days post-treatment; rats presented no signs | 10 animals per dose; fasted 6 h prior to dosing | NA | Glomot R, Chevalier B, Vannier B. 1976. Toxicological studies on floctafenine. Toxicol Appl Pharmac 36:173-185. |
| Acetylsalicylic acid | 200 | > 2000 | | Litchfield and Wilcoxon method (1949) | Sprague-Dawley SPF rats (Charles River, France); 100-110 g | female | oral | suspended in 0.25% carboxymethylcellulose with 0.2% polysorbate 80; doses in geometrical progression | observed for 7 days post-treatment; rats presented no signs | 10 animals per dose; fasted 6 h prior to dosing | NA | Glomot R, Chevalier B, Vannier B. 1976. Toxicological studies on floctafenine. Toxicol Appl Pharmac 36:173-185. |
| Acetylsalicylic acid | 200 | 2840 | 2075 - 3890 (95% CL) | Litchfield and Wilcoxon method (1949) | Sprague-Dawley CD strain albino rats | male | oral; gavage | single dose; 5 mL/kg dose; min. of 3 dose levels; cmpd suspended in solution of 1% gum acacia vehicle | observed for 7 days post-treatment; LD50 based on number of deaths at 7 days | 20 animals per dose level; 60 animals used; not fasted | Aldrich Chemical Company | Sofia RD. 1977. Alteration of hepatic microsomal enzyme systems and the lethal action of non-steroidal anti-arthritic drugs in acute and chronic models of inflammation. Agents and Actions 7: 289-297. *Wallace Laboratories, Cranbury, NJ* |
| Aminopterin | NA | 7 | NA | Maximum likelihood estimation using log probit model (BMDS by US EPA) | Wistar albino rats; 100-200 g | male and female | oral | used measured samples neutralized before drying or added 2 molar eq NaHCO3 to weighed amounts of free acid; in 09% NaCl at 1 mL/100 g bw | observed for 14 days; deaths delayed until 3rd day; moderate weight loss by 1st day; intoxicated animals lost 20% by 3rd day; severe, watery diarrhea after 48 hour; yellowish brown feces, terminally, grossly stained with blood; deaths/dose: 40 mg/kg-5/6 (3 at 3-4 days, 2 at 5-7 days), 20 mg/kg-5/6 (2 at 3-4 days, 2 at 5-7 days, 1 at 8-14 days), 10 mg/kg-4/6 (3 at 3-4 days, 1 at 5-7 days); 5 mg/kg-2/6 (1 at 3-4 days, 1 at 8-14 days), 2.5 mg/kg-2/6 (2 at 3-4 days), 1.25 mg/kg-0/6 | LD50 calculated by NICEATM; 36 rats used | ampuled and bulk samples from Lederle Laboraotries | Philips FS, Thiersch JB. 1949. Studies of the actions of 4-amino-pteroylglutamic acid in rats and mice. J Pharmacol Exp Ther 95:303-311. |
| Amitriptyline | 320 | 320 | 286 - 359 | Litchfield and Wilcoxon method (1949) | rats | NA | oral | NA | lethality counted after 7 days | 40-50 rats used; reference in German | NA | Ribbentrop VA, Schaumann W. 1965. Pharmakologische Untersuchungen mit Doxepin, einem Antidepressivum mit zentral anticholinerger und sedierender Wirkung. Arzneimittel-Forschung 15:863-868. *Aus den Pharmakologischen Laboratorien der Firma C.F. Boehringer & Soehne Gmbh, Mannheim, Germany* **(RTECS REFERENCE)** |

**Rat and Mouse Oral LD50 Database**

| Reference Substance | Rat Oral $LD_{50}$[1] mg/kg | Rat Oral $LD_{50}$[2] mg/kg Primary Reference | $LD_{50}$[3] mg/kg (range) Primary Reference | $LD_{50}$ Calculation Method[4] Primary Reference | Animal Information (stock, weight, age) | Gender | Route and/or Method of Exposure | Dose | Observations | Notes | Reference Substance Source | Primary Reference |
|---|---|---|---|---|---|---|---|---|---|---|---|---|
| Amitriptyline | 320 | 380 | 300 - 486 (95% CL) | Litchfield and Wilcoxon method (1949) | Wistar strain rats; 200 -300 g | male | oral | NA | 72 hour observations | 8 rats per group used; hydrochloride salt | NA | Tobe A, Yoshida Y, Ikoma H, Tonomura S, Kikumoto R. 1981. Pharmacological evaluation of 2-(4-methylaminobutoxy)diphenylmethane hydrochloride (MCI-2016), a new psychotropic drug with antidepressant activity. Arzneimittelforschung 31(8):1278-85. |
| Arsenic III trioxide | 14.6 | 13 | NA | NA | rats | | oral; stomach tube | NA | violent gastroenteritis, diarrhea, rice water stools | information from the laboratories of Division of Pharmacology, U.S. FDA.; fasted animals | NA | Lehman AJ. 1951. Chemicals in Foods: a report to the association of food and drug officials on current developments. Part II. Pesticides. Quarterly Bulletine (Association of Food and Drug Officials of the United States). Vol.15:122-133. *U.S. FDA* |
| Arsenic III trioxide | 14.6 | 14.6 | NA | NA | rats | male | oral | NA | no clinical picture given | reference is in Russian; not translated | NA | Tulakino NV, Novikov JV. 1987. On the question of reglameutation of arsenic in drinking water of different hardness. Gigiena i Sanitariya. 52 (1):21 -24. **(RTECS REFERENCE)** |
| Arsenic III trioxide | 14.6 | 19.9 (15.1 mg As/kg) | +/- 2.4 (reported as +/- 1.8 mg As/kg) | de Beer (1945) | Sprague-Dawley Albino rats; 125 - 200 g | male | oral; intra-esophageally | pure arsenic trioxide dissolved in distilled water; 0.03 mL per g of bw; max volume 8 mL; dose range 10 - 50 mg As/kg | observed over 96 hours for LD50; experiment lasted 2 weeks; no significance between male or female; 95 dead at 24 hour; No of deaths/dose at 96 hour (male): 10 mg As/kg - 9/30; 20 mg As/kg - 20/30; 30 mg As/kg - 27/30; 40 mg As/kg - 28/30; 50 mg As/kg - 30/30 | rats fasted 24 hour before dosing; 5 groups of 30 rats each (150 total); male and female rats tested; results and information given for male | 99.999% pure | Harrison JWE, Packman EW, Abbott DD. 1958. Acute oral toxicity and chemical and physical properties of arsenic trioxides. AMA Arch ind Health, 17:118-123. *LaWall and Harrison Research Laboratories* |
| Arsenic III trioxide | 14.6 | 32.6 | 28.4 - 36.7 (95% CI) | Finney (1971). Probit Analysis. | NA | male | intubated; single dose | dissolved in distilled water; administered by gavage in volume of 2mL/kg | rats dosed with one of 5 or 6 doses of chemical; deaths recorded daily for 7 days | animals acclimated to environment for 2 weeks before testing; used only healthy rats; all rats assigned to one of 5 to 6 groups of 8 to 10 rats each | Mallinckrodt | Pryor GT, Uyeno ET, et al. 1983. "Assessment of chemicals using a battery of neurobehavioral tests: a comparative study." Neurobehav Toxicol Teratol 5(1): 91-117. *SRI International, Menlo Park, CA; NIEHS, Research Triangle Park, NC* |
| Arsenic III trioxide | 14.6 | 81.5 | 70.5 - 94.3 | Bliss-Probit method | Sprague-Dawley rats; 5 weeks | male | oral gavage | dissolved in saline; range (mg/kg) of doses 51.2, 66.5, 86.5, 112.5, 146.2 | rats observed at 6 hours after dosing and a once a day for 1 - 2 weeks; most rats found dead within 3 days; 27 of 50 rats died; toxic symptoms: vomiting and diarrhea; No of deaths/dose (mg As/kg) at 14 days: 51.2 mg - 0/10; 66.5 mg - 2/10; 86.5 mg - 6/10; 112.5 mg - 9/10; 146.2 mg - 10/10 | animals acclimated to environment for 1 week before testing; 5 groups of10 rats each; fasted 16 hours before dosing; 100% lethal dose = 143.2 mg/kg; 0% lethal dose = 51.2 mg/kg | Kishida Chemical Co., Ltd. | Kitagawa H, Saito H, Sugimoto T, Yanaura S, Kitagawa H, Hosokawa T, Sakamoto K. 1982. Effects of diospropyl-1,3-dithiol-2-yldene malonate (NKK-105) on acute toxicity of various drugs and heavy metals. J Toxicol Sci 7(2):123-34. *Chiba University; Hoshi College of Pharmacy; Showa University -- Japan* |
| Arsenic III trioxide | 14.6 | 138 | +/- 13 (standard error) | Litchfield and Fetig (1941) | wild Norway rats (trapped in Baltimore, MD); 148-493 g (ave = 253 g), adult | male and female | oral gavage | chemical suspended in 10% acacia solution; received appropriate doses in 1mL per 100 g bw | rats survived from 6 - 72 hours | 41 rats used (approx. equal number of male and female); overnight fasting before dosing; assays performed in winter, repeated in summer; LD50s from combined information; final LD50 higher than winter LD50; attributed to not having enough rats in winter. | Merck U.S.P. | Dieke SH, Richter CP. 1946. Comparative assays of rodenticides on wild Norway rats. I. Toxicity. Publ. Health Rep 61:672-679. *Johns Hopkins Hospital, Baltimore, MD* |
| Arsenic III trioxide | 14.6 | 140 | NA | statistical formula based on mortality rates | wild Norway rats | unknown | oral, stomach tube; single dose | a number of individual doses of a cmpd, each dose at a different conc level are given to an equal number of test animals | enteritis and neuritis | NA | NA | Peardon DL, Kilbourn E, et al. 1972. "New selective rodenticides." Soap Cosmet Chem Spec 48(12):6. *Rohm and Haas Company, Philadelphia, PA* |
| Arsenic III trioxide | 14.6 | 191.8 (145.2 mg As/kg) | +/- 11.5 (reported as +/- 8.7 mg As/kg) | de Beer (1945) | Sprague-Dawley Albino rats; 125- 200 g | male | oral | pure arsenic trioxide incorporated into 3 g rat Purina chow; rats consumed meal in 1 hour; dose range 301 - 338 mg As/kg | observed over 96 hours for LD50; 2 week experiment; no significance between male or female; 76 dead at 24 hour; No of deaths/dose (mg As/kg) at 96 hour: 301 mg - 0/20; 91 mg - 2/20; 1281 mg - 6/20; 1809 mg -12/20; 2078 mg -18/20; 269 mg - 20/20; 338 mg - 20/20 | rats fasted 24 hour before dosing; 7 groups of 20 rats each (140 total); male and female rats tested; results and information given for male | 99.999% pure | Harrison JWE, Packman EW, Abbott DD. 1958. Acute oral toxicity and chemical and physical properties of arsenic trioxides. AMA Arch ind Health 17:118-123. *LaWall and Harrison Research Laboratories* |
| Arsenic III trioxide | 14.6 | 385 | 350 - 424 (95% CL) | Litchfield and Wilcoxon method | Holtsman rats; 300 -500 g; 100-300 days old (13 - 41 weeks) | male and female | oral; gelatin capsules | 20, 50, 100, 250, 500, 750, 1000 (all in mg/kg) | rats dosed under light anesthesia; death occurred within 4 days | approximately 70 rats used; 24 hour fasting before dosing | Baker Analyzed Reagent with 0.02% impurities | Done AK and Peart AJ. 1971. Acute Toxicities of Arsenical Herbicides. Cinical Toxicology, 4(3):343 - 355. *University of Utah, Salt Lake City, UT* |
| Atropine sulfate | 600 | 600 | 530 - 675 | Litchfield and Wilcoxon method | rats | NA | oral | NA | NA | reference in German | NA | Wirth W, Gosswald R. 1965. Pharmakologische Untersuchungen in der Reihe der Diphenylcarbamidsaurethioester. Arch Int Pharmacodyn 155 (2):393 - 417. **(RTECS REFERENCE)** |
| Atropine sulfate | 600 | 622 | +/- 36 | NA | Sprague-Dawley rats; from Charles River; adult | male | oral | NA | NA | information from: drug applications from pharmaceutical manufacturers, the literature, and FDA labs | NA | Goldenthal EI. 1971. A compilation of LD50 values in newborn and adult animals. Toxicology and Applied Pharamacology 18:185 -207. *Bureau of Drugs, Food and Drug Administration, Dept. of Health, Education, and Welfare, Rockville, MD.* |
| Atropine sulfate | 600 | 698.7 | 629.2 - 776.0 | Bliss-Probit method | Sprague-Dawley rats; 5 weeks | male | oral gavage | dissolved in saline; range (mg/kg) of doses 500, 625, 781, 977 | rats observed at 6 hours after dosing and a once a day for 1 - 2 weeks; most rats dead within 3 days; 20 of 40 rats died; toxic symptoms: decrease of spontaneous movement, myasthenia and coma observed at 10 minutes; stretching of the limbs, abdominal posture, anaerosis and cardiac arrest after convulsions; dose (mg/kg), dead rats per dose: 500 - 1/10; 625 -- 4/10; 781 -- 6/10; 977 -- 10/10 | animals acclimated to environment for 1 week before testing; 4 groups of 10 rats each; fasted 16 hours before dosing; 100% lethal dose = 977 mg/kg; 0% lethal dose = 500 mg/kg | Tokyo Kasei Kogyo Co. | Kitagawa H, Saito H, Sugimoto T, Yanaura S, Kitagawa H, Hosokawa T, Sakamoto K. 1982. Effects of diospropyl-1,3-dithiol-2-yldene malonate (NKK-105) on acute toxicity of various drugs and heavy metals. J Toxicol Sci 7(2):123-34. *Chiba University; Hoshi College of Pharmacy; Showa University -- Japan* |
| Atropine sulfate | 600 | 840 | NA | Rosiello (1979) and Bliss (1938) | rats | male | oral | 200, 400, 800, 1000, 1600 mg/kg | 200 mg/kg: 0/3 dead; 400 mg/kg: 0/3 dead; 800 mg/kg: 1/3 dead; 1600 mg/kg: 3/3 dead; 4 of 12 rats dead; LD50 based on 12 rats used; LD50 recalculated using US EPA Benchmark Dose software; Lorke used data from 1000 mg/kg in range finder for all animal groups; omitted this data in recalculation; orginial LD50 from Lorke = 900 mg/kg | rats acclimated for 5 days; rats observed for 14 days; 4 groups of rats used for each dose (1, 2, 3, 5 rats per group; 11 rats per dose); 9 rats for initial range finding;10 mg/kg - 0/3 dead; 100 mg/kg - 0/3 dead; 1000 mg/kg - 2/3 dead | NA | Lorke D. 1983. A new approach to practical acute toxicity testing. Arch Toxicol 54(4):275-288. *Institut fur Toxikologie, Wuppertal, Federal Republic of Germany* |

**Rat and Mouse Oral LD50 Database**

| Reference Substance | Rat Oral $LD_{50}$[1] mg/kg | Rat Oral $LD_{50}$[2] mg/kg Primary Reference | $LD_{50}$[3] mg/kg (range) Primary Reference | $LD_{50}$ Calculation Method[4] Primary Reference | Animal Information (stock, weight, age) | Gender | Route and/or Method of Exposure | Dose | Observations | Notes | Reference Substance Source | Primary Reference |
|---|---|---|---|---|---|---|---|---|---|---|---|---|
| Atropine sulfate | 600 | 874 | NA | Rosiello (1979) and Bliss (1938) | rats | male | oral | 200, 400, 800, 1000, 1600 mg/kg | 200 mg/kg: 0/5 dead; 400 mg/kg: 0/5 dead; 800 mg/kg: 1/5 dead; 1600 mg/kg: 5/5 dead; 6 of 20 rats dead; LD50 based on 20 rats used; LD50 recalculated using US EPA Benchmark Dose software; Lorke used data from 1000 mg/kg in range finder for all animal groups; omitted this data in recalculation; orginial LD50 from Lorke = 950 mg/kg | rats acclimated for 5 days; rats observed for 14 days; 4 groups of rats used for each dose (1, 2, 3, 5 rats per group; 11 rats per dose); 9 rats for initial range finding;10 mg/kg - 0/3 dead; 100 mg/kg - 0/3 dead; 1000 mg/kg - 2/3 dead | NA | Lorke D. 1983. A new approach to practical acute toxicity testing. Arch Toxicol 54(4):275-288. *Institut fur Toxikologie, Wuppertal, Federal Republic of Germany* |
| Atropine sulfate | 600 | 878 | NA | Rosiello (1979) and Bliss (1938) | rats | male | oral | 200, 400, 800, 1000, 1600 mg/kg | 200 mg/kg: 0/11 dead; 400 mg/kg: 0/11 dead; 800 mg/kg: 2/11 dead; 1600 mg/kg: 11/11 dead; 13 of 44 rats dead; LD50 based on 44 rats used; LD50 recalculated using US EPA Benchmark Dose software; Lorke used data from 1000 mg/kg in range finder for all animal groups; omitted this data in recalculation; orginial LD50 from Lorke = 900 mg/kg | rats acclimated for 5 days; rats observed for 14 days; 4 groups of rats used for each dose (1, 2, 3, 5 rats per group; 11 rats per dose); 9 rats for initial range finding;10 mg/kg - 0/3 dead; 100 mg/kg - 0/3 dead; 1000 mg/kg - 2/3 dead | NA | Lorke D. 1983. A new approach to practical acute toxicity testing. Arch Toxicol 54(4):275-288. *Institut fur Toxikologie, Wuppertal, Federal Republic of Germany* |
| Atropine sulfate | 600 | 1135 | NA | Rosiello (1979) and Bliss (1938) | rats | male | oral | 200, 400, 800, 1000, 1600 mg/kg | 200 mg/kg: 0/1 dead; 400 mg/kg: 0/1 dead; 800 mg/kg: 0/1 dead; 1600 mg/kg: 1/1 dead; 1 of 4 rats dead; LD50 based on 4 rats used; LD50 recalculated using US EPA Benchmark Dose software; Lorke used data from 1000 mg/kg in range finder for all animal groups; omitted this data in recalculation; orginial LD50 from Lorke = 950 mg/kg | rats acclimated for 5 days; rats observed for 14 days; 4 groups of rats used for each dose (1, 2, 3, 5 rats per group; 11 rats per dose); 9 rats for initial range finding;10 mg/kg - 0/3 dead; 100 mg/kg - 0/3 dead; 1000 mg/kg - 2/3 dead | NA | Lorke D. 1983. A new approach to practical acute toxicity testing. Arch Toxicol 54(4):275-288. *Institut fur Toxikologie, Wuppertal, Federal Republic of Germany* |
| Atropine sulfate | 600 | 1136 | NA | Rosiello (1979) and Bliss (1938) | rats | male | oral | 200, 400, 800, 1000, 1600 mg/kg | 200 mg/kg: 0/2 dead; 400 mg/kg: 0/2 dead; 800 mg/kg: 0/2 dead; 1600 mg/kg: 2/2 dead; 2 of 8 rats dead; LD50 based on 8 rats used; LD50 recalculated using US EPA Benchmark Dose software; Lorke used data from 1000 mg/kg in range finder for all animal groups; omitted this data in recalculation; orginial LD50 from Lorke = 950 mg/kg | rats acclimated for 5 days; rats observed for 14 days; 4 groups of rats used for each dose (1, 2, 3, 5 rats per group; 11 rats per dose); 9 rats for initial range finding;10 mg/kg - 0/3 dead; 100 mg/kg - 0/3 dead; 1000 mg/kg - 2/3 dead | NA | Lorke D. 1983. A new approach to practical acute toxicity testing. Arch Toxicol 54(4):275-288. *Institut fur Toxikologie, Wuppertal, Federal Republic of Germany* |
| Boric acid | 2662 | 2660 | +/- 220 (S.E.; slope = 7.7) | Litchfield and Fetig (1941) | rats | NA | oral | NA | NA | 45 rats used | NA | Pfeiffer CC, Hallman LF, Gersh IG. 1945. Boric Acid Ointment. A study of possible intoxication in the treatment of burns. Journal of the American Medical Association 128:266 - 274. *National Naval Medical Center, Bethesda, MD* **(RTECS REFERENCE)** |
| Boric acid | 2662 | 2660 | +/- 200 (S.E.) | NA | rats; 220 +/- 40 g | | oral; intragastric | NA | NA | (source of information not provided); reference in Russian; | NA | Izmerov NF, Sanotsky IV, Sidorov KK. 1982. Toxicometric Parameters of Industrial Toxic Chemicals under Single Exposure. International Register of Potentially Toxic Chemicals (IRPTC). United Nations Environment Programme (UNEP). Centre of International Projects, GKNT. Moscow, Russia. |
| Boric acid | 2662 | 3160 (estimate) | NA | NA | Long Evans rats from Diablo Laboratories; 85-118 g | male | oral; stomach intubation | 50% w/v in distilled water suspension | observed for 14 days; signs included depression, ataxia, convulsion and death | fasted rats; 6 groups of 5 rats each; total of 30 rats | NA | Weir RJ Jr, Fisher RS. 1972. Toxicologic studies on borax and boric acid. Toxicol Appl Pharmac 23:351-364. |
| Boric acid | 2662 | 3450 | 2950-4040 (CL) | NA | Albino Sprague-Dawley rats (Charles River SPF); 267-310 g | male | oral; stomach intubation | 50% w/v in 0.5% aqueous methylcellulose suspension | observed for 14 days; signs included depression, ataxia, convulsion and death | fasted rats; 6 groups of 5 rats each; total of 30 rats | NA | Weir RJ Jr, Fisher RS. 1972. Toxicologic studies on borax and boric acid. Toxicol Appl Pharmac 23:351-364. |
| Boric acid | 2662 | 4080 | 3640-4560 (CL) | NA | Albino Sprague-Dawley rats (Charles River SPF); 206-248 g | female | oral; stomach intubation | 50% w/v in 0.5% aqueous methylcellulose suspension | observed for 14 days; signs included depression, ataxia, convulsion and death | fasted rats; 6 groups of 5 rats each; total of 30 rats | NA | Weir RJ Jr, Fisher RS. 1972. Toxicologic studies on borax and boric acid. Toxicol Appl Pharmac 23:351-364. |
| Boric acid | 2662 | 5140 | 4750 - 5580 (range is +/- 1.96 S.D.) | Thompson method; Weil tables | Carworth-Wistar rats; 90-120 g; 4-5 weeks | male | oral gastric intubation | in aqueous solution; concentration intubated = 200 mg/mL; dosages arranged in a logarithmic series differing by a factor of 2 | LD50 based on mortalities during a 14 day period | non-fasted; groups of 5 rats; single oral dose toxicity | reagent grade | Smyth HF Jr, Carpenter CP, Weil CS, Pozzani UC, Striegel JA, Nycum, JS. 1969. Range-finding toxicity data: List VII. Am Ind Hyg Assoc J 30: 470-476. *Carnegie-Mellon University, Pittsburgh, PA* (LD50 value)<br><br>Smyth HF Jr, Carpenter CP, Weil CS, Pozzani UC, Striegel JA. 1962. Range-finding toxicity data: List VI. Am Ind Hyg Assoc J 23:95-107. *Mellon Institute of Industrial Research, Pittsburg, PA* (experimental parameters) |
| Busufan | 110 (mouse) no rat oral value | 2 | NA | NA | NA | NA | NA | NA | NA | Value used by RC from 1983/84 RTECS. No rat oral LD50 in current RTECS. This study treated rats with 0.13 mg/kg busulfan, which was 7% LD50. LD50 = 1.9 mg/kg | NA | Schmahl D, Osswald H. 1970. Experimental studies on the carcinogenic effects of anticancer chemotherapeutics and immunosuppressive agents. Arzneimittelforschung. Oct;20(10):1461-1467. |
| Busufan | 110 (mouse) no rat oral value | 14 | 6 (SE) | probit method Finney (1962) | JO13 strain rats; 170-250 g; 10-12 weeks | male and female | oral | as aqueous emulsion with tragacanth powder | 30 day observation | fasted rats; rats from CEN Breeding Centre Mol, Belgium from former L strain of Institute of Cancer | NA | Dunjic A, Cuvelier A-M. 1973. Survival of rat bone marrow cells after treatment with Myleran and Endoxan. Experimental Hematology 1:11-21. |
| Busufan | 110 (mouse) no rat oral value | 28 | 21 - 38 (95% CL) | NA | Sprague-Dawley strain rats | male | oral | doses (mg/kg): 20, 30, 40, 50, 100, 150, 200 | observed for 14 days; doses (mg/kg, deaths at 14 days: 20 -- 1/5; 30 -- 2/5; 40, 50, 100, 150, and 200 -- 5/5 | 5 rats per dose; 35 rats used | NA | Kiso to Rinsho. Clinical Report. 1971. (Yubunsha Co., Ltd., 1-5, Kanda Suda-Cho, Chiyoda-ku, KS Bldg., Tokyo 101, Japan. 5(12): 1894. **(RTECS REFERENCE)** |
| Busufan | 110 (mouse) no rat oral value | 29 | 23 - 38 (95% CL) | NA | Sprague-Dawley strain rats | female | oral | doses (mg/kg): 10, 30, 40, 50, 100, 150, 200 | observed for 14 days; doses (mg/kg, deaths at 14 days: 10 -- 1/5; 30 -- 2/5; 40 -- 4/5; 50, 100, 150, and 200 -- 5/5 | 5 rats per dose; 35 rats used | NA | Kiso to Rinsho. Clinical Report. 1971. (Yubunsha Co., Ltd., 1-5, Kanda Suda-Cho, Chiyoda-ku, KS Bldg., Tokyo 101, Japan. 5(12): 1894. **(RTECS REFERENCE)** |

**Rat and Mouse Oral LD50 Database**

| Reference Substance | Rat Oral $LD_{50}$[1] mg/kg | Rat Oral $LD_{50}$[2] mg/kg Primary Reference | $LD_{50}$[3] mg/kg (range) Primary Reference | $LD_{50}$ Calculation Method[4] Primary Reference | Animal Information (stock, weight, age) | Gender | Route and/or Method of Exposure | Dose | Observations | Notes | Reference Substance Source | Primary Reference |
|---|---|---|---|---|---|---|---|---|---|---|---|---|
| Cadmium II chloride | 88 | 47 | 43 - 51 (95% CL) | Thompson and Weil (1952); method of moving averages | albino rats; 2 weeks | male and female | oral; stomach tube | 1 mL/200 g bw | observed after 8 days after single oral administration | 6 dose levels per group, 6 rats per group; 36 rats used | NA | Kostial K, Kello D, Jugo S, Rabar I, Maljkovic T. 1978. Influence of age on metal metabolism and toxicity. Environ Health Perspect 25:81-86. *Yugoslav Academy of Sciences and Art, Zagreb, Yugoslavia* |
| Cadmium II chloride | 88 | 88 | NA | NA | rats | NA | oral; stomach tube | NA | salivation, vomiting, diarrhea; onset within 30 minutes | information from the laboratories of Division of Pharmacology, U.S. FDA.; fasted animals | NA | Quarterly Bulletin--Association of Food and Drug Officials of the United States. (Denver, CO) V.3-38, 1939-74. Lehman AJ. 1951. Chemicals in Foods: a report to the association of food and drug officials on current developments. Part II. Pesticides. Quarterly Bulletine (Association of Food and Drug Officials of the United States). Vol. 15:122 - 133. *U.S. Food and Drug Administration* **(RTECS REFERENCE)** |
| Cadmium II chloride | 88 | 109 | 86 - 136 (95% CL) | Thompson and Weil (1952); method of moving averages | albino rats; 54 weeks | female | oral; stomach tube | 1 mL/200g bw | observed after 8 days after single oral administration | 6 dose levels per group, 6 rats per group; 36 rats used; | NA | Kostial K, Kello D, Jugo S, Rabar I, Maljkovic T. 1978. Influence of age on metal metabolism and toxicity. Environ Health Perspect 25:81-86. *Yugoslav Academy of Sciences and Art, Zagreb, Yugoslavia* |
| Cadmium II chloride | 88 | 132 | 109.4 - 159.3 (95% CL) | Bliss-Probit method | Sprague-Dawley rats; 5 weeks | male | oral gavage | dissolved in saline; range (mg/kg) of doses 66.5, 86.5, 112.5, 146.2, 190.1, 247.1 | rats observed at 6 hours after dosing and a once a day for 1 - 2 weeks; most rats found dead within 3 days; 29 of 60 rats died; toxic symptoms: drooling, diarrhea, nasal bleeding; dose (mg/kg), rats dead per dose: 66.5-0/10; 86.5-1/10; 112.5-3/10; 146.2-6/10; 190.1-9/10; 247.1-10/10 | animals acclimated to environment for 1 week before testing; 6 groups of10 rats each; fasted 16 hours before dosing; 100% lethal dose = 247.1 mg/kg; 0% lethal dose = 66.5 mg/kg | MITSUWA Chemical Co., Ltd. | Kitagawa H, Saito H, Sugimoto T, Yanaura S, Kitagawa H, Hosokawa T, Sakamoto K. 1982. Effects of diiospropyl-1,3-dithiol-2-ylidene malonate (NKK-105) on acute toxicity of various drugs and heavy metals. J Toxicol Sci 7(2):123-34. *Chiba University; Hoshi College of Pharmacy; Showa University -- Japan* |
| Cadmium II chloride | 88 | 170 | 140 - 206 (95% CL) | Thompson and Weil (1952); method of moving averages | albino rats; 18 weeks | female | oral; stomach tube | 1 mL/200 g bw | observed after 8 days after single oral administration | 6 dose levels per group, 6 rats per group; 36 rats used | NA | Kostial K, Kello D, Jugo S, Rabar I, Maljkovic T. 1978. Influence of age on metal metabolism and toxicity. Environ Health Perspect 25:81-86. *Yugoslav Academy of Sciences and Art, Zagreb, Yugoslavia* |
| Cadmium II chloride | 88 | 211 | 182 - 252 (95% CL) | Thompson and Weil (1952); method of moving averages | albino rats; 6 weeks | female | oral; stomach tube | 1 mL/200 g bw; 6 dose levels in each group | observed after 8 days after single oral administration | 6 dose levels per group, 6 rats per group; 36 rats used | NA | Kostial K, Kello D, Jugo S, Rabar I, Maljkovic, T. 1978. Influence of age on metal metabolism and toxicity. Environ Health Perspect 25:81-86. *Yugoslav Academy of Sciences and Art, Zagreb, Yugoslavia* |
| Cadmium II chloride | 88 | 240 | 198 - 291 (95% CL) | Thompson and Weil; 1952; method of moving averages | albino rats; 3 weeks | male and female | oral; stomach tube | 1 mL/200 g bw; 6 dose levels in each group | observed after 8 days after single oral administration | 6 dose levels per group, 6 rats per group; 36 rats used | NA | Kostial K, Kello D, Jugo S, Rabar I, Maljkovic, T. 1978. Influence of age on metal metabolism and toxicity. Environ Health Perspect 25:81-86. *Yugoslav Academy of Sciences and Art, Zagreb, Yugoslavia* |
| Caffeine | 192 | 192 | +/- 18 (S.E.) | NA | albino rats | NA | oral | NA | NA | see Boyd 1959 | NA | Boyd EM. 1965. Caffeine addiction and drug toxicity. The Journal of New Drugs 5:252. (secondary reference) *Queen's University, Canada* **(RTECS REFERENCE)** |
| Caffeine | 192 | 192 | +/- 18 (S.E.) | NA | albino rats; 203 +/-28 g; 3-6 months | female | oral; stomach tube | aqueous solution; 2 mL/kg dose; 0 mg/kg-20 rats; 160 mg/kg-8 rats; 180 mg/kg-16 rats; 200 mg/kg-8 rats; 220 mg/kg-8 rats | 19 rats survived; 21 rats died; death time 300 +/- 96 hours after dosing; survivors: lack of curiosity, weak, tense, hyperreflexia, ataxic, cataleptic stances, swollen and inflammed eyelids,loose stools, tremors, anorexia, loss of body weight, fluctuation in body temperature; normal clinical appearance at 72 hours; dead rats: similar clinical signs as survivors, clinical deterioration progressive from 10th hour till death, didn't eat or drink, diarrhea, loss of body weight, anuric, drop in body temp.; two-thirds died of respiratory failure following tetanic convulsions; remainder died of cardiovascular collapse | fasted for 16 hours; 60 rats used | NA | Boyd EM. 1959. The acute oral toxicity of caffeine. Toxic Appl Pharmac 1: 250-257. *Queen's University, Ontario, Canada* |
| Caffeine | 192 | 247 | 220 - 277 (95% CL; slope=7.7) | Cornfield and Mantel (1950) | Sprague-Dawley CD rats; mean wt. of 164 g; young adult | female | oral intubation | single dose | observed for 15 days; death usually 1-2 days after dosing; diarrhea, wt loss/gain; 40% of female rats died | 15 rats per dose level; 16 hour fasting before dosing; 5 -6 dose levels; 75-90 rats | Schwarz/Mann - Becton Dickinson Co. | Palm PE, Arnold EP, Rachwall PC, Leyczech JC, Teague KW, Kensler CJ. 1978. Evaluation of the teratogenic potential of fresh brewed coffee and caffeine in the rat. Toxic Appl Pharmac 44:1 - 16. *Arthur D. Little, Inc., Cambridge, MA* |
| Caffeine | 192 | 264 | +/- 10 (S.E.) | | CBL Wistar albino rats; 150-200 g | female | intragastric | single dose; range of 200 - 350 mg/kg; dissolved in distilled water; 20 mL/kg volume to each rat | observed for 5 days | no overnight fasting; 50 rats used; groups of 10 rats | Merck Reagent | Boyd EM, Dolman M, Knight LM, Sheppard EP. 1965. The chronic oral toxicity of caffeine. Canad J Physiol Pharm 43:995 - 1007. *Queen's University, Ontario, Canada* |
| Caffeine | 192 | 279 | 259 - 302 (95% CI) | Probit analysis | Crl-CD rats; Charles River Breeding lab; 220 -280 g; 60 days old | male | oral; intragastric intubation | 0.5 - 3.9% suspension; dissolved/suspended in corn oil; single dose; 100, 200, 250, 300, 500 mg/kg doses | observed daily for 14 days; death within 2 days; toxic symptoms: staining of the face, wet perineal area, slight weight loss, lacrimation, lethargy, diarrhea | fasted 24 hours before dosing; 5 groups of 10; 50 rats used; 19 rats died | 99+% pure; Aldrich Chemical Co. | Dashiell OL, Kennedy GL Jr. 1984. The effects of fasting on the acute oral toxicity of nine chemicals in the rat. J Appl Toxicol 4(6): 320-325. *E.I. Du Pont de Nemours & Co., Newark, DE* |
| Caffeine | 192 | 288 | +/- 6 (S.E.) | Linear regression. Boyd (1965) | Wistar albino rats; 125-200 g | male | oral; intragastric dosing | dissolved in distilled water; 20 mL/kg dose; 14 doses ranging from 162 to 354 mg/kg; each dose given to 6 - 10 rats | observations recorded hourly 1st day then at 24 hour intervals; ave time to death is 14 hours; 1 - 40 hours range; cause of early deaths: tonic-clonic convulsions followed by resipiratory failure; for delayed death, immediate cause was hypothermic coma and respiratory failure following loss of corneal reflexes, impaired respiration, pallor, cyanosis, anuria; drop in colonic temperature; hypothermia appeared within 2 hours, peaked at 8 - 24 hour at which time it was dose dependent; hypothermia associated with stupor, anorexia, oligodipsia, loss of body weight, oliguria, aciduria, proteinuria | fasted for 16 hours; 84 - 140 rats used; unanethetized rats | U.S.P. grade | Boyd EM, Liu SJ, Singh J. 1968. The toxicity of aspirin, phenacetin, and caffeine following rectal administration. Clin Toxicol 1:425 - 430. *Queen's University, Ontario, Canada* |
| Caffeine | 192 | 300 | +/- 29 (S.E.) | Linear regression. Boyd (1965) | Wistar albino rats; 125-200 g | male | oral; intragastric dosing | dissolved in distilled water; 20 mL/kg dose; 14 doses ranging from 162 to 354 mg/kg; each dose given to 6 - 10 rats | observations recorded hourly 1st day then at 24 hour intervals; ave time to death is 14 hours; 1 - 40 hours range; cause of early deaths: tonic-clonic convulsions followed by resipiratory failure; for delayed death, immediate cause was hypothermic coma and respiratory failure following loss of corneal reflexes, impaired respiration, pallor, cyanosis, anuria; drop in colonic temperature; hypothermia appeared within 2 hours, peaked at 8 - 24 hour at which time it was dose dependent; hypothermia associated with stupor, anorexia, oligodipsia, loss of body weight, oliguria, aciduria, proteinuria | fasted for 16 hours; 84 - 140 rats used; rats used; rats given thiopental before dosing (anesthetized rats before dosing) | U.S.P. grade | Boyd EM, Liu SJ, Singh J. 1968. The toxicity of aspirin, phenacetin, and caffeine following rectal administration. Clin Toxicol 1:425 - 430. *Queen's University, Ontario, Canada* |

**Rat and Mouse Oral LD50 Database**

| Reference Substance | Rat Oral $LD_{50}$[1] mg/kg | Rat Oral $LD_{50}$[2] mg/kg Primary Reference | $LD_{50}$[3] mg/kg (range) Primary Reference | $LD_{50}$ Calculation Method[4] Primary Reference | Animal Information (stock, weight, age) | Gender | Route and/or Method of Exposure | Dose | Observations | Notes | Reference Substance Source | Primary Reference |
|---|---|---|---|---|---|---|---|---|---|---|---|---|
| Caffeine | 192 | 310 | +/- 33 | NA | rats; 220 +/- 40 g | NA | oral; intragastric | NA | NA | (source of information not provided) | NA | Izmerov NF, Sanotsky IV, Sidorov KK. 1982. Toxicometric Parameters of Industrial Toxic Chemicals under Single Exposure. International Register of Potentially Toxic Chemicals (IRPTC). United Nations Environment Programme (UNEP). Centre of International Projects, GKNT. Moscow, Russia. |
| Caffeine | 192 | 344 | 307 - 383 (95% CI) | Probit analysis | Sprague-Dawley rats; 190-300 g | male | oral gavage | geometric progression of 14 for dosing | observed for 14 days after dosing; | fasted 18 - 20 hours before dosing; conventional LD50 method; groups of 10; 40 rats used | NA | Bruce RD. 1987. A confirmatory study of the up-and-down method for acute oral toxicity testing. Fundam Appl Toxicol 8(1): 97-100. *The Proctor and Gamble Co., Cincinnati, OH* |
| Caffeine | 192 | 355 | 312 - 403 (95% CL; slope=5.1) | Cornfield and Mantel (1950) | Sprague Dawley CD rats; mean wt. of 210 g; young adult | male | oral intubation | single dose; dose in water | observed for 15 days; death usually 1-2 days after dosing; diarrhea, wt loss/gain; 21% of male mice died | 15 rats per dose level; 16 hour fasting before dosing; 5 -6 dose levels; 75-90 rats | Schwarz/Mann - Becton Dickinson Co. | Palm PE, Arnold EP, Rachwall PC, Leyczech JC, Teague KW, Kensler CJ. 1978. Evaluation of the teratogenic potential of fresh brewed coffee and caffeine in the rat. Toxic Appl Pharmac 44:1 - 16. *Arthur D. Little, Inc., Cambridge, MA* |
| Caffeine | 192 | 421 | 320 - 553 (95% CI) | Probit analysis | Sprague-Dawley rats; 190-300 g | male | oral gavage | NA | observed for 7 days | fasted 18 - 20 hours before dosing; Up-and-down LD50 method; 9 rats used | NA | Bruce RD. 1987. A confirmatory study of the up-and-down method for acute oral toxicity testing. Fundam Appl Toxicol 8(1): 97-100. *The Proctor and Gamble Co., Cincinnati, OH* |
| Caffeine | 192 | 483 | 433 -562 (95% CI) | Probit analysis | Crl-CD rats; Charles River Breeding lab; 220 -280 g; 60 days old | male | oral; intragastric intubation | 0.5 - 3.9% suspens; dissolved or suspended in corn oil; single dose; 300, 400, 450, 650 mg/kg doses | observed daily for 14 days; death within 3 days; toxic symptoms: staining of the face, wet perineal area, slight weight loss, lacrimation, lethargy, diarrhea | non fasted; 4 groups of 10; 40 rats used; 15 rats died | 99+% pure; Aldrich Chemical Co. | Dashiell OL, Kennedy GL Jr. 1984. The effects of fasting on the acute oral toxicity of nine chemicals in the rat. J Appl Toxicol 4(6): 320-325. *E.I. Du Pont de Nemours & Co., Newark, DE* |
| Carbamazepine | 1957 | 1957 | NA | NA | rats | NA | oral | NA | NA | reference in Japanese | NA | Japanese Kokai Tokyo Koho Patents. 54-163823 (U.S. Patent and Trademark Office. 79-163823) **(RTECS REFERENCE)** |
| Carbamazepine | 1957 | 4025 | NA | NA | rats; 120-140 g | female | oral | suspension in arabica gum | observed for 8 days | reference paper in German; 20 animals per dose | NA | Stenger Von EG, Roulet FC. 1964. Zur Toxikologie des Antiepilepticum Tegretol. Medicina Experimentalis 11:191-201. |
| Carbon tetrachloride | 2350 | 1020 | 861 - 1211 (95% CL) | Weil (1952) | Wistar-derived Porton strain rats (SPF); 100 - 160 g | male | oral gastric intubation | 1:1 (v/v) mixture in liquid paraffin; lightly anesthetized w/ether; geometric doses by factor of 12 or 144 | deaths observed for 1 week | 18 hour fasting before dosing; 20 - 25 rats used; groups of 5 rats; normal stock diet | NA | McLean AEM, McLean EK. 1966. The effect of diet and 1,1,1-trichloro-2,2-bis (p-chlorophenyl) ethane (DDT) on microsomal hydroxilating enzymes and on sensitivity of rats to carbon tetrachloride poisoning. Biochem J 100:564-571. *Royal Free Hospital, London, UK* |
| Carbon tetrachloride | 2350 | 2343 | 2136 - 2566 (95% CL) | Weil (1952) | Wistar-derived Porton strain rats (SPF); 100 - 160 g | male | oral gastric intubation | 1:1 (v/v) mixture in liquid paraffin; lightly anesthetized w/ether; geometric doses by factor of 1.2 or 1.44 | deaths observed for 1 week | 18 hour fasting before dosing; 20 - 25 rats used; groups of 5 rats; protein-free diet; rats fed protein-free diet 1 - 3 weeks before dosing; continued protein-free diet through out observation period | NA | McLean AEM, McLean EK. 1966. The effect of diet and 1,1,1-trichloro-2,2-bis (p-chlorophenyl) ethane (DDT) on microsomal hydroxilating enzymes and on sensitivity of rats to carbon tetrachloride poisoning. Biochem J 100:564-571. *Royal Free Hospital, London, UK* |
| Carbon tetrachloride | 2350 | 2350 | NA | Rosiello (1979) and Bliss (1938) | rats | male | oral | 1500, 2000, 2800, 3900 mg/kg | 1500 mg/kg: 0/1 dead; 2000 mg/kg: 0/1 dead; 2800 mg/kg: 1/1 dead; 3900 mg/kg: 1/1 dead; 2 of 4 rats dead; LD50 based on 4 rats used | rats acclimated for 5 days; rats observed for 14 days; 4 groups of rats used for each dose (1, 2, 3, 5 rats per group; 11 rats per dose); 9 rats for initial range finding;10 mg/kg - 0/3 dead; 100 mg/kg - 0/3 dead; 1000 mg/kg - 2/3 dead | NA | Lorke D. 1983. A new approach to practical acute toxicity testing. Arch Toxicol 54(4):275-288. *Institut fur Toxikologie, Wuppertal, Federal Republic of Germany* |
| Carbon tetrachloride | 2350 | 2500 | NA | Rosiello (1979) and Bliss (1938) | rats | male | oral | 1500, 2000, 2800, 3900 mg/kg | 1500 mg/kg: 0/2 dead; 2000 mg/kg: 2/2 dead; 2800 mg/kg: 1/2 dead; 3900 mg/kg: 2/2 dead; 5 of 8 rats dead; LD50 based on 8 rats used | rats acclimated for 5 days; rats observed for 14 days; 4 groups of rats used for each dose (1, 2, 3, 5 rats per group; 11 rats per dose); 9 rats for initial range finding;10 mg/kg - 0/3 dead; 100 mg/kg - 0/3 dead; 1000 mg/kg - 2/3 dead | NA | Lorke D. 1983. A new approach to practical acute toxicity testing. Arch Toxicol 54(4):275-288. *Institut fur Toxikologie, Wuppertal, Federal Republic of Germany* |
| Carbon tetrachloride | 2350 | 2500 | NA | Rosiello (1979) and Bliss (1938) | rats | male | oral | 1500, 2000, 2800, 3900 mg/kg | 1500 mg/kg: 0/5 dead; 2000 mg/kg: 3/5 dead; 2800 mg/kg: 3/5 dead; 3900 mg/kg: 5/5 dead; 11 of 20 rats dead; LD50 based on 20 rats used | rats acclimated for 5 days; rats observed for 14 days; 4 groups of rats used for each dose (1, 2, 3, 5 rats per group; 11 rats per dose); 9 rats for initial range finding;10 mg/kg - 0/3 dead; 100 mg/kg - 0/3 dead; 1000 mg/kg - 2/3 dead | NA | Lorke D. 1983. A new approach to practical acute toxicity testing. Arch Toxicol 54(4):275-288. *Institut fur Toxikologie, Wuppertal, Federal Republic of Germany* |
| Carbon tetrachloride | 2350 | 2500 | NA | Rosiello (1979) and Bliss (1938) | rats | male | oral | 1500, 2000, 2800, 3900 mg/kg | 1500 mg/kg: 0/11 dead; 2000 mg/kg: 5/11 dead; 2800 mg/kg: 6/11 dead; 3900 mg/kg: 11/11 dead; 22 of 44 rats dead; LD50 based on same rats used for other Lorke (1983) values | rats acclimated for 5 days; rats observed for 14 days; 4 groups of rats used for each dose (1, 2, 3, 5 rats per group; 11 rats per dose); 9 rats for initial range finding;10 mg/kg - 0/3 dead; 100 mg/kg - 0/3 dead; 1000 mg/kg - 2/3 dead | NA | Archives of Toxicology. (Springer-Verlag, Heidelberger Pl. 3, D-1000 Berlin 33, Fed. Rep. Ger.) V.32- 1974. Lorke D. 1983. "A new approach to practical acute toxicity testing." Arch Toxicol 54(4):275-288. *Institut fur Toxikologie, Wuppertal, Federal Republic of Germany* **(RTECS REFERENCE)** |

**Rat and Mouse Oral LD50 Database**

| Reference Substance | Rat Oral $LD_{50}$[1] mg/kg | Rat Oral $LD_{50}$[2] mg/kg Primary Reference | $LD_{50}$[3] mg/kg (range) Primary Reference | $LD_{50}$ Calculation Method[4] Primary Reference | Animal Information (stock, weight, age) | Gender | Route and/or Method of Exposure | Dose | Observations | Notes | Reference Substance Source | Primary Reference |
|---|---|---|---|---|---|---|---|---|---|---|---|---|
| Carbon tetrachloride | 2350 | 2821 (1.77 mL/kg; sp. density is 1.594; convert LD50 to mg/kg | NA | Thompson method; Weil tables | Carworth-Wistar rats; 90-120 g; 4-5 weeks | male | oral gastric intubation | in aqueous solution; concentration intubated = 10 mg/mL.; dosages arranged in a logarithmic series differing by a factor of 2 | LD50 based on mortalities during a 14 day period | non-fasted; groups of 5 rats; single oral dose toxicity | reagent grade | Smyth HF, Weil CS, West JS, Carpenter CP. (1970). An exploration of joint toxic action:II. Equitoxic versus equivolume mixtures. Toxicol Appl Pharmacol. 17:498-503. (LD50 value)<br><br>Smyth HF Jr, Carpenter CP, Weil CS, Pozzani UC, Striegel JA, Nycum JS. 1969. Range-finding toxicity data: List VII. Am Ind Hyg Assoc J 30:470-476. *Carnegie-Mellon University, Pittsburgh, PA*<br><br>Smyth HF Jr, Carpenter CP, Weil CS, Pozzani UC, Striegel JA. 1962. Range-finding toxicity data: List VI. Am Ind Hyg Assoc J 23:95-107.<br>*Mellon Institute of Industrial Research, Pittsburg, PA* (experimental parameters) |
| Carbon tetrachloride | 2350 | 2850 | NA | Rosiello (1979) and Bliss (1938) | rats | male | oral | 1500, 2000, 2800, 3900 mg/kg | 1500 mg/kg: 0/3 dead; 2000 mg/kg: 0/3 dead; 2800 mg/kg: 1/3 dead; 3900 mg/kg: 3/3 dead; 4 of 412 rats dead; LD50 based on 12 rats used | rats acclimated for 5 days; rats observed for 14 days; 4 groups of rats used for each dose (1, 2, 3, 5 rats per group; 11 rats per dose); 9 rats for initial range finding;10 mg/kg - 0/3 dead; 100 mg/kg - 0/3 dead; 1000 mg/kg - 2/3 dead | NA | Lorke D. 1983. A new approach to practical acute toxicity testing. Arch Toxicol 54(4):275-288. *Institut fur Toxikologie, Wuppertal, Federal Republic of Germany* |
| Carbon tetrachloride | 2350 | 2920 | 2450 - 3470 (95% CL) | NA | rats | male and female | oral; stomach intubation | 10 dosage levels; suspended in corn oilk with acacia; single dose | 190 rats used | NA | NA | McCollister DD, Hollingsworth RL, Oyen F, Rowe VK. 1955. Comparative inhalation toxicity of fumigant mixtures. Arch Ind Health pp.1 - 7. *Dow Chemical, Midland, MI* |
| Carbon tetrachloride | 2350 | 2981 (1.87 mL/kg; sp. density is 1.594; convert LD50 to mg/kg) | slope = 1.62 | Litchfield and Wilcoxon method (1949) | Scho:Wistar C rats; 150-180 g; 56 +/- 2 days | female | oral | single dose; 50 mg/kg bw carbon tetrachloride in 5 mL peanut oil/kg bw | 48 hour observation; LD50 determined on rats monthly for a year and average reported for whole year | reference in German; year 4 | NA | Von Schmidt P, Wolff DL, Burck D, Wilhelm M. 1979. Sensitivity of female Wistar rats to carbon tetrachloride, determined by the LD50, and the hexobarbital sleeping time after a single oral dose. Z Versuchstierkd. 21(3):153-162. *Zentralinstitut fur Arbeitsmedizin der DDR, Berlin, Germany* |
| Carbon tetrachloride | 2350 | 3682 (2.31 mL/kg; sp. density is 1.594; convert LD50 to mg/kg) | slope = 1.83 | Litchfield and Wilcoxon method (1949) | Scho:Wistar C rats; 150-180 g; 56 +/- 2 days | female | oral | single dose; 50 mg/kg bw carbon tetrachloride in 5 mL peanut oil/kg bw | 48 hour observation; LD50 determined on rats monthly for a year and average reported for whole year | reference in German; year 3 | NA | Von Schmidt P, Wolff DL, Burck D, Wilhelm M. 1979. Sensitivity of female Wistar rats to carbon tetrachloride, determined by the LD50, and the hexobarbital sleeping time after a single oral dose. Z Versuchstierkd. 21(3):153-162. *Zentralinstitut fur Arbeitsmedizin der DDR, Berlin, Germany* |
| Carbon tetrachloride | 2350 | 4081 (2.56 mL/kg; sp. density is 1.594; convert LD50 to mg/kg) | slope = 1.60 | Litchfield and Wilcoxon method (1949) | Zam:Wistar C rats; 150-180 g; 56 +/- 2 days | female | oral | single dose; 50 mg/kg bw carbon tetrachloride in 5 mL peanut oil/kg bw | 48 hour observation; LD50 determined on rats monthly for a year and average reported for whole year | reference in German; year 4 | NA | Von Schmidt P, Wolff DL, Burck D, Wilhelm M. 1979. Sensitivity of female Wistar rats to carbon tetrachloride, determined by the LD50, and the hexobarbital sleeping time after a single oral dose. Z Versuchstierkd. 21(3):153-162. *Zentralinstitut fur Arbeitsmedizin der DDR, Berlin, Germany* |
| Carbon tetrachloride | 2350 | 4288 (2.69 ml/kg; sp.density is 1.594; converted LD50 to mg/kg | slope = 1.59 | Litchfield and Wilcoxon method (1949) | Zam:Wistar C rats; 150-180 g; 56 +/- 2 days | female | oral | single dose; 50 mg/kg bw carbon tetrachloride in 5 mL peanut oil/kg bw | 48 hour observation; LD50 determined on rats monthly for a year and average reported for whole year | reference in German; year 3 | NA | Von Schmidt P, Wolff DL, Burck D, Wilhelm M. 1979. Sensitivity of female Wistar rats to carbon tetrachloride, determined by the LD50, and the hexobarbital sleeping time after a single oral dose. Z Versuchstierkd. 21(3):153-162. *Zentralinstitut fur Arbeitsmedizin der DDR, Berlin, Germany* |
| Carbon tetrachloride | 2350 | 4336 (2.72 mL/kg; sp. density is 1.594; convert LD50 to mg/kg) | slope = 1.44 | Litchfield and Wilcoxon method (1949) | Zam:Wistar C rats; 150-180 g; 56 +/- 2 days | female | oral | single dose; 50 mg/kg bw carbon tetrachloride in 5 mL peanut oil/kg bw | 48 hour observation; LD50 determined on rats monthly for a year and average reported for whole year | reference in German; year 2 | NA | Von Schmidt P, Wolff DL, Burck D, Wilhelm M. 1979. Sensitivity of female Wistar rats to carbon tetrachloride, determined by the LD50, and the hexobarbital sleeping time after a single oral dose. Z Versuchstierkd. 21(3):153-162. *Zentralinstitut fur Arbeitsmedizin der DDR, Berlin, Germany* |
| Carbon tetrachloride | 2350 | 4670 (2.93 mL/kg; sp. density is 1.594; convert LD50 to mg/kg) | slope = 1.57 | Litchfield and Wilcoxon method (1949) | Zam:Wistar C rats; 150-180 g; 56 +/- 2 days | female | oral | single dose; 50 mg/kg bw carbon tetrachloride in 5 mL peanut oil/kg bw | 48 hour observation; LD50 determined on rats monthly for a year and average reported for whole year | reference in German; year 1 | NA | Von Schmidt P, Wolff DL, Burck D, Wilhelm M. 1979. Sensitivity of female Wistar rats to carbon tetrachloride, determined by the LD50, and the hexobarbital sleeping time after a single oral dose. Z Versuchstierkd. 21(3):153-162. *Zentralinstitut fur Arbeitsmedizin der DDR, Berlin, Germany* |
| Carbon tetrachloride | 2350 | > 5000 | NA | Dixon (1965) and Bruce (1985) | Fischer 344 rats; 77 days old at test | female | oral gavage | in deionized water; maximum volume dose 10 mL/kg; 5 dose levels: 0, 150, 500, 1500, 5000 mg/kg; single dose | 7 day survival time | fasted overnight; initial dose levels = 100, 1000, and 5000 mg/kg; subsequent doses selected by up-and-down method (Bruce, 1985, 1987); 5 groups of 8 rats each; 40 rats used; 7 15 rats used in first LD50 estimate | analytical grad_; 99+% pure; Aldrich Chemical Co. | Berman E, Schlicht M, Moser VC, MacPhail RC. 1995. A multidisciplinary approach to toxicological screening: I. Systemic toxicity. J Toxicol Environ Health 45(2): 127-43.<br>*Health Effects Res. Lab., U.S.EPA, Research Triangle Park, NC* |
| Carbon tetrachloride | 2350 | 5453 | 4660 - 6404 (95% CI) | Probit analysis | Crl-CD rats from Charles River Breeding lab; 220-280 g; 60 days old | male | oral; intragastric intubation | 15 - 45% solution dissolved or suspended in corn oil; single dose; 2500, 3000, 4000, 5000, 8000, 10000, 11000 mg/kg doses | observed daily for 14 days; death within 2 days; toxic symptoms: salivation, weakness, pallor, lethargy, diarrhea, weight loss | 24 hour fast before dosing; 7 groups of 10; 70 rats used; 35 rats died; doses of 10000 mg/kg or greater administered in 2 portions at 15 minutes apart | 99+% pure; E.I. Du Pont de Nemours | Dashiell OL, Kennedy GL Jr. 1984. The effects of fasting on the acute oral toxicity of nine chemicals in the rat. J Appl Toxicol 4(6): 320-325. *E.I. Du Pont de Nemours & Co., Newark, DE* |

**Rat and Mouse Oral LD50 Database**

| Reference Substance | Rat Oral $LD_{50}$[1] mg/kg | Rat Oral $LD_{50}$[2] mg/kg Primary Reference | $LD_{50}$[3] mg/kg (range) Primary Reference | $LD_{50}$ Calculation Method[4] Primary Reference | Animal Information (stock, weight, age) | Gender | Route and/or Method of Exposure | Dose | Observations | Notes | Reference Substance Source | Primary Reference |
|---|---|---|---|---|---|---|---|---|---|---|---|---|
| Carbon tetrachloride | 2350 | 6200 | 5082 - 7564 | NA | rats; 220 +/- 40 g | | oral; intragastric | NA | NA | (source of information not provided) | NA | Izmerov NF, Sanotsky IV, Sidorov KK. 1982. Toxicometric Parameters of Industrial Toxic Chemicals under Single Exposure. International Register of Potentially Toxic Chemicals (IRPTC). United Nations Environment Programme (UNEP). Centre of International Projects, GKNT. Moscow, Russia. |
| Carbon tetrachloride | 2350 | 7540 (4.73 mL/kg; sp. density is 1.594; convert LD50 to mg/kg) | 6631 - 8576 (95% CL) | Weil (1952) | Sprague-Dawley rats; 260-360 g; 12-16 weeks | male | oral; stomach tube | solution in 1.5 mL peanut oil; light anesthesia; doses (mL/kg)=3.6, 4.5, 5.4, 6.4 | observed for 48 hour; doses (mL/kg), dead animals: 3.6 -- 0/4; 4.5 -- 1/4; 5.4 -- 3/4; 6.4 -- 4/4 | 16 rats used | British Drug Houses Ltd, Pool, Great Britain | Pound AW, Horn L, Lawson TA. 1973. Decreased toxicity of dimethylnitrosamine in rats after treatment with carbon tetrachloride. Pathology 5:233-242. *University of Queensland, Brisbane, Australia* |
| Carbon tetrachloride | 2350 | 10054 | 8758 - 11009 (95% CI; slope = 9.2) | Finney (1971) Probit Analysis | Crl-CD rats from Charles River Breeding lab; 220-280 g; 60 days old | male | oral; intragastric intubation | 0.5 - 3.9% suspension; dissolved or suspended in corn oil; single dose; 2000, 2700, 3500, 4500, 8000, 10000, 11000, 12000, 14000, 15000, 17000 mg/kg doses | observed daily for 14 days; death within 3 days; toxic symptoms: salivation, weakness, pallor, lethargy, diarrhea, weight loss | non fasted; 11 groups of 10; 110 rats used; 49 rats died; doses of 10000 mg/kg or greater were administered in 2 portions at 15 minutes apart | 99+% pure; E.I. Du Pont de Nemours | Dashiell OL, Kennedy GL Jr. 1984. The effects of fasting on the acute oral toxicity of nine chemicals in the rat. J Appl Toxicol 4(6): 320-325. E.I. Du Pont de Nemours & Co., Newark, DE data from EPA TSCATS database; Oral LD50 test in rats with methane,tetrachloro-* with cover letter dated 081092; (1981) EPA Document No. 88-920010018 Fiche No. OTS0571676; *E.I Dupont DeNemours & Co., Inc./Haskell Labs* |
| Chloral hydrate | 479 | 285 | +/- 21 (S.E.) | NA | Charles River Sprague-Dawley rats; 1-2 days | NA | oral | NA | NA | data is from Yeary et al.1966 | NA | Goldenthal EI. 1971. A compilation of LD50 values in newborn and adult animals. Toxicology and Applied Pharamacology 18:185-207. |
| Chloral hydrate | 479 | 479 | +/- 42 (S.E.) | NA | Charles River Sprague-Dawley rats; adult | NA | oral | NA | NA | data is from Yeary et al.1966 | NA | Toxicology and Applied Pharmacology. (Academic Press, Inc., 1 E. First St., Duluth, MN 55802) V.1 1959 Goldenthal EI. 1971. A compilation of LD50 values in newborn and adult animals. Toxicology and Applied Pharamacology 18:185-207 |
| Chloral hydrate | 479 | 479 | +/- 42 (S.E.) | Miller and Tainter (1944) | Charles River CD and Sprague-Dawley rat strains; > 100 g; adult | NA | oral intubation; up to 50 mL/kg | NA | rats observed for 7 days; observed up to 14 days when heavy metals or other compounds that produce latent death were investigated | fasted overnight | NA | Yeary RA, Benish RA, Finkelstein M. 1966. Acute Toxicity of Drugs in Newborn Animals. Journal of Pediatrics 69 (4):663-667. *Dept. of Veterinary Preventive Medicine, Ohio State University, Columbus, OH* |
| Chloral hydrate | 479 | 500 | NA | NA | NA | rat | oral | aqueous solution or suspension | produced degree of CNS depression | NA | NA | Finnegan JK, Larson PS, Haag HB, Page SG Jr. 1951. March. Sedative and toxic effects of several chloral derivatives. Federation Proceedings v. 10:294. *Medical College of Virginia, Richmond, VA* |
| Chloral hydrate | 479 | 800 | NA | graphically | white rats; 125-250 g | male and female | oral;stomach tube | single dose; 4% solutions in distilled water; dose is mg/kg, rats per dose: 700-25; 800-34; 900-22; 1000-32; 1100-24 | acute toxicity same for male and female; | fasted for 16 hour; 137 rats used; first report for chloral hydrate LD50 | NA | Adams WL. 1943. The comparative toxicity if chloral alcoholate and chloral hydrate. J Pharm Exp Ther 78:340-345. *Union University, Albany, NY* |
| Chloral hydrate | 479 | 863 | 622.9 - 832.1 | Bliss-Probit method | Sprague-Dawley rats; 5 weeks | male | oral gavage | dissolved in saline; range (mg/kg) of doses 417, 583, 816, 1143, 1600 | rats observed at 6 hours after dosing and a once a day for 1 - 2 weeks; most rats found dead within 3 days; 29 of 50 rats died; toxic symptoms: sleep to coma | animals acclimated to environment for 1 week before testing; 5 groups of 10 rats each; fasted 16 hours before dosing; 100% mortality = 1600 mg/kg; 0% mortality = 417 mg/kg | Wako Pure Chemicals Co. | Kitagawa H, Saito H, Sugimoto T, Yanaura S, Kitagawa H, Hosokawa T, Sakamoto K. 1982. Effects of diiospropyl-1,3-dithiol-2-ylidene malonate (NKK-105) on acute toxicity of various drugs and heavy metals. J Toxicol Sci 7(2):123-34. *Chiba University; Hoshi College of Pharmacy; Showa University -- Japan* |
| Chloramphenicol | 2500 | 692.9 | -/+ 70 (SEM) | Bliss (1938) | Harlan rats; < 4 days; 6-9 g | NA | intragastric | cmpd suspended in 4% acacia saline solution; 2% solution doses at 400, 500, 620, 800 mg/kg | observed for 7 days; death within 24 h; 400 mg/kg-0/5, 500 mg/kg-0/5, 620 mg/kg-3/5, 800 mg/kg-3/5 | NA | NA | Worth HM, Kachman C, Anderson RC. 1963. Inartistric injection for toxicity studies with newborn rats. Toxic Appl Pharmac 5:719-727. *Eli Lilly and Company, Indianapolis, IN* |
| Chloramphenicol | 2500 | 1040 | 776 - 1394 | NA | MJ rats; 1-2 days | NA | oral | NA | NA | information from: drug applications from pharmaceutical manufacturers, the literature, and FDA labs | NA | Goldenthal EI. 1971. A compilation of LD50 values in newborn and adult animals. Toxicology and Applied Pharamacology. 18. Pp. 185 -207. *Bureau of Drugs, Food and Drug Administration, Dept. of Health, Education, and Welfare, Rockville, MD.* |
| Chloramphenicol | 2500 | 2188 | NA | Bliss (1938) | Harlan rats; 30-40 g; 21-25 days; weanling | NA | gavage | cmpd suspended in 4% acacia saline solution; 20% solution administ; 1800, 2500, 3300 mg/kg doses | observed for 7 days; death within 3 days; 1800 mg/kg-0/5, 2500 mg/kg-4/5, 3300 mg/kg-5/5 | NA | NA | Worth HM, Kachman C, Anderson RC. 1963. Inartistric injection for toxicity studies with newborn rats. Toxic Appl Pharmac 5:719-727. *Eli Lilly and Company, Indianapolis, IN* |
| Chloramphenicol | 2500 | 2500 | NA | NA | albino rats | NA | oral | NA | NA | reference paper in Italian; 1983/84 RTECS used the same reference but RC had a different LD50 and ZEBET did not provide the reference) | NA | Farmaco, Edizione Scientifica. (Casella Postale 227, 27100 Pavia, Italy) V.8-43 1953-88 ---- Almirante L, Caprio L, de Carneri I, Defranceschi A, Zamboni V. 1955. Studi sul cloroamfenicolo: (1) nuove sintesi della d-treo-2-dichlorometil-4-[(4'-nitrofenil)Ossimetil] Ossazolina (2) E dati sur potere antibiotico della stessa. Farmaco, Edizione Scientifica 10(1):3-13. **(RTECS REFERENCE)** |
| Chloramphenicol | 2500 | 3400 | 2252 - 5139 | NA | MJ rats; adult | NA | oral | NA | NA | information from: drug applications from pharmaceutical manufacturers, the literature, and FDA labs | NA | Goldenthal EI. 1971. A compilation of LD50 values in newborn and adult animals. Toxicology and Applied Pharamacology 18:185-207. *Bureau of Drugs, Food and Drug Administration, Dept. of Health, Education, and Welfare, Rockville, MD.* This value used by RC (1977 RTECS). |
| Chloramphenicol | 2500 | 5000 | NA | NA | Harlan Wistar rats | NA | oral | NA | NA | information from: drug applications from pharmaceutical manufacturers, the literature, and FDA labs | NA | Goldenthal EI. 1971. A compilation of LD50 values in newborn and adult animals. Toxicology and Applied Pharamacology 18:185-207. *Bureau of Drugs, Food and Drug Administration, Dept. of Health, Education, and Welfare, Rockville, MD.* |

**Rat and Mouse Oral LD50 Database**

| Reference Substance | Rat Oral $LD_{50}$[1] mg/kg | Rat Oral $LD_{50}$[2] mg/kg Primary Reference | $LD_{50}$[3] mg/kg (range) Primary Reference | $LD_{50}$ Calculation Method[4] Primary Reference | Animal Information (stock, weight, age) | Gender | Route and/or Method of Exposure | Dose | Observations | Notes | Reference Substance Source | Primary Reference |
|---|---|---|---|---|---|---|---|---|---|---|---|---|
| Chloramphenicol | 2500 | > 5000 | NA | Bliss (1938) method | Harlan rats; 150 g; adult | NA | gavage | cmpd suspended in 4% acacia saline solution; 30% solution dose at 5000 mg/kg | observed for either 7 or 14 days; 10 rats used; 2 dead; death on 1st day | NA | NA | Worth HM, Kachman C, Anderson RC. 1963. Inartistric injection for toxicity studies with newborn rats. Toxic Appl Pharmac 5:719-727. *Eli Lilly and Company, Indianapolis, IN* |
| Citric acid | 3000 | 3000 | NA | approximative | THOM (SPF) rats; 151-213 g; 48 days-males; 62 days-female | male and female | oral gavage | 2500 - 5000mg/kg doses; cmpd in hydroxyethylcellulose | NA | 32 male and 32 female rats; 64 rats used; performed under GLPs | NA | Schneider PM, Bauer A, Eckenfels C, Hohbach L, Lutzen H, Puschner R, Serbedija J, Wiegleb P, Lehmann H. 1992. Acute, subacute and chronic toxicity studies of pimobendan in laboratory animals. Oyo Yakuri/Pharmacometrics 43(6):561-578. **(RTECS REFERENCE)** |
| Citric acid | 3000 | 11700 | 10080 - 13570 (95% CL) | Litchfield and Wilcoxon method | SD-JCL rats; 110-140 g; 5 weeks | male | oral | 2 mL/100 g bw | observed for 7 days; stimulation within several minutes, then ataxia and prostration at 50 minutes; mydriasis, decreased heart rate and respiration; death at 12500 and 18000 mg/kg in 20-180 minutes by resp. failure; 1 rat at 10420 mg/kg died at 20 hours; autopsy showed hemorrage of gastric mucosa | 6 rats/dose; number of doses not reported | TAKEDA-citric acid (refined product produced by yeast fermention of paraffins) | Yokotani H, Usui T, Nakaguchi T, Kanabayashi T, Tanda M, Aramaki Y. 1971. Acute and subacute toxicological studies of TAKEDA-citric acid in mice and rats. J Takeda Res Lab 30(1):25-31. |
| Colchicine | NA | 5.886 (mouse) | 3.901 - 7.508 | NA | B6D2F1 (BDF1) mice | NA | Oral | in saline | NA | Mice fasted prior to dosing | NA | National Cancer Institute Screening Program Data Summary, Developmental Therapeutics Program. (Bethesda, MD 20205) JAN1986. **(RTECS REFERENCE)** |
| Colchicine | NA | 18 (mouse) | NA | Lorke (1983) | MS/Ae mice from Hitachi Medical Laboratories (Sanwa, Japan); 317-346 g; 7 weeks | male | oral | 1.0, 10.0, 14.0, 22.5, 37.5, 60.0, 100.0 mg/kg in physiological saline | Dose and Deaths: 1.0 - 0/3; 10.0 - 0/3; 14.0 - 0/1; 22.5 -1/1; 37.5 - 1/1; 60.0 - 1/1;100.0 - 3/3 | 13 mice used; acclimated for 1 week before test | Wako Pure Chemical Industries Ltd. (Osaka, Japan) | Asano N, Morita T, Watanabe Y. 1989. Micronucleus test with colchicine given by intraperitoneal injection and oral gavage. Mutat Res 223:391-394. |
| Colchicine | NA | 29 (mouse) | NA | Lorke (1983) | CD-1 mice from Charles River Japan Inc (Hino, Japan); 312-382 g; 7 weeks | male | oral | 1.0, 10.0, 14.0, 22.5, 37.5, 60.0, 100.0 mg/kg in physiological saline | Dose and Deaths: 1.0 - 0/3; 10.0 - 0/3; 14.0 - 0/1; 22.5 -0/1; 37.5 - 1/1; 60.0 - 1/1; 100.0 - 3/3 | 13 mice used; acclimated for 1 week before test | Wako Pure Chemical Industries Ltd. (Osaka, Japan) | Asano N, Morita T, Watanabe Y. 1989. Micronucleus test with colchicine given by intraperitoneal injection and oral gavage. Mutat Res 223:391-394. |
| Cupric sulfate pentahydrate | 300 | 236.2 | NA | NA | Sprague-Dawley rats | NA | oral | 200, 500, 1000, 2000 | NA | NA | T.C. copper sulfate powdered (50% in water) | U.S. EPA, Office of Pesticide Programs; Health Effects Division; Tox Oneliners; EPA Chem. Code: 024401; Core Grade/Tox Record No. 002705 |
| Cupric sulfate pentahydrate | 300 | 300 | NA | NA | rats | NA | oral | NA | NA | value assumed to be from Lehman 1951 | NA | Agricultural Chemicals. Thomson, W.T., 4 vols., Fresno, CA, Thomson Publications, 1976/77 revision **(RTECS REFERENCE)** |
| Cupric sulfate pentahydrate | 300 | 300 | NA | NA | rats | NA | oral; stomach tube | NA | violent retching, muscular spasms and collapse; onset within minutes | information from the laboratories of Division of Pharmacology, U.S. FDA.; fasted animals | NA | Lehman AJ. 1951. Chemicals in Foods: a report to the association of food and drug officials on current developments. Part II. Pesticides. Quarterly Bulletine (Association of Food and Drug Officials of the United States). v15:22 - 133. *U.S. FDA* **(RTECS SOURCE)** |
| Cupric sulfate pentahydrate | 300 | 450 | 346 - 585 (95% CL) | Litchfield and Wilcoxon method (1949) | Sprague-Dawley rats; 155-175 g | female | oral gavage | single dose; 9 dose levels from 100 - 5000mg/kg | animals observed daily and survivors killed 14 days post-dose; all deaths within first week of dosing; weight loss, lethargy and death; dose (mg/kg), no dead/no dosed: 100 - 0/5; 200 - 0/5; 300 - 3/10; 500 - 0/5; 625 - 0/10; 750 - 4/5; 5000 - 5/5 | tested under GLPs; groups of rats (5/sex/dose group) were administered vehicle (10 mL/kg) or test article; 45 animals used | powder 99% pure | Deenihan MJ.1987; Fine 20 Copper Sulfate Pentahydrate - Acute Toxicology Testing: (A) Acute Oral Toxicity. Northview Pacific laboratories, Inc. U.S. EPA, Office of Pesticide Programs; Health Effects Division; Tox Oneliners; MRID No.433962-01A; EPA Chem. Code: 024401; Core Grade/Tox Record No. acceptable; 011521; Apr. 20, 1995 |
| Cupric sulfate pentahydrate | 300 | 472.5 | NA | NA | rat | NA | oral | NA | NA | NA | copper sulfate (powder) | WARF Institute, Inc.; WARF No. 5032161; Jan. 1, 1975; U.S. EPA, Office of Pesticide Programs; Health Effects Division; Tox Oneliners; MRID No.00058839; EPA Chem. Code: 024401; Core Grade/Tox Record No. supplementary 004457 |
| Cupric sulfate pentahydrate | 300 | 790 | 416 - 1501 (95% CL) | Litchfield and Wilcoxon method (1949) | Sprague-Dawley rats; 225-250 g | male | oral gavage | single dose; 9 dose levels from 100 - 5000 mg/kg | animals observed daily and survivors killed 14 days post-dose; all deaths within first week of dosing; weight loss, lethargy and death; dose (mg/kg), no dead/no dosed: 100 - 0/5; 300 - 2/5; 750 - 1/5; 1000 - 3/5; 1250 - 2/5; 5000 - 5/5 | tested under GLPs; groups of rats (5/sex/dose group) were administered vehicle (10 ml/kg) or test article; 30 animals used | powder 99% pure | Deenihan MJ.1987; Fine 20 Copper Sulfate Pentahydrate - Acute Toxicology Testing: (A) Acute Oral Toxicity. Northview Pacific laboratories, Inc. U.S. EPA, Office of Pesticide Programs; Health Effects Division; Tox Oneliners; MRID No.433962-01A; EPA Chem. Code: 024401; Core Grade/Tox Record No. acceptable; 011521; Apr. 20, 1995 |
| Cupric sulfate pentahydrate | 300 | 960 | 710 - 1300 (these limits are +/- 1.96 S.D.) | Thompson method; Weil tables | Carworth-Wistar rats; 90-120 g; 4-5 weeks | male | oral gastric intubation | in aqueous solution; concentration intubated = 50 mg/mL; dosages arranged in a logarithmic series differing by a factor of 2 | LD50 based on mortalities during a 14 day period | non-fasted; groups of 5 rats; single oral dose toxicity | reagent grade | Smyth HF Jr, Carpenter CP, Weil CS, Pozzani UC, Striegel JA, Nycum JS. 1969. Range-finding toxicity data: List VII. Am Ind Hyg Assoc J 30:470-476. *Carnegie-Mellon University, Pittsburgh, PA* (LD50 value)<br>Smyth HF Jr, Carpenter CP, Weil CS, Pozzani UC, Striegel JA. 1962. Range-finding toxicity data: List VI. Am Ind Hyg Assoc J 23:95-107. *Mellon Institute of Industrial Research, Pittsburg, PA* (experimental parameters) |
| Cupric sulfate pentahydrate | 300 | 1570 | 1030 - 2400 | NA | rat | NA | oral | NA | NA | low purity (20%) | copper sulfate pentahydrate 20% (Odor inhibitor/bactericide) | Hazleton Laboratories America, Inc.; HLA B1100274; Feb 27, 1989; U.S. EPA, Office of Pesticide Programs; Health Effects Division; Tox Oneliners; MRID No. 41043001; EPA Chem. Code: 024401; Core Grade/Tox Record No. Guideline 009092; Feb. 5, 1992 |
| Cupric sulfate pentahydrate | 300 | 2300 | 1150 - 3390 | NA | rat | female | oral | NA | NA | low purity (11%) | copper sulfate 11% | BASF; 82/168; Aug. 11, 1986; U.S. EPA, Office of Pesticide Programs; Health Effects Division; Tox Oneliners; MRID No. 00149179; EPA Chem. Code: 024401; Core Grade/Tox Record No. Guideline 006197 |
| Cupric sulfate pentahydrate | 300 | 2530 | 2010 - 3170 | NA | rat | male and female | oral | NA | NA | low purity (11%) | copper sulfate 11% | BASF; 82/168; Aug. 11, 1986; U.S. EPA, Office of Pesticide Programs; Health Effects Division; Tox Oneliners; MRID No. 00149179; EPA Chem. Code: 024401; Core Grade/Tox Record No. Guideline 006197 |
| Cupric sulfate pentahydrate | 300 | 2610 | 1890 - 4140 | NA | rat | male | oral | NA | NA | low purity (11%) | copper sulfate 11% | BASF; 82/168; Aug. 11, 1986; U.S. EPA, Office of Pesticide Programs; Health Effects Division; Tox Oneliners; MRID No. 00149179; EPA Chem. Code: 024401; Core Grade/Tox Record No. Guideline 006197 |

**Rat and Mouse Oral LD50 Database**

| Reference Substance | Rat Oral $LD_{50}$[1] mg/kg | Rat Oral $LD_{50}$[2] mg/kg Primary Reference | $LD_{50}$[3] mg/kg (range) Primary Reference | $LD_{50}$ Calculation Method[4] Primary Reference | Animal Information (stock, weight, age) | Gender | Route and/or Method of Exposure | Dose | Observations | Notes | Reference Substance Source | Primary Reference |
|---|---|---|---|---|---|---|---|---|---|---|---|---|
| Cupric sulfate pentahydrate | 300 | > 0.5mL/kg < 2.0 mL/kg | NA | NA | Sprague-Dawley rats | male | oral | 0.5, 2.0, 5.0 mL/kg | no toxic signs | NA | Cutrine (28% copper sulfate) | WARF Institute, Inc.; WARF No. 1052198; Mar. 20, 1978; U.S. EPA, Office of Pesticide Programs; Health Effects Division; Tox Oneliners; MRID No.00157309; EPA Chem. Code: 024401; Core Grade/Tox Record No. supplementary 002707 |
| Cycloheximide | 2 | 1 (calculated by NICEATM) | NA | NA | rats | NA | oral; stomach tube | aqueous solutions or suspensions; 0.5, 0.75, 1.0, 1.5, 2.0, 2.5, 5.0, 7.5, 10, 15, 25, 50, 75, 100, 150, 200 mg/kg dose range | rats at higher doses had bloody urine and profuse watery feces | 2 rats/dose; 32 rats used; 27/32 rats dead; 75-200 mg/kg: all dead within 5 hour; 10-50 mg/kg: all dead overnight; 7.5 mg/kg: 1 dead overnight, other at 26 hour; 5.0 mg/kg: 1 dead overnight, other at 24 hour; 2.5 mg/kg: all dead at 24 and 25 hour; 2.0 mg/kg: all dead overnight and 23 hour; 1.5 mg/kg: all dead at 25 hour; 1.0 mg/kg: 1 dead at 25 hour, 1 survived; 0.5 - 0.75 mg/kg: all survived | Upjohn Company | Traub R, DeWitt JB, Welch JF, Newman DJ. 1950. Toxicity and repellency to rats of actidione. J Am Pharm Assoc (Sci. Ed.) 39(10):552 - 555. *Army Medical Department Research and Graduate School, Washington, D.C.* |
| Cycloheximide | 2 | 1.8 | NA | NA | rats | NA | oral | NA | NA | NA | NA | Compounds Available for Fundamental Research, Volume II-6, Antibiotics, A Program of Upjohn Company Research Labo (Kalamazoo, MI 49001).1971. **(RTECS REFERENCE)** |
| Cycloheximide | 2 | 2.5 | NA | NA | rats | NA | oral | NA | excessive salivation, diarrhea, nervousness, depression | NA | Upjohn Company | Ford JH, Klomparens W. 1960. Cycloheximide (Acti-dione) and its non agricultural uses. Antibiotics and Chemotherapy 10:682 - 687. *The Upjohn Co., Kalamazoo, MI* |
| Dibutyl phthalate | 7499 | 7499 | 7072 - 8006 (95% CL) | NA | rats | NA | oral | NA | NA | NA | NA | Weisheng Dulixue Zazhi. Journal of Health Toxicology. (Weisheng Dulixue Zazhi Bianjibu, Dongdaqiao, Chaoyang Menwai, Beijing, Peop. Rep. China) V.1- 1987, 1991. **(RTECS REFERENCE)** |
| Dibutyl phthalate | 7499 | 8000 | NA | NA | Sprague-Dawley rats; 60-75 g; 5-6 weeks | male | oral | single undiluted doses; 4000, 8000, 16000, 32000 mg/kg doses | 7 day observation | 4000 mg/kg - 0/3 dead; 8000 mg/kg - 4/9 dead; 16000 mg/kg - 6/6 dead; 32000 mg/kg - 6/6 dead; 24 rats used | NA | Smith CC. 1953. Toxicity of butyl stearate, dibutyl sebacate, dibutyl phthalate, and methoxyyethyl oleate. Arch Ind Hyg 7:310-318. |
| Dibutyl phthalate | 7499 | 8380 | 6860 - 10230 | NA | Sherman strain rats; 120 g | NA | NA | dosage series when expressed in /kg constitutes the antilogarithms of 1.0, 1.1, 1.2, etc | NA | NA | NA | Smyth HF, Carpenter CP. 1948. Further experience with the range finding test in the industrial toxicology laboratory. J Ind Hyg Toxicol 30:63-68. *Melon Institute, Pittsburgh, PA* |
| Dibutyl phthalate | 7499 | 12436 (11.9 mL/kg) | NA | Karber's method | white rats; 60-75 g; 6 weeks | NA | oral | NA | degenerative liver changes noted | reference is untranslated Russian with English abstract; NICEATM converted 11.9 mL/kg LD50 to mg/kg using provided density of 1.045 g/mL | NA | Homrowski S, Nikonorow M. 1959. Toksycznose ostra ftalanu dwubutylu oraz ftalanu dwu-2-etyloheksylu produkcji krajowej. Roczniki Panstwowego Zakladu Higieny 10:321-327. |
| Dichlorvos (DDVP) | 17 | 17 | NA | NA | rats | NA | oral | NA | NA | unknown primary reference | NA | Japan Pesticide Information. (Japan Plant Protection Assoc., 1-43-11, Komagome, Toshima-ku, Tokyo 170, Japan) No.1-61, 1969-92. 1972. **(RTECS REFERENCE)** |
| Dichlorvos (DDVP) | 17 | 50 | NA | Litchfield and Wilcoxon method (1949) | CFY strain rats; 120+ g; adult | female | oral | NA | NA | NA | 93% pure; Ciba-Geigy, Switzerland | Desi I. 1983. Neurotoxicological investigaton of pesticides in animal experiments. Neurobehav Toxicol 5:503-515. *National Institute of Hygiene, Hungary* |
| Dichlorvos (DDVP) | 17 | 54 (calculated from negative log in mol/kg [3.61]) | 24 - 111 (CL) | Litchfield and Wilcoxon method (1949) | Wistar rats; 150 g | female | intragastric-ally (metal tube) | ethanol: water 1:4 solution used as solvent; 2 mL/kg dosage; | observed for 72 hours; decreased body weight | 30 rats tested (5 groups of 6 rats) | 95% pure | Gajewski D, Katkiewicz M. 1981. Activity of certain enzymes and histomorphological changes in subacute intoxication of rats with selected organophosphates. Acta Physiol Pol 32(5):507-520. *Agicultural Academy (and others), Warsaw, Poland* |
| Dichlorvos (DDVP) | 17 | 56 | 48 - 65 (95% CL) | Litchfield and Wilcoxon method (1949) | Sherman strain rats; min.wt.: female = 200 g; min.age of 90 days | female | oral; stomach tube | chemical in peanut oil; 0.005 mL/g of bw | observed hourly on first day of dosage and twice a day thereafter until time of death; max survival = died within 1 hour | 80 rats tested; LD50 value from Durham et al. 1957 | technical grade | Gaines TB. 1960. The acute toxicity of pesticides to rats. Toxicol Appl Pharmacol 2:88-99. *U.S. Dept. of Health, Education, and Welfare, Savannah, GA*<br>Mattson AM, Spillane JT, Pearce GW. 1955. Dimethyl 2,2-dichlorvinyl phosphate (DDVP), an organic phosphorous compound highly toxic to insects. J Agr Food Chem 3:319-321. *Communicable Disease Center, Savannah, GA* |
| Dichlorvos (DDVP) | 17 | 56 | 48 - 65 (95% CL) | Litchfield and Wilcoxon method (1949) | Sherman albino rats | female | oral; stomach tube | dissolved in peanut oil; dosage rate of 5uL/g; DDVP concentration varied | bulging eyes, excessive lacrimation, sialorrhea, generalized muscle fasiculations, tremors; killed rats dead within 1 hour; all survivors completely recovered within 24 hours | NA | technical grade, 90%DDVP | Durham WF, Gaines TB, McCauley RH, Sedlak VA, Mattson MA, Hayes WJ. 1957. Studies on the toxicity of 0,0-dimethyl-2,2-dichlorovinyl phosphate (DDVP). AMA Arch Ind Health 15:340-349. *U.S. Dept. of Health, Education and Welfare, Savannah, GA* |
| Dichlorvos (DDVP) | 17 | 68 | 59 - 79 (95% CL) | Litchfield and Wilcoxon method (1949) | Sherman albino rats | female | oral; stomach tube | dissolved in peanut oil; dosage rate of 5uL/g; DDVP concentration varied | bulging eyes, excessive lacrimation, sialorrhea, generalized muscle fasiculations, tremors; killed rats dead within 1 hour; all survivors completely recovered within 24 hours | NA | 99% pure DDVP | Durham WF, Gaines TB, McCauley RH, Sedlak VA, Mattson MA, Hayes WJ. 1957. Studies on the toxicity of 0,0-dimethyl-2,2-dichlorovinyl phosphate (DDVP). AMA Arch Ind Health 15:340-349. *U.S. Dept. of Health, Education and Welfare, Savannah, GA* |
| Dichlorvos (DDVP) | 17 | 80 | 62 - 104 (95% CL) | Litchfield and Wilcoxon method (1949) | Sherman strain rats; min. wt.: male = 175 g; min. age of 90 days | male | oral; stomach tube | chemical in peanut oil; 0.005 mL/g of bw | observed hourly on first day of dosage and twice a day thereafter until time of death; max survival = died within 1 hour | 59 rats tested; LD50 value from reseach paper of Durham et al. 1957 | technical grade | Gaines TB. 1960. The acute toxicity of pesticides to rats. Toxicol Appl Pharmacol 2:88-99. *U.S. Dept. of Health, Education, and Welfare, Savannah, GA*<br>Mattson AM, Spillane JT, Pearce GW. 1955. Dimethyl 2,2-dichlorvinyl phosphate (DDVP), an organic phosphorous compound highly toxic to insects. J Agr Food Chem 3:319-321. *Communicable Disease Center, Savannah, GA* |
| Dichlorvos (DDVP) | 17 | 80 | NA | Litchfield and Wilcoxon method (1949) | CFY strain rats; 120+ g; adult | male | oral | NA | NA | NA | 93% pure; Ciba-Geigy, Switzerland | Desi I. 1983. Neurotoxicological investigaton of pesticides in animal experiments. Neurobehav Toxicol 5:503-515. *National Institute of Hygiene, Hungary* |

**Rat and Mouse Oral LD50 Database**

| Reference Substance | Rat Oral $LD_{50}$[1] mg/kg | Rat Oral $LD_{50}$[2] mg/kg Primary Reference | $LD_{50}$[3] mg/kg (range) Primary Reference | $LD_{50}$ Calculation Method[4] Primary Reference | Animal Information (stock, weight, age) | Gender | Route and/or Method of Exposure | Dose | Observations | Notes | Reference Substance Source | Primary Reference |
|---|---|---|---|---|---|---|---|---|---|---|---|---|
| Dichlorvos (DDVP) | 17 | 80 | 62 - 104 (95% CL) | Litchfield and Wilcoxon method (1949) | Sherman albino rats | male | oral; stomach tube | dissolved in peanut oil; dosage rate of 5 ul/g; DDVP concentration varied | bulging eyes, excessive lacrimation, sialorrhea, generalized muscle fasiculations, tremors; killed rats dead within 1 hour; all survivors completely recovered within 24 hours | NA | technical grade, 90%DDVP | Durham WF, Gaines TB, McCauley RH, Sedlak VA, Mattson MA, Hayes WJ. 1957. Studies on the toxicity of 0,0-dimethyl-2,2-dichlorovinyl phosphate (DDVP). AMA Arch Ind Health 15:340-349. *U.S. Dept. of Health, Education and Welfare, Savannah, GA* |
| Dichlorvos (DDVP) | 17 | 80 | 71 - 90 (95% CL) | Litchfield and Wilcoxon method (1949) | Sherman albino rats | female | oral; stomach tube | dissolved in peanut oil; dosage rate of 5 ul/g; DDVP concentration varied | bulging eyes, excessive lacrimation, sialorrhea, generalized muscle fasiculations, tremors; killed rats dead within 1 hour; all survivors completely recovered within 24 hours | NA | technical grade, 90%DDVP | Durham WF, Gaines TB, McCauley RH, Sedlak VA, Mattson MA, Hayes WJ. 1957. Studies on the toxicity of 0,0-dimethyl-2,2-dichlorovinyl phosphate (DDVP). AMA Arch Ind Health 15:340-349. *U.S. Dept. of Health, Education and Welfare, Savannah, GA* |
| Dichlorvos (DDVP) | 17 | 97.5 | 88.6 - 107 (95% CL; slope = 1.24 [1.15 - 1.34]) | Litchfield and Wilcoxon method (1949) | Fischer 344 rats; 7 weeks | male | oral gavage | dissolved in olive oil; 5 mL/kg dosing solution; 4 -5 dosages | 24 hour observation; anti-cholinesterase signs of salivation, fasiculation, lacrimation, tremors, irregular respiration, prostration; all deaths observed between 2 -24 hours | aclimated for 1 week before dosing; 5 - 10 animals per each dosage | 98.7% pure; Nippon Chemical Industrial Company, Ltd. | Ikeda T, Kojima T, Yoshida M, Takahashi H, Tsuda S, Shirasu Y. 1990. Pretreatment of rats with an organophosphorous insecticide, chlorfenvinphos, protects against subsequent challenge with the same compound. Fundam Appl Toxicol 14(3):560-567. *Mitsukaido Laboratories, Institute of Environmental Toxicology, Japan* |
| Diethyl phthalate | 8600 | > 5590 (reported as > 5.0 mL/kg; specific density = 1.118) | 95% CL (where possible); | Litchfield and Wilcoxon method (1949) | Wistar albino rats; 139-164 g | male and female | oral; gavage | 0.5, 1, 2, 5 mL/kg; single dose | observed at 1, 3, 6, and 24 hours after dosing; then observed daily for 14 days; 2 rats dead | 8 groups of 10 rats (5M, 5F); 80 rats used; fasted overnight | NA | data from EPA TSCATS database; ORAL LD50 TEST IN RATS OF DIETHYL PHTHALATE WITH COVER LETTER DATED 05/09/94 (SANITIZED) (1978) EPA Document No. 86-940000887S Fiche No. OTS0557297; *Consumer Product Testing, Fairfield, NJ* |
| Diethyl phthalate | 8600 | 8600 | 7840 - 9890 | NA | rats | NA | oral | NA | NA | NA | NA | Gigiena Truda i Professional'nye Zabolevaniya. Labor Hygiene and Occupational Diseases. (V/O Mezhdunarodnaya Kniga, 113095 Moscow, USSR) V.1-36; 1957-1992. 1980.<br><br>Timofeevshaia LA, Ivanova NI, Balinina ES. 1980. Toxicology of O-phthalate acid esters and hygiene reglamentation. Gigiena Truda i Professional'nye Zabolevaniya 24(3):25-27.**(RTECS REFERENCE)** |
| Diethyl phthalate | 8600 | 10100 | 8920 - 11280 | NA | rats; 220 +/- 40 g | NA | oral; intragastric | NA | NA | (source of information not provided) | NA | Izmerov NF, Sanotsky IV, Sidorov KK. 1982. Toxicometric Parameters of Industrial Toxic Chemicals under Single Exposure. International Register of Potentially Toxic Chemicals (IRPTC). United Nations Environment Programme (UNEP). Centre of International Projects, GKNT. Moscow, Russia. |
| Digoxin | 28.3 | 28.27 | 24.85 - 32.17 (limits of error [P=0.95]) | Probit method | rats; 250-310 g | male and female (equal numbers) | oral | NA | mortality rate computed 7 days after administration | 3 or 4 groups of 10; 30 - 40 rats used; fasted overnight | NA | Archives Internationales de Pharmacodynamie et de Therapie. (Heymans Institute of Pharmacology, DePintelaan 185, B-9000 Ghent, Belgium) V.4- 1898, 1966.<br><br>Georges A, Page J, Duvernay G. 1966. Cardiotonic properties of formiloxin: a semi-synthetic cardiac glycoside. Arch Int Pharmacodyn 164(1):47-55. Research Dept., A. Christianens, S.A., Brussels, Belgium **(RTECS REFERENCE)** |
| Dimethylformamide | 2800 | 1425 (1.5 mL/kg; converted to mg/kg using density = 0.950) | 855 - 2565 (95% CL; 0.9 - 2.7 mL/kg; converted to mg/kg using density = 0.950) | Litchfield and Wilcoxon method and probit analysis | Sprague-Dawley rats; 16-50 g; 14 days | male and female | oral | solvent used in undiluted form | animals observed for a week after medication | nonfasted rats; 6-12 rats of both sexes used for studies; solvent used in undiluted form | analytical grade meeting A.C.S. specifications | Kimura ET, Ebert DM, Dodge PW. 1971. Acute toxicity and limits of solvent residue for sixteen organic solvents. Toxicol Appl Pharmacol 19:699-704. *Abbott Laboratories, Chicago, IL* |
| Dimethylformamide | 2800 | > 2000 | NA | acceptable methods (e.g., Bliss, Litchfield and Wilcoxon, Weil, Thompson, etc.) | Sprague-Dawley rats | male and female | oral gavage | single dose | 14 day observation; toxicity symptoms: Ptosis, posture, respiratory effects, lethargy, abnormal gait, tremors, convulsions, prostrate coma; time to onset of signs --; duration of signs -- no signs reported; 0 rats dead (average per test) | 3 dose levels (5 male and 5 female each); 30 rats used; OECD TG401 (1981) followed for experimental procedures | NA | Vandenheuvel MJ, Clark DG, Fielder RJ, Koundakjian PP, Oliver GJA, Pelling D, Tomlinson NJ, Walker AP. 1990. Jul. The International Validation Of A Fixed-Dose Procedure As An Alternative To The Classical LD50 Test Food And Chemical Toxicology 28(7):469-482. |
| Dimethylformamide | 2800 | 2800 | NA | NA | rats | NA | oral | NA | NA | NA | NA | Druckery H, Preussmann R, Ivankovic S, Schmahl D. 1966. Organotrope carcinogene Wirkungen bei 65 verschiedenen N-Nitroso-Verbindungen an BD-Ratten. Zeitschrift fur Krebsforschung 69:103-201. **(RTECS REFERENCE)** |
| Dimethylformamide | 2800 | 3990 (4.2 mL/kg; converted to mg/kg using density = 0.950) | 2565 - 6270 (95% CL; 2.7 - 6.6 mL/kg; converted to mg/kg using density = 0.950) | Litchfield and Wilcoxon method and probit analysis | Sprague-Dawley rats; 80-160 g; young adult | male | oral | solvent used in undiluted form | animals observed for a week after medication | nonfasted rats; groups of 6 rats used for the studies; solvent used in undiluted form | analytical grade meeting A.C.S. specifications | Kimura ET, Ebert DM, Dodge PW. 1971. Acute toxicity and limits of solvent residue for sixteen organic solvents. Toxicol Appl Pharmacol 19:699-704. *Abbott Laboratories, Chicago, IL* |
| Dimethylformamide | 2800 | 5800 | +/- 1200 | NA | rats; 220 +/- 40 g | NA | oral; intragastric | NA | NA | (source of information not provided) | NA | Izmerov NF, Sanotsky IV, Sidorov KK. 1982. Toxicometric Parameters of Industrial Toxic Chemicals under Single Exposure. International Register of Potentially Toxic Chemicals (IRPTC). United Nations Environment Programme (UNEP). Centre of International Projects, GKNT. Moscow, Russia. |
| Dimethylformamide | 2800 | 6840 (7.2 mL/kg; sp. density = 0.950; convert LD50 to mg/kg) | 5700 - 8170 (95% CL; 6.0 - 8.6 mL/kg; sp. density is 0.950; convert LD50 to mg/kg) | Litchfield and Wilcoxon method and probit analysis | Sprague-Dawley rats; 300-470 g; older adult | male | oral | solvent used in undiluted form | animals observed for a week after medication | nonfasted rats; groups of 6 rats used for the studies; solvent used in undiluted form | analytical grade meeting A.C.S. specifications | Kimura ET, Ebert DM, Dodge PW. 1971. Acute toxicity and limits of solvent residue for sixteen organic solvents. Toxicol Appl Pharmacol 19:699-704. *Abbott Laboratories, Chicago, IL* |

**Rat and Mouse Oral LD50 Database**

| Reference Substance | Rat Oral $LD_{50}$[1] mg/kg | Rat Oral $LD_{50}$[2] mg/kg Primary Reference | $LD_{50}$[3] mg/kg (range) Primary Reference | $LD_{50}$ Calculation Method[4] Primary Reference | Animal Information (stock, weight, age) | Gender | Route and/or Method of Exposure | Dose | Observations | Notes | Reference Substance Source | Primary Reference |
|---|---|---|---|---|---|---|---|---|---|---|---|---|
| Dimethylformamide | 2800 | 7000 | NA | based on assumption that probit mortality vs log dose has same slope as similar chemical | Sherman rats; 90-120 g; 4-5 weeks | male | oral gastric intubation | in aqueous solution; doses (in g/kg) differ by 1 log to bracket LD50, then refine LD50 with doses in a series of antilog 1.1, 1.3, 1.5, etc | LD50 based on mortalities during a 14 day period | 6 rats/dose at doses that differ by 1 log to bracket LD50 (given 1 week apart); then refined LD50 with 10 rats/dose in a dose series of antilog 1.1, 1.3, 1.5, etc.; assumed to use materials/methods of Smyth & Carpenter (1944) except for reported changes | reagent grade | Smyth HF Jr, Carpenter CP. 1948. Further experience with the range finding test in the industrial toxicology laboratory. J Ind Hyg Toxicol 30: 63-68. **(LD50 value)**<br><br>Smyth HF Jr, Carpenter CP. 1944. The place of the range-finding test in the industrial toxicology laborotory. J Ind Hyg Toxicol 26:269-273. (most materials/methods) |
| Dimethylformamide | 2800 | 7182 (7.6 mL/kg; sp. density listed as 0.945; convert LD50 to mg/kg) | 6804 - 7655 (95% CL; 7.2 - 8.1 mL/kg; sp. density listed as 0.945; convert LD50 to mg/kg; slope=1.11) | Finney (1962) Probit Analysis | Sprague-Dawley SPF rats; 170-230 g | male and female | oral; stomach tube | diluted in 0.9% saline; 20 - 30 mL/kg dose | observed up to 7 days after administration; all deaths occurred within 24 hour | 10 animals per dose (5 male, 5 female) | pure DMF | Bartsch W, Sponer G, Dietmann K, Fuchs G. 1976. Acute toxicity of various solvents in the mouse and rat. LD50 of ethanol, diethylacetamide, dimethylformamide, dimethylsulfoxide, glycerine, N-methylpyrrolidone, polyethylene glycol 400, 1,2- propanediol and Tween 20. Arzneimittelforschung 26(8):1581-1583. |
| Diquat dibromide | 231 | 231 | NA | NA | rats | NA | oral | NA | NA | assumed to be the value from Clark & Hurst 1970 | NA | Pesticide Manual. (The British Crop Protection Council, 20 Bridport Rd., Thornton Heath CR4 7QG, UK) V.1- 1968. 1991. **(RTECS REFERENCE)** |
| Diquat dibromide | 231 | 121 | 108 - 136 (95% CL; slope = 12.2) | Litchfield and Wilcoxon method (1949) | Sherman strain rats (SPF); min. wt. = 200 g; min. age of 90 days | female | oral; stomach tube | chemical in peanut oil; 0.005 mL/g of bw | observed for at least 14 days after dosing or until recovered from signs of toxicity | 40 rats used; min. of 10 animals per group tested | technical grade | Gaines TB, Linder RE. 1986. Acute toxicity of pesticides in adult and weanling rats. Fundam Appl Toxicol 7(2):299-308. *Health Effects Research Laboratory, U.S. EPA, Research Triangle Park, NC* |
| Diquat dibromide | 231 | 147 | 138 - 155 (95% CL; slope = 22.5) | Litchfield and Wilcoxon method (1949) | Sherman strain rats (SPF); min. wt. = 175 g; min. age of 90 days | male | oral; stomach tube | chemical in peanut oil; 0.005 mL/g of bw | observed for at least 14 days after dosing or until recovered from signs of toxicity | 40 rats used; min. of 10 animals per group tested | technical grade | Gaines TB, Linder RE. 1986. Acute toxicity of pesticides in adult and weanling rats. Fundam Appl Toxicol 7(2):299-308. *Health Effects Research Laboratory, U.S. EPA, Research Triangle Park, NC* |
| Diquat dibromide | 231 | 231 (diquat ion per kg bw) | 194 - 274 (95% CL) | Thompson (1947); moving average interpolation method | Alderly Park albino rats (SPF); 180-200 g; young, mature | female | oral; stomach tube | chemical dissolved in water or physiological saline | observed for 14 days; lethargy, weight loss, respiratory difficulty | NA | 99% pure diquat dichloride or diquat dibromide | Clark DG, Hurst EW. 1970. The toxicity of diquat. Br J Ind Med Jan;27(1):51-55. *Imperial Chemical Industries Limited, Cheshire, UK* |
| Disulfoton | 2.6 | 2.3 | 1.7 - 3.1 (95% CL) | Litchfield and Wilcoxon method (1949) | Sherman strain rats; min. wt. = 200 g; min. age of 90 days | female | oral; stomach tube | chemical in peanut oil; 0.005mL/g of bw | observed hourly on first day of dosage and twice a day thereafter until time of death; max survival 3 days | 50 rats tested | technical grade | Gaines TB. 1969. Acute toxicity of pesticides. Toxicol Appl Pharmacol 14(3): 515-34. *U.S. Dept. of Health, Education, and Welfare, Atlanta, GA* |
| Disulfoton | 2.6 | 2.6 | NA | estimated by the logarithm-probability method | Sprague-Dawley rats; 175 - 225 g | female | NA | dissolved in 10% ETOH, 90% propylene glycol; strength of solutions adjusted so that less than 0.3% bw was administered to the rats | animals observed for 10 days; death or complete recovery occurred within this time; acute toxic dose symptoms typical of those produced by cholinergic organic phosphates; single doses produced effects resembling those resulting from excessive stimulation of the central nervous system, the patasympathetic nervous system and somatic motor nerves; after lethal doses death usually occurred within 48 hour | 25 rats used | Chemagro Corp., New York | Bombinski TJ, Dubois KP. 1958. Toxicity and mechanism of action of Di-syston. AMA Arch Ind Health 17:192-199. |
| Disulfoton | 2.6 | 2.6 | NA | NA | rats | female | oral | NA | NA | reference is a review article in Japanese; this LD50 value is assumed to be from Bombinski and Dubois 1958 | NA | Yakkyoku. Pharmacy. (Nanzando, 4-1-11, Yushima, Bunkyo-ku, Tokyo, Japan) V.1- 1950. 1986. (see Bombinski and Dubois [1958]) **(RTECS REFERENCE)** |
| Disulfoton | 2.6 | 3.2 | 3.0 - 3.3 (95% CL) | NA | Hindustan Antibiotics strain rats; adult | female | oral | 1 - 10 mg/kg doses; 6 different dose levels | acute 24 hour LD50 determination; percent mortality given for different timepoints within the 24 hour period; pretreatment of rats reduced mortality in some cases | overnight fasted; rats pretreated with one of the following: saline, oil, phenobarbital, 3-methyl-cholanthourene, nickel chloride, cobalt chloride, cycloheximide or ethylmorphine; reference doesn't adequately define which rats received what and if all data were used in LD50 determinations | NA | Pawar SS, Fawade MM. 1978. Alterations in the toxicity of thiodemeton due to the pretreatment of inducers, substrate, and inhibitors of mixed function oxidase system. Bull Environ Contam Toxicol 20:805-810. *Marathwada University, India* |
| Disulfoton | 2.6 | 6.8 | 5.9 - 7.8 (95% CL) | Litchfield and Wilcoxon method (1949) | Sherman strain rats; min. wt. = 175 g; min age of 90 days | male | oral; stomach tube | chemical in peanut oil; 0.005mL/g of bw | observed hourly on first day of dosage and twice a day thereafter until time of death; max survival 2 days | 69 rats tested | technical grade | Gaines TB. 1969. Acute toxicity of pesticides. Toxicol. Appl. Pharmacol. 14(3):515-34. *U.S. Dept. of Health, Education, and Welfare, Atlanta, GA* |
| Disulfoton | 2.6 | 7.2 | 7.0 - 7.3 (95% CL) | NA | Hindustan Antibiotics strain rats; adult | male | oral | 1 - 10 mg/kg doses; 6 different dose levels | acute 24 hour LD50 determination; percent mortality given for different timepoints within the 24 hour period; pretreatment of rats reduced mortality in some cases | overnight fasted; rats pretreated with one of the following: saline, oil, phenobarbital, 3-methyl-cholanthourene, nickel chloride, cobalt chloride, cycloheximide or ethylmorphine; reference doesn't define which rats received what and if all data were used in LD50 determinations | NA | Pawar SS, Fawade MM. 1978. Alterations in the toxicity of thiodemeton due to the pretreatment of inducers, substrate, and inhibitors of mixed function oxidase system. Bull Environ Contam Toxicol 20:805-810. *Marathwada University, India* |

**Rat and Mouse Oral LD50 Database**

| Reference Substance | Rat Oral $LD_{50}$[1] mg/kg | Rat Oral $LD_{50}$[2] mg/kg Primary Reference | $LD_{50}$[3] mg/kg (range) Primary Reference | $LD_{50}$ Calculation Method[4] Primary Reference | Animal Information (stock, weight, age) | Gender | Route and/or Method of Exposure | Dose | Observations | Notes | Reference Substance Source | Primary Reference |
|---|---|---|---|---|---|---|---|---|---|---|---|---|
| Disulfoton | 2.6 | 12.6 | NA | estimated by the logarithm-probability method | Sprague-Dawley rats; 175-225 g | male | NA | dissolved in 10% ETOH, 90% propylene glycol; strength of solutions adjusted so that less than 0.3% bw was administered to the rats | animals observed for 10 days; death or complete recovery occurred within this time; acute toxic dose symptoms typical of those produced by cholinergic organic phosphates; single doses produced effects resembling those resulting from excessive stimulation of the central nervous system, the patasympathetic nervous system and somatic motor nerves; after lethal doses death usually occurred within 48 hour | 39 rats used | Chemagro Corp., New York | Bombinski TJ, Dubois KP. 1958. Toxicity and mechanism of action of Di-syston. AMA Arch Ind Health 17:192-199. |
| Endosulfan | 18 | 18 | NA | NA | NA | NA | NA | NA | NA | assumed to be the values from Gaines 1969 | NA | Agricultural Research Service, USDA Information Memorandum. (Beltsville, MD 20705): 20,9,1966. (see Gaines 1969) **(RTECS REFERENCE)** |
| Endosulfan | 18 | 18 | 15 - 21 (95% CL) | Litchfield and Wilcoxon method (1949) | Sherman strain rats; min wt. = 200 g; min age of 90 days | female | oral; stomach tube | chemical in peanut oil; 0.005 mL/g of bw | observed hourly on first day of dosage and twice a day thereafter until time of death; max survival 2 days | 60 rats tested | technical grade | Gaines TB. 1969. Acute toxicity of pesticides. Toxicol Appl Pharmacol 14(3):515-34. *U.S. Dept. of Health, Education, and Welfare, Atlanta, GA* |
| Endosulfan | 18 | 43 | 41 - 46 (95% CL) | Litchfield and Wilcoxon method (1949) | Sherman strain rats; min wt. = 175 g; min age of 90 days | male | oral; stomach tube | chemical in peanut oil; 0.005 mL/g of bw | observed hourly on first day of dosage and twice a day thereafter until time of death; max survival 5 days | 70 rats tested | technical grade | Gaines TB. 1969. Acute toxicity of pesticides. Toxicol Appl Pharmacol 14(3):515-34. *U.S. Dept. of Health, Education, and Welfare, Atlanta, GA* |
| Epinephrine bitartrate | 4 (mouse - oral) | NA | +/- 1 | NA | NA | NA | NA | NA | observed for 5 days | NA | NA | Acta Pharmacologica et Toxicologica. (Copenhagen, Denmark) V.1-59, 1945-86. 1972. **(RTECS REFERENCE)** |
| Ethanol | 7060 | 6162 (7.8 mL/kg; converted to mg/kg using density of 0.790) | 4977 - 7663 (95% CL; 6.3 - 9.7 mL/kg) | Litchfield and Wilcoxon method and probit analysis | Sprague-Dawley rats; (16-50 g); 14 days | male and female | oral | solvent used in undiluted form | animals observed for a week after medication | nonfasted rats; 6-12 rats of both sexes used for studies; solvent used in undiluted form | analytical grade meeting A.C.S. specifications | Kimura ET, Ebert DM, Dodge PW. 1971. Acute toxicity and limits of solvent residue for sixteen organic solvents. Toxicol Appl Pharmacol 19:699-704. *Abbott Laboratories, Chicago, IL* |
| Ethanol | 7060 | 7060 | 6670 - 7460 (95% CL) | moving average of Weil (1952) or Litchfield and Wilcoxon method (1949) | Wistar albino rats; old adult; 11-12 months | male | oral | dose interval 1.1; ethanol concentration of 40% w/v | acute (24 hour) toxicity; respiratory failure | fasted overnight; 6 - 8 grouped of 10 rats each | NA | Wiberg GS, Trenholm HL, Coldwell BB. 1970. Increased ethanol toxicity in old rats: changes in LD50, in vivo and in vitro metabolism, and liver alcohol dehydrogenase activity. Toxicol Appl Pharmacol May 16(3):718-727. *Dept. of National Health and Welfare, Ottawa, Canada* **(RTECS REFERENCE)** |
| Ethanol | 7060 | 7400 | NA | NA | rats; 150-250 g; 70- 100 days | male (predominately) | oral | NA | observed for 6 days | 18 hour fasting before dosing | NA | Welch H, Slocum GG. 1943. Relation of length of carbon chain to the primary and functional toxicities of alcohols. J Lab Chem Med 28:1440-1445. *U.S. FDA, Washington, D.C.* |
| Ethanol | 7060 | 10600 | 10000 - 11200 (95% CL) | Litchfield and Wilcoxon method (1949) or moving average of Weil (1952) | Wistar albino rats; young adult; 100 days | male | oral | dose interval 1.1; ethanol concentration of 40% w/v | acute (24 hour) toxicity; respiratory failure | fasted overnight; 6 - 8 grouped of 10 rats each | NA | Wiberg GS, Trenholm HL, Coldwell BB. 1970. Increased ethanol toxicity in old rats: changes in LD50, in vivo and in vitro metabolism, and liver alcohol dehydrogenase activity. Toxicol. Appl. Pharmacol. May. 16(3):718-727. *Dept. of National Health and Welfare, Ottawa, Canada* |
| Ethanol | 7060 | 11290 - A 11204 - B (A = 14.31 mL/kg; B = 14.20 mL/kg; used density of 0.789 to convert to mg/kg) | NA | A: Behrens (1929) B: Bliss (1938) | rats | NA | oral | NA | NA | 40 - 90 animals used; NICEATM used value B since authors stated it was more accurate | NA | Deichmann WB, Mergard EG. 1948. Comparative evaluation of methods employed to express the degree of toxicity of a compound. J Ind Hyg Toxicol 30:373-378. *Albany Medical College, Albany, NY; University of Cincinnati, Cincinnati, OH* |
| Ethanol | 7060 | 11534 (14.6 mL/kg; used density of 0.790 to convert to mg/kg) | 10112 - 13193 (95% CL; 12.8 - 16.7 mL/kg) | Litchfield and Wilcoxon method and probit analysis | Sprague-Dawley rats; 300-470 g; older adult | male | oral | solvent used in undiluted form | animals observed for a week after medication | nonfasted rats; groups of 6 rats used for the studies; solvent used in undiluted form | analytical grade meeting A.C.S. specifications | Kimura ET, Ebert DM, Dodge PW. 1971. Acute toxicity and limits of solvent residue for sixteen organic solvents. Toxicol Appl Pharmacol 19:699-704. *Abbott Laboratories, Chicago, IL* |
| Ethanol | 7060 | 13660 | 11170 - 16710 (95% probability; +/- 1.96 S.D.; slope = 4.57) | probits (Bliss) | Wistar albino rats; 90-120 g | male | oral; stomach tube; single doses | 50% concentration in water; largest dose given was 50 g/kg | most deaths occurred in 2 days; all deaths occurred in 14 days | groups of 10 animals; 10 animals per dose | purified commercial grade | Smyth HF Jr, Seaton J, Fischer, L. 1941. The single dose toxicity of some glycols and derivatives. J Ind Hyg Toxicol 23:259-268. *Mellon Institute, Pittsburgh, PA* (This was the value used by the RC [from 1977 RTECS]). |
| Ethanol | 7060 | 15543 (19.7 mL/kg; used density of 0.789 to convert to mg/kg) | | Thompson method; Weil tables | Carworth-Wistar rats; 90-120 g; 4-5 weeks | male | oral gastric intubation | in aqueous solution; concentration intubated = 10 mg/mL; dosages arranged in a logarithmic series differing by a factor of 2 | LD50 based on mortalities during a 14 day period | non-fasted; groups of 5 rats; single oral dose toxicity | reagent grade | Smyth HF, Weil CS, West JS, Carpenter CP. 1970. An exploration of joint toxic action:II. Equitoxic versus equivolume mixtures. Toxicol Appl Pharmacol 17:498-503. (LD50 value)<br><br>Smyth HF Jr., Carpenter CP., Weil CS., Pozzani, UC., Striegel, JA. And Nycum, JS. 1969. Range-finding toxicity data: List VII. Am Ind Hyg Assoc J 30:470-476. *Carnegie-Mellon University, Pittsburgh, PA*<br><br>Smyth HF Jr., Carpenter CP., Weil CS., Pozzani, UC., and Striegel, JA. 1962. Range-finding toxicity data: List VI. Am Ind Hyg Assoc J 23:95-107. *Mellon Institute of Industrial Research, Pittsburg, PA* (experimental parameters) |

**Rat and Mouse Oral LD50 Database**

| Reference Substance | Rat Oral $LD_{50}$[1] mg/kg | Rat Oral $LD_{50}$[2] mg/kg Primary Reference | $LD_{50}$[3] mg/kg (range) Primary Reference | $LD_{50}$ Calculation Method[4] Primary Reference | Animal Information (stock, weight, age) | Gender | Route and/or Method of Exposure | Dose | Observations | Notes | Reference Substance Source | Primary Reference |
|---|---|---|---|---|---|---|---|---|---|---|---|---|
| Ethanol | 7060 | 17775 (22.5 mL/kg; used density of 0.790 to convert to mg/kg) | 14852 - 21330 (95% CL; 18.8 - 27.0 mL/kg) | Litchfield and Wilcoxon method and probit analysis | Sprague-Dawley rats; 80-160 g); young adult | male | oral | solvent used in undiluted form | animals observed for a week after medication | nonfasted rats; groups of 6 rats used for the studies; solvent used in undiluted form | analytical grade meeting A.C.S. specifications | Kimura ET, Ebert DM, Dodge PW. 1971. Acute toxicity and limits of solvent residue for sixteen organic solvents. Toxicol Appl Pharmacol 19:699-704. *Abbott Laboratories, Chicago, IL* |
| Ethylene glycol | 4700 | 4000 | 3100 - 5200 (95% CI; slope = 258) | Litchfield and Wilcoxon method | Fischer 344 (COB CD F/Crl BR) rats; 150-200 g; 12-14 weeks | female | oral intubation | 0.1 log dosages with 5 rats per level | animals observed for mortality daily for 14 days | fasted overnight; no dosage exceeded 24 g/kg bw; LD50 and 95% confidence limits calculated at 24 hour post-treatment; no deaths beyond 72 hour post-treatment | Aldrich Chemical Co.; high purity; > 99% ethylene glycol | Clark CR, Marshall TC, Merickel BS, et al. 1979. Toxicological assessment of heat transfer fluids proposed for use in solar energy applications. Toxicol Appl Pharmacol 5(1):529-535. *Inhalation Toxicology Research Institute, Lovelace Biomedical and Environmental research Institute, Alburquerque, NM* |
| Ethylene glycol | 4700 | 4700 | NA | | rats | NA | oral | NA | NA | reference in intranslated Russian; same reference was cited in 1983/84 RTECs, but this is not the LD50 used by RC (ZEBET did not provide the reference) | NA | Filatova VS, Smirkova ES. 1982. Derivation of the maximum permissable concentration of ethylen glycol in the air of worksites. Gigiena Truda i Professional'nye Zabolevaniya. 26(6):28-30. **(RTECS REFERENCE)** |
| Ethylene glycol | 4700 | >5000 | NA | NA | Holzman Sprague-Dawley rats | male | oral gavage | 50 mg/kg, 500 mg/kg, and 5000 mg/kg in corn oil | clinical observations included depression, labored breathing, emaciation, and alopecia | 3 groups of 10 males; no mortalities were observed | NA | from EPA TSCATS database; Acute Toxicity Study in Rats Administered 10 Materials (final report) with Cover Letter dated 062669, (1969), EPA Doc. No. 40-6942188, Fiche No. OTS0519234; *FMC Corporation* |
| Ethylene glycol | 4700 | 5890 (5.28 cc/kg; converted to mg/kg using density of 1.1155) | 5053 - 7106 (95% probability; 4.53 - 6.37 cc/kg) | probits (Bliss) | rats from the same strain; 275 +/- 25 g; 3 months +/- 9 days | NA | oral; stomach tube; single doses | single doses; 3904 mg/kg--7028 mg/kg; log doses 0.544, 0.608, 0.672, 0.735, 0.799; diluted 1 + 3 | most deaths occurred in 1 - 5 days; weakness and lack of muscular coordination; no deaths per dose: 3904 mg/kg -- 2/11; 4440 mg/kg -- 3/11; 5243 mg/kg -- 3/11; 6057 mg/kg -- 5/11; 7028 mg/kg -- 8/11 | 5 doses for 11 animals each dose; 55 rats used | NA | Laug EP, Calvery HO, Morris HJ, Woodard G. 1939. The toxicology of some glycols and derivatives. J Ind Hyg Toxicol 21:173-201. *Division of Pharmacology, Food and Drug Administration, U.S. Dept. of Agriculture, Washington, D.C.* |
| Ethylene glycol | 4700 | 6135 (5.50 cc/kg; converted to mg/kg using density of 1.1155) | 5578 - 6749 (95% probability; 5.00 - 6.05 cc/kg) | probits (Bliss) | rats from different sources; 175-325 g | male and female (~ equal) | oral; stomach tube; single doses | single doses; 3904 mg/kg -- 8366 mg/kg | most deaths occurred in 1 - 5 days; weakness and lack of muscular coordination; no deaths per dose: 3904 mg/kg - 0/7; 4462 mg/kg - 4/20; 5020 mg/kg - 3/10; 5578 mg/kg - 11/20; 6135 mg/kg - 15/20; 6693 mg/kg - 4/10; 6972 mg/kg - 7/10; 7251 mg/kg - 2/10; 7809 mg/kg - 13/20; 8366 mg/kg - 17/20 | rats fasted for about 18 hours; 147 rats used; 76 died | NA | Laug EP, Calvery HO, Morris HJ, Woodard G. 1939. The toxicology of some glycols and derivatives. J Ind Hyg Toxicol 21:173-201. *Division of Pharmacology, Food and Drug Administration, U.S. Dept. of Agriculture, Washington, D.C.* |
| Ethylene glycol | 4700 | 6500 | NA | Thompson (1947) and Weil (1952); moving average tables | Manor farms Wistar rats; 150-200 g | male | oral; stomach intubation; | single dose; geometric factor between dosage levels=2; undiluted | 14 day observation | 5 rats per dosage level; fasted overnight | NA | Weil CS, Wright GJ. 1967. Intra- and Interlaboratory Comparative Evaluation of Single Oral Test. Toxicology and Applied Pharmacology 11:378-388. *Mellon Institute, Pittsburgh, PA and The Dow Chemical Company, Midland, MI* |
| Ethylene glycol | 4700 | 6537 (5.86 cc/kg; converted to mg/kg using density of 1.1155) | 5064 - 8455 (95% probability; 4.54 - 7.58 cc/kg) | probits (Bliss) | rats from the same strain; 275 +/- 25 g; 3 months +/- 9 days | | oral; stomach tube; single doses | single doses; 3904 mg/kg -- 7028 mg/kg; log doses 0.544, 0.608, 0.672, 0.735, 0.799; undiluted | most deaths occurred in 1 - 5 days; weakness and lack of muscular coordination; no deaths per dose: 3904 mg/kg -- 2/11; 4440 mg/kg -- 2/11; 5243 mg/kg -- 4/11; 6057 mg/kg -- 5/11; 7028 mg/kg -- 6/11 | 5 doses for 11 animals each dose; 55 rats used | NA | Laug EP, Calvery HO, Morris HJ, Woodard G. 1939. The toxicology of some glycols and derivatives. J Ind Hyg Toxicol 21:173-201. *Division of Pharmacology, Food and Drug Administration, U.s. Dept. of Agriculture, Washington, D.C.* |
| Ethylene glycol | 4700 | 6860 | NA | Thompson (1947) and Weil (1952); moving average tables | Manor farms Wistar rats; 150-200 g | male | oral; stomach intubation | single dose; geometric factor between dosage levels = 2; undiluted | 14 day observation | 5 rats per dosage level; fasted overnight | NA | Weil CS, Wright GJ. 1967. Intra- and Interlaboratory Comparative Evaluation of Single Oral Test. Toxicology and Applied Pharmacology 11:378-388. *Mellon Institute, Pittsburgh, PA and The Dow Chemical Company, Midland, MI* |
| Ethylene glycol | 4700 | 7460 | NA | Thompson (1947) and Weil (1952); moving average tables | Manor farms Wistar rats; 150-200 g | male | oral; stomach intubation | single dose; geometric factor between dosage levels = 2; undiluted | 14 day observation | 5 rats per dosage level; fasted overnight | NA | Weil CS, Wright GJ. 1967. Intra- and Interlaboratory Comparative Evaluation of Single Oral Test. Toxicology and Applied Pharmacology 11:378-388. *Mellon Institute, Pittsburgh, PA and The Dow Chemical Company, Midland, MI* |
| Ethylene glycol | 4700 | 7887 (7.07 mL/kg; converted to mg/kg using density of 1.1155) | NA | Thompson method; Weil tables | Carworth-Wistar rats; 90-120 g; 4-5 weeks | male | oral gastric intubation | in aqueous solution; concentration intubated = 10 mg/mL; dosages arranged in a logarithmic series differing by a factor of 2 | LD50 based on mortalities during a 14 day period | non-fasted; groups of 5 rats; single oral dose toxicity | reagent grade | Smyth HF, Weil CS, West JS, Carpenter CP. 1970. An exploration of joint toxic action:II. Equitoxic versus equivolume mixtures. Toxicol Appl Pharmacol 17:498-503. (LD50 value)<br><br>Smyth HF Jr., Carpenter CP., Weil CS., Pozzani, UC., Striegel, JA. And Nycum, JS. 1969. Range-finding toxicity data: List VII. Am Ind Hyg Assoc J 30:470-476. *Carnegie-Mellon University, Pittsburgh, PA*<br><br>Smyth HF Jr., Carpenter CP., Weil CS., Pozzani, UC., and Striegel, JA. 1962. Range-finding toxicity data: List VI. Am Ind Hyg Assoc J 23:95-107. *Mellon Institute of Industrial Research, Pittsburg, PA* (experimental parameters) |
| Ethylene glycol | 4700 | 8000 | NA | Thompson (1947) and Weil (1952); moving average tables | Manor farms Wistar rats; 150-200 g | male | oral; stomach intubation | single dose; geometric factor between dosage levels = 2; undiluted | 14 day observation | 5 rats per dosage level; fasted overnight | NA | Weil CS, Wright GJ. 1967. Intra- and Interlaboratory Comparative Evaluation of Single Oral Test. Toxicology and Applied Pharmacology 11:378-388. *Mellon Institute, Pittsburgh, PA and The Dow Chemical Company, Midland, MI* |

**Rat and Mouse Oral LD50 Database**

| Reference Substance | Rat Oral $LD_{50}$[1] mg/kg | Rat Oral $LD_{50}$[2] mg/kg Primary Reference | $LD_{50}$[3] mg/kg (range) Primary Reference | $LD_{50}$ Calculation Method[4] Primary Reference | Animal Information (stock, weight, age) | Gender | Route and/or Method of Exposure | Dose | Observations | Notes | Reference Substance Source | Primary Reference |
|---|---|---|---|---|---|---|---|---|---|---|---|---|
| Ethylene glycol | 4700 | 8120 | NA | Thompson (1947) and Weil (1952); moving average tables | Manor farms Wistar rats; 150-200 g | male | oral; stomach intubation | single dose; geometric factor between dosage levels = 2; undiluted | 14 day observation | 5 rats per dosage level; fasted overnight | NA | Weil CS, Wright GJ. 1967. Intra- and Interlaboratory Comparative Evaluation of Single Oral Test. Toxicology and Applied Pharmacology 11:378-388. *Mellon Institute, Pittsburgh, PA and The Dow Chemical Company, Midland, MI* |
| Ethylene glycol | 4700 | 8480 | NA | Thompson (1947) and Weil (1952); moving average tables | Manor farms Wistar rats; 150-200 g | male | oral; stomach intubation | single dose; geometric factor between dosage levels = 2; undiluted | 14 day observation | 5 rats per dosage level; fasted overnight | NA | Weil CS, Wright GJ. 1967. Intra- and Interlaboratory Comparative Evaluation of Single Oral Test. Toxicology and Applied Pharmacology 11:378-388. *Mellon Institute, Pittsburgh, PA and The Dow Chemical Company, Midland, MI* |
| Ethylene glycol | 4700 | 8540 | 7310 - 9990 (95% probability; +/- 1.96 S.D.; slope = 5.71) | probits (Bliss) | Wistar albino rats; 90-120 g | male | oral; stomach tube; single doses | 50% concentration in water; largest dose given was 50 g/kg | most deaths occurred in 2 days; all deaths occurred in 14 days | groups of 10 animals; 10 animals per dose | commercial grade | Smyth HF Jr, Seaton J, Fischer L. 1941. The single dose toxicity of some glycols and derivatives. J Ind Hyg Toxicol 23:259-268. *Mellon Institute, Pittsburgh, PA.* (This is the value used by the RC [from 1981/82 RTECS]). |
| Ethylene glycol | 4700 | 9058 (8.12 mL/kg; converted to mg/kg using density of 1.1155) | NA | Thompson method; Weil tables | Carworth-Wistar rats; 90-120 g; 4-5 weeks | male | oral gastric intubation | in aqueous solution; concentration intubated = 10 mg/mL; dosages arranged in a logarithmic series differing by a factor of 2 | LD50 based on mortalities during a 14 day period | non-fasted; groups of 5 rats; single oral dose toxicity | reagent grade | Smyth HF, Weil CS, West JS, Carpenter CP. 1970. An exploration of joint toxic action:II. Equitoxic versus equivolume mixtures. Toxicol Appl Pharmacol 17:498-503. (LD50 value)<br><br>Smyth HF Jr., Carpenter CP., Weil CS., Pozzani, UC., Striegel, JA. And Nycum, JS. 1969. Range-finding toxicity data: List VII. Am Ind Hyg Assoc J 30:470-476. *Carnegie-Mellon University, Pittsburgh, PA*<br><br>Smyth HF Jr., Carpenter CP., Weil CS., Pozzani, UC., and Striegel, JA. 1962. Range-finding toxicity data: List VI. Am Ind Hyg Assoc J 23:95-107. *Mellon Institute of Industrial Research, Pittsburg, PA* (experimental parameters) |
| Ethylene glycol | 4700 | 9850 | NA | Thompson (1947) and Weil (1952); moving average tables | Manor farms Wistar rats; 150-200 g | male | oral; stomach intubation | single dose; geometric factor between dosage levels = 2; undiluted | 14 day observation | 5 rats per dosage level; fasted overnight | NA | Weil CS, Wright GJ. 1967. Intra- and Interlaboratory Comparative Evaluation of Single Oral Test. Toxicology and Applied Pharmacology 11:378-388. *Mellon Institute, Pittsburgh, PA and The Dow Chemical Company, Midland, MI* |
| Ethylene glycol | 4700 | 9900 | NA | Thompson (1947) and Weil (1952); moving average tables | Manor farms Wistar rats (SPF); 150-200 g | male | oral; stomach intubation | single dose; geometric factor between dosage levels = 2; undiluted | 14 day observation | 5 rats per dosage level; fasted overnight | NA | Weil CS, Wright GJ. 1967. Intra- and Interlaboratory Comparative Evaluation of Single Oral Test. Toxicology and Applied Pharmacology 11:378-388. *Mellon Institute, Pittsburgh, PA and The Dow Chemical Company, Midland, MI* |
| Ethylene glycol | 4700 | > 10000 | NA | NA | Sprague-Dawley rats | female | oral; gavage | single dose; 1250, 2500, 5000, 10000 mg/kg doses | 14 day observation; no rats died | ethylene glycol engine coolant; test material is 50/50 (vol.) ethylene glycol and water mix with 1.5 oz./gal of DCA inhibitor | NA | from EPA TSCATS database; Initial Submission: Acute Toxicological Properties & Handling Hazards With Ethylene Glycol Tested In Rats (Final Report) With Cover Letter Dated 051492; EPA Doc. No. 88-920003189 Fiche No.OTS0539777. *The Dow Chemical Co.* |
| Ethylene glycol | 4700 | 17800 | NA | Litchfield and Wilcoxon method | Holzman Sprague-Dawley rats; 243- 274 g | male | oral intubation | 316 mg/kg, 1000 mg/kg, 3160 mg/kg, 10000 mg/kg, 31600 mg/kg in corn oil | clinical observations included depression, rapid respiration and hunching; 2 rats dead at highest dose | 5 groups of 2 males; only mortalities were both rats at the 31600 mg/kg dose; fasted overnight | NA | from EPA TSCATS database; Acute Toxicity Study in Rats Administered One of 10 Materials (final report) with Cover Letter dated 090869, (1969), EPA Doc. No. 40-6942189, Fiche No. OTS0519235. *FMC Corporation* |
| Fenpropathrin | 18 | 18 - 24 | NA | NA | Charles River (?) rats | female | oral | 5% solution in DMSO | mortalities recorded 10 days after dosing | 15 male, 15 female rats used; 30 total rats; rats injected with 0.9% saline i.p. (1 mL/kg) 2 hour before dosing | NA | Crawford MJ, Hutson DH. 1977. The metabolism of the pyrthroid insecticide (+/-)-a-cyano-3-phenoxybenzyl 2,2,3,3-tetramethyl-cyclopropanecarboxylate, WL 41706, in the rat. Pestic Sci 8:579-599. *Shell Research Limited, Kent, UK* **(RTECS REFERENCE)** |
| Fenpropathrin | 18 | 24 - 36 | NA | NA | Charles River (?) rats | male | oral | 5% solution in DMSO | mortalities recorded 10 days after dosing | 15 male, 15 female rats used; 30 total rats; rats injected with 0.9% saline i.p. (1 mL/kg) 2 hour before dosing | NA | Crawford MJ, Hutson DH. 1977. The metabolism of the pyrthroid insecticide (+/-)-a-cyano-3-phenoxybenzyl 2,2,3,3-tetramethyl-cyclopropanecarboxylate, WL 41706, in the rat. Pestic Sci 8:579-599. *Shell Research Limited, Kent, UK* |
| Fenpropathrin | 18 | 24 - 36 | NA | NA | Charles River (?) rats | female | oral | 5% solution in DMSO | mortalities recorded 10 days after dosing | 12 male, 12 female rats used; 24 total rats; rats pretreated with corn oil 18 hour before dosing | NA | Crawford MJ, Hutson DH. 1977. The metabolism of the pyrthroid insecticide (+/-)-a-cyano-3-phenoxybenzyl 2,2,3,3-tetramethyl-cyclopropanecarboxylate, WL 41706, in the rat. Pestic Sci 8:579-599. *Shell Research Limited, Kent, UK* |
| Fenpropathrin | 18 | 24 - 36 | NA | NA | Charles River (?) rats | male | oral | 5% solution in DMSO | mortalities recorded 10 days after dosing | 12 male, 12 female rats used; 24 total rats; rats pretreated with corn oil 18 hour before dosing | NA | Crawford MJ, Hutson DH. 1977. The metabolism of the pyrthroid insecticide (+/-)-a-cyano-3-phenoxybenzyl 2,2,3,3-tetramethyl-cyclopropanecarboxylate, WL 41706, in the rat. Pestic Sci 8:579-599. *Shell Research Limited, Kent, UK* |
| Fenpropathrin | 18 | 48.5 | 37.6 - 62.6 (CL) | NA | rats | female | oral gavage | single doses (mg/kg): 15, 20, 30, 50, 59, 77, 100, 120, 169; doses in corn oil | observed for 14 days; decrease of spontaneous motor activity, hypersensitivity, fibrillation, tremor, clonic convulsion, salivation, lacrimation, incontinence, hind limb ataxia; deaths resulted within 24 hour and signs of intoxication dissapeared in 24 - 48 hour; min. toxic dose was 20 mg/kg | 8 groups of 10 rats; 80 rats used | Fenpropathrin 97% (S-3206 lot. No. 022018) | Sumitomo Chemical Co., Japan; FT-50-0018; Jan. 1, 1979; U.S. EPA, Office of Pesticide Programs; Health Effects Division; Tox Oneliners; MRID No. 00127343; EPA Chem. Code: 127901; Core Grade/Tox Record No. minimum 004567; EPA Accession No. 249937 |
| Fenpropathrin | 18 | 49 | NA | NA | rats | female | oral | NA | NA | assumed to be same LD50 value as Sumitomo 1979 | NA | Fujita Y. 1981. Meothrin (Fenpropathrin). Japan Plant Protection Assoc. Japan Pesticide Information 38:21 -25. |
| Fenpropathrin | 18 | 54 | 43.5 - 67.0 (CL) | NA | rats | male | oral gavage | single doses (mg/kg): 15, 20, 30, 50, 59, 77, 100, 120, 169; doses in corn oil | observed for 14 days; decrease of spontaneous motor activity, hypersensitivity, fibrillation, tremor, clonic convulsion, salivation, lacrimation, incontinence, hind limb ataxia; deaths resulted within 24 hour and signs of intoxication dissapeared in 24 - 48 hour; min. toxic dose was 20 mg/kg | 9 groups of 10 rats; 90 rats used | Fenpropathrin 97% (S-3206 lot. No. 022018) | Sumitomo Chemical Co., Japan; FT-50-0018; Jan. 1, 1979; U.S. EPA, Office of Pesticide Programs; Health Effects Division; Tox Oneliners; MRID No. 00127343; EPA Chem. Code: 127901; Core Grade/Tox Record No. minimum 004567; EPA Accession No. 249937 |
| Fenpropathrin | 18 | 54 | NA | NA | rats | male | oral | NA | NA | assumed to be same LD50 value as Sumitomo 1979 | NA | Fujita Y. 1981. Meothrin (Fenpropathrin). Japan Plant Protection Assoc. Japan Pesticide Information 38:21-25. |

**Rat and Mouse Oral LD50 Database**

| Reference Substance | Rat Oral $LD_{50}$[1] mg/kg | Rat Oral $LD_{50}$[2] mg/kg Primary Reference | $LD_{50}$[3] mg/kg (range) Primary Reference | $LD_{50}$ Calculation Method[4] Primary Reference | Animal Information (stock, weight, age) | Gender | Route and/or Method of Exposure | Dose | Observations | Notes | Reference Substance Source | Primary Reference |
|---|---|---|---|---|---|---|---|---|---|---|---|---|
| Fenpropathrin | 18 | 66.7 | 50.6 - 87.9 (CL) | NA | Sprague Dawley rats | female | oral gavage | single doses (mg/kg): 0, 10, 25, 50, 60, 72, 86, 104, 125; doses in corn oil | observed for 14 days; signs of intoxication with doses 25 mg/kg and above; muscular fibrillation, soft feces, diarrhea, tremor, decreased spontaneous activity, ataxia, limb paralysis, irregular respiration, slight salivation, urinary incontinence; signs developed an hour after dosing but rats recovered after 3 days; deaths resulted on day of dosing or day after dosing | rats fasted 20 hour before dosing; 9 groups of 10 rats; 90 rats used | Fenpropathrin 91.8% (S-3206 technical grade, lot. No. 2TC019) | Sumitomo Chemical Co., Japan; FT-30-0081; Jan. 17, 1983; U.S. EPA, Office of Pesticide Programs; Health Effects Division; Tox Oneliners; MRID No. 00127342; EPA Chem. Code: 127901; Core Grade/Tox Record No. guideline 004567; EPA Accession No. 249937 |
| Fenpropathrin | 18 | 70.6 | 53.7 - 92.7 (CL) | NA | Sprague Dawley rats | male | oral gavage | single doses (mg/kg): 0, 10, 25, 50, 60, 72, 86, 104, 125; doses in corn oil | observed for 14 days; signs of intoxication with doses 25 mg/kg and above; muscular fibrillation, soft feces, diarrhea, tremor, decreased spontaneous activity, ataxia, limb paralysis, irregular respiration, slight salivation, urinary incontinence; signs developed an hour after dosing but rats recovered after 3 days; deaths resulted on day of dosing or day after dosing | rats fasted 20 hour before dosing; 9 groups of 10 rats; 90 rats used | Fenpropathrin 91.8% (S-3206 technical grade, lot. No. 2TC019) | Sumitomo Chemical Co., Japan; FT-30-0081; Jan. 17, 1983; U.S. EPA, Office of Pesticide Programs; Health Effects Division; Tox Oneliners; MRID No. 00127342; EPA Chem. Code: 127901; Core Grade/Tox Record No. guideline 004567; EPA Accession No. 249937 |
| Fenpropathrin | 18 | 71.6 | 56.1 - 92.0 | NA | rats | female | oral | NA | NA | NA | Danitol S-3206 (2.4 lb/GEC) | International Reseach & Development Corp.; 491-003; FT-11-0052; Oct. 26, 1981; U.S. EPA, Office of Pesticide Programs; Health Effects Division; Tox Oneliners; MRID No. 00128341; EPA Chem. Code: 127901; Core Grade/Tox Record No. guideline 003814 |
| Fenpropathrin | 18 | 72.1 | 53.0 - 82.5 | NA | rats | male and female | oral | NA | NA | NA | Danitol S-3206 (2.4 lb/GEC) | International Reseach & Development Corp.; 491-003; FT-11-0052; Oct. 26, 1981; U.S. EPA, Office of Pesticide Programs; Health Effects Division; Tox Oneliners; MRID No. 00128341; EPA Chem. Code: 127901; Core Grade/Tox Record No. guideline 003814 |
| Fenpropathrin | 18 | 72.4 | 62.1 - 84.3 | NA | rats | male | oral | NA | NA | NA | Danitol S-3206 (2.4 lb/GEC) | International Reseach & Development Corp.; 491-003; FT-11-0052; Oct. 26, 1981; U.S. EPA, Office of Pesticide Programs; Health Effects Division; Tox Oneliners; MRID No. 00128341; EPA Chem. Code: 127901; Core Grade/Tox Record No. guideline 003814 |
| Fenpropathrin | 18 | 107 | 69.8 - 164 (CL) | NA | Sprague Dawley rats | female | oral gavage | single doses (mg/kg): 0, 25, 50, 90, 120, 160, 220, 300 | observed for 14 days; toxic signs noted at 50 mg/kg and above; muscular fibrillation, tremor, ataxia, limb paralysis, irregular respiration, lacrimation, salivation, urinary incontinence, diarrhea | 8 groups of 10 rats; 80 rats used | Fenpropathrin 97.3% (S-3206 lot. No. T-1) | Sumitomo Chemical Co., Japan; FT-20-0076; Sept. 12, 1982; U.S. EPA, Office of Pesticide Programs; Health Effects Division; Tox Oneliners; MRID No. 00127344; EPA Chem. Code: 127901; Core Grade/Tox Record No. guideline 004567; EPA Accession No. 249937 |
| Fenpropathrin | 18 | 164 | 115 - 234 (CL) | NA | Sprague Dawley rats | male | oral gavage | single doses (mg/kg): 0, 25, 50, 90, 120, 160, 220, 300 | observed for 14 days; toxic signs noted at 50 mg/kg and above; muscular fibrillation, tremor, ataxia, limb paralysis, irregular respiration, lacrimation, salivation, urinary incontinence, diarrhea | 8 groups of 10 rats; 80 rats used | Fenpropathrin 97.3% (S-3206 lot. No. T-1) | Sumitomo Chemical Co., Japan; FT-20-0076; Sept. 12, 1982; U.S. EPA, Office of Pesticide Programs; Health Effects Division; Tox Oneliners; MRID No. 00127344; EPA Chem. Code: 127901; Core Grade/Tox Record No. guideline 004567; EPA Accession No. 249937 |
| Gibberellic acid | 6300 | > 5000 | NA | NA | rats | male and female | oral | NA | NA | NA | Gibberellins Tech. GA47A, 90% | Hazleton Laboratories, Inc.; HLA 80602323; Aug. 29, 1988; U.S. EPA, Office of Pesticide Programs; Health Effects Division; Tox Oneliners; MRID No. 40873201; EPA Chem. Code: 043801; Core Grade/Tox Record No. Guideline 007756; FEB. 9, 1990 |
| Gibberellic acid | 6300 | > 5000 | NA | NA | rats | female | oral | NA | NA | NA | Pro Gibb 4% (gibberellic acid); Lot 28-T80-CF | Abbott Research Center; TA89-363; Feb. 20, 1990; U.S. EPA, Office of Pesticide Programs; Health Effects Division; Tox Oneliners; MRID No.41558201; EPA Chem. Code: 043801; Core Grade/Tox Record No. Guideline 008645; Oct. 8, 1991 |
| Gibberellic acid | 6300 | > 5000 | NA | NA | rats | NA | oral | 5000 mg/mL | NA | NA | cytokinin (as kinetin) 0.012%; Gibberellic acid 0.0007% | University of Utah Reearch Institute 03-80; TR 05-485-002A; Jan. 20, 1984; U.S. EPA, Office of Pesticide Programs; Health Effects Division; Tox Oneliners; MRID No. 00142864; EPA Chem. Code: 043801; Core Grade/Tox Record No. Guideline 006198 |
| Gibberellic acid | 6300 | > 5000 | NA | NA | rats | NA | oral | NA | NA | NA | Pro Gibb (gibberellic acid 10%); | Ricerca, Inc.; 90-0138; May 31, 1990; U.S. EPA, Office of Pesticide Programs; Health Effects Division; Tox Oneliners; MRID No. 41560401; EPA Chem. Code: 043801; Core Grade/Tox Record No. supplementary 008876; Dec. 5, 1991 |
| Gibberellic acid | 6300 | > 5000 | NA | NA | rats | male and female | oral | NA | NA | NA | Gibberellic acid 7.5% a.i. | Ricerca, Inc.; 90-0138; May 31, 1990; U.S. EPA, Office of Pesticide Programs; Health Effects Division; Tox Oneliners; MRID No. 41591103; EPA Chem. Code: 043801; Core Grade/Tox Record No. Guideline 008571; Sept. 11, 1991 |
| Gibberellic acid | 6300 | > 5000 | NA | NA | Charles River Crl CD; 271-293 g; young adult | male | oral | 5000 mg/mL in corn oil; 10 mL/kg dose; | 14 day observation; 0/5 animals dead; dyspnea | 5 animals used; tan to white powder | Gibberellins Tech., 88.0% | Hazleton Laboratories, Inc.; HLA 90305639; June 22, 1989; U.S. EPA, Office of Pesticide Programs; Health Effects Division; Tox Oneliners; MRID No. 41605801; EPA Chem. Code: 043801; Core Grade/Tox Record No. Guideline 008916; Dec. 17, 1991 |
| Gibberellic acid | 6300 | > 5000 | NA | NA | Charles River Crl CD; 245-271 g; young adult | female | oral | 5000 mg/mL in corn oil | 14 day observation; 0/5 animals dead; dyspnea | 5 animals used; tan to white powder | Gibberellins Tech., 88.0% | Hazleton Laboratories, Inc.; HLA 90305639; June 22, 1989; U.S. EPA, Office of Pesticide Programs; Health Effects Division; Tox Oneliners; MRID No. 41605801; EPA Chem. Code: 043801; Core Grade/Tox Record No. Guideline 008916; Dec. 17, 1991 |
| Gibberellic acid | 6300 | 5780 | NA | NA | rats | male | oral | NA | NA | NA | Pro Gibb 4% (gibberellic acid); Lot 28-T80-CF | Abbott Research Center; TA89-363; Feb. 20, 1990; U.S. EPA, Office of Pesticide Programs; Health Effects Division; Tox Oneliners; MRID No.41558201; EPA Chem. Code: 043801; Core Grade/Tox Record No. Guideline 008645; Oct. 8, 1991 |
| Gibberellic acid | 6300 | 6300 | NA | NA | rats | NA | oral | NA | NA | NA | NA | Agricultural Chemicals. Thomson, W.T., 4 vols., Fresno, CA, Thomson Publications, 1976/77 revision **(RTECS REFERENCE)** |
| Glutethimide | 600 | 600 | NA | NA | rats | NA | oral | NA | NA | NA | NA | Psychotropic Drugs and Related Compounds," 2nd ed., Usdin, E., and D.H. Efron, Dept. of Health, Education and Welfare, Washington, DC, 1972. **(RTECS REFERENCE)** |
| Glycerol | 12600 | 12600 | NA | NA | rats | NA | oral | NA | NA | reference in Russian | NA | Farmatsevtichnii Zhurnal (Kiev). (V/O Mezhdunarodnaya Kniga, 113095 Moscow, USSR) V.3-1930. 1977. **(RTECS REFERENCE)** |

**Rat and Mouse Oral LD50 Database**

| Reference Substance | Rat Oral $LD_{50}$[1] mg/kg | Rat Oral $LD_{50}$[2] mg/kg Primary Reference | $LD_{50}$[3] mg/kg (range) Primary Reference | $LD_{50}$ Calculation Method[4] Primary Reference | Animal Information (stock, weight, age) | Gender | Route and/or Method of Exposure | Dose | Observations | Notes | Reference Substance Source | Primary Reference |
|---|---|---|---|---|---|---|---|---|---|---|---|---|
| Glycerol | 12600 | 15890 (12.6 cc/kg; used density of 1.261 for conversion) | NA | NA | rats | NA | oral | NA | NA | Reference provided by ZEBET as source of RC value (i.e., from 1983/84 RTECS), but mg/kg value calculated from cc/kg value is different from RC value (12691 vs 15890 mg/kg). Maybe ZEBET didn't use density? This is not a primary reference. | NA | Woodard G, Johnson VD, Nelson AA. 1945. Acute toxicity of 2-methyl, 2-4 pentanediol. Fed Proc 4:142-143. (Supposed 1983/84 RTECS reference) |
| Glycerol | 12600 | 27500 | 23950 - 31610 (95% probability; +/- 1.96 S.D.; slope = 8.90) | probits (Bliss) | Wistar albino rats; 90-120 g | male | oral; stomach tube; single doses | 50% concentration in water; largest dose given was 50 g/kg | most deaths occurred in 2 days; all deaths occurred in 14 days | groups of 10 animals; 10 animals per dose | purified commercial grade | Smyth HF Jr, Seaton J, Fischer L. 1941. The single dose toxicity of some glycols and derivatives. J Ind Hyg Toxicol 23:259-268. *Mellon Institute, Pittsburgh, PA* |
| Glycerol | 12600 | 26730 - A 27650 - B (A = 21.2 mL/kg; B = 21.93 mL/kg; used density of 1.261 to convert to mg) | NA | A: Behrens (1929) B: Bliss (1938) | rats | NA | oral | NA | NA | 40 - 90 animals used; NICEATM used value B since authors stated it was more accurate | NA | Deichmann WB, Mergard EG. 1948. Comparative evaluation of methods employed to express the degree of toxicity of a compound. J Ind Hyg Toxicol 30:373-378. *Albany Medical College, Albany, NY; University of Cincinnati, Cincinnati, OH* |
| Haloperidol | 128 | 128 | 77 - 212 | NA | rat | NA | oral | NA | NA | unknown primary source of information | NA | Niemegeers CJC, Janssen PAJ. 1974. Bromoperidol, a new potent neuroleptic of the butyrophenone series. Arzneimittel-Forschung Drug Research 24 (1):45-52. *Janssen Pharmaceutica, Belgium* **(RTECS REFERENCE)** |
| Haloperidol | 128 | 165 | NA | NA | CFN; newborn | NA | oral | NA | NA | information from: drug applications from pharmaceutical manufacturers, the literature, and FDA labs | NA | Goldenthal EI. 1971. A compilation of LD50 values in newborn and adult animals. Toxicology and Applied Pharamacology 18:185-207. *Bureau of Drugs, Food and Drug Administration, Dept. of Health, Education, and Welfare, Rockville, MD.* |
| Haloperidol | 128 | 850 | 617 - 1173 | NA | Holtzman; adult | male | oral | NA | NA | information from: drug applications from pharmaceutical manufacturers, the literature, and FDA labs | NA | Goldenthal EI. 1971. A compilation of LD50 values in newborn and adult animals. Toxicology and Applied Pharamacology 18:185-207. *Bureau of Drugs, Food and Drug Administration, Dept. of Health, Education, and Welfare, Rockville, MD.* |
| Hexachlorophene | 56 | 9 | 2 (S.E.) | Miller and Tainter (1944) | Sprague-Dawley rats; 10 day | male and female | oral; stomach tube | 1% carboxymethylcellulose | observed for 10 day | approximately equal numbers of males and females; 28 rats | NA | Nieminen L, Bjondahn K, Mottonen M. 1973. Effect of hexachlorophene on the rat brain during ontogenesis. Fd Cosmet Toxicol 11:635-639. |
| Hexachlorophene | 56 | 42 | 5 (S.E.) | Miller and Tainter (1944) | Sprague-Dawley rats; 20 day | male and female | oral; stomach tube | 1% carboxymethylcellulose | observed for 10 day | approximately equal numbers of males and females; 22 rats; values from graph | NA | Nieminen L, Bjondahn K, Mottonen M. 1973. Effect of hexachlorophene on the rat brain during ontogenesis. Fd Cosmet Toxicol 11:635-639. |
| Hexachlorophene | 56 | 56 | 8 (S.E.) | Miller and Tainter (1944) | Sprague-Dawley rats; 300 day | male and female | oral; stomach tube | 1% carboxymethylcellulose | observed for 10 day | approximately equal numbers of males and females; 14 rats; values from graph | NA | Nieminen L, Bjondahn K, Mottonen M. 1973. Effect of hexachlorophene on the rat brain during ontogenesis. Fd Cosmet Toxicol 11:635-639. |
| Hexachlorophene | 56 | 56 | 51 - 62 (95% CI) | Litchfield and Wilcoxon method (1949) | Sherman strain rats (SPF); adult; | female | oral; stomach tube | peanut oil solution | died within 3 days; severe depression and diarrhea | 5 or more groups of 10 rats each | USP | Gaines TB, Kimbrough RD, Linder RE. 1973. The oral and dermal toxicity of hexachlorophene. Toxicology and Applied Pharmacology 25:332-343. **(RTECS REFERENCE)** |
| Hexachlorophene | 56 | 57 | 52 - 61 (95% CL; slope = 13.5) | Finney's maximum likelihood probit | Sherman strain rats (SPF); min wt. = 200 g; min age of 90 days | female | oral; stomach tube | chemical in peanut oil; 0.005mL/g of bw | observed for at least 14 days after dosing or until recovered from signs of toxicity | At least 40 rats used; min. of 10 animals per group tested; min. of 4 doses; animals used are the same as Gaines 1973 | technical grade | Gaines TB, Linder RE. 1986. Acute toxicity of pesticides in adult and weanling rats. Fundam Appl Toxicol 7(2):299-308. *Health Effects Research Laboratory, U.S. EPA, Research Triangle Park, NC* |
| Hexachlorophene | 56 | 57.6 | 50.8 - 65.5 (95% CI) | Weil (1952) method | Wistar albino rats; 400 g; 17 weeks | male | oral | corn oil solution; geometric dose factor of 1.2 | preliminary observations over a 1 - 2 week period after dosing; no significant mortalities occurred after 5 days; toxicity signs: lethargy, posterior paralysis, increased rate of respiration, hyperthermia, and diarrhea | 16 rats at 4 dosage levels; fasted overnight | U.S.P. grade; Givaudan Corp., Clifton, NJ | Nakaue HS, Dost FN, Buhler DR. 1973. Studies On The Toxicity Of Hexachlorophene In Rats. Toxicol Appl Pharmacol 24:239-49.A19 *Oregon State University, Corvallis, OR* |
| Hexachlorophene | 56 | 60 | 4 (S.E.) | Miller and Tainter (1944) | Sprague-Dawley; 70 day | male and female | oral; stomach tube | 1% carboxymethylcellulose | observed for 10 day | approximately equal numbers of males and females; 84 rats; values from graph | NA | Nieminen L, Bjondahn K, Mottonen M. 1973. Effect of hexachlorophene on the rat brain during ontogenesis. Fd Cosmet Toxicol 11:635-639. |
| Hexachlorophene | 56 | 60.3 | 55.0 - 66.0 (95% CI) | Weil (1952) method | Wistar albino rats; 100 g; 45 weeks | male | oral | corn oil solution; geometric dose factor of 1.2 | preliminary observations over a 1 - 2 week period after dosing; no significant mortalities occurred after 5 days; toxicity signs: lethargy, posterior paralysis, increased rate of respiration, hyperthermia, and diarrhea | 16 rats at 4 dosage levels; fasted overnight | U.S.P. grade; Givaudan Corp., Clifton, NJ | Nakaue HS, Dost FN, Buhler DR. 1973. Studies On The Toxicity Of Hexachlorophene In Rats. Toxicol Appl Pharmacol 24:239-49.A19 *Oregon State University, Corvallis, OR* |
| Hexachlorophene | 56 | 63 | 55.5 - 71.8 (95% CI) | Weil (1952) method | Wistar albino rats; 300 g; 10 weeks | male | oral | corn oil solution; geometric dose factor of 1.2 | preliminary observations over a 1 - 2 week period after dosing; no significant mortalities occurred after 5 days; toxicity signs: lethargy, posterior paralysis, increased rate of respiration, hyperthermia, and diarrhea | 16 rats at 4 dosage levels; fasted overnight | U.S.P. grade; Givaudan Corp., Clifton, NJ | Nakaue HS, Dost FN, Buhler DR. 1973. Studies On The Toxicity Of Hexachlorophene In Rats. Toxicol Appl Pharmacol 24:239-49.A19 *Oregon State University, Corvallis, OR* |
| Hexachlorophene | 56 | 63 | 45.9 - 87.2 (95% CI) | Weil (1952) method | Wistar albino rats; 200 g; 9 weeks | female | oral | corn oil solution; geometric dose factor of 1.2 | preliminary observations over a 1 - 2 week period after dosing; no significant mortalities occurred after 5 days; toxicity signs: lethargy, posterior paralysis, increased rate of respiration, hyperthermia, and diarrhea | 16 rats at 4 dosage levels; fasted overnight | U.S.P. grade; Givaudan Corp., Clifton, NJ | Nakaue HS, Dost FN, Buhler DR. 1973. Studies On The Toxicity Of Hexachlorophene In Rats. Toxicol Appl Pharmacol 24:239-49.A19 *Oregon State University, Corvallis, OR* |

**Rat and Mouse Oral LD50 Database**

| Reference Substance | Rat Oral $LD_{50}$[1] mg/kg | Rat Oral $LD_{50}$[2] mg/kg Primary Reference | $LD_{50}$[3] mg/kg (range) Primary Reference | $LD_{50}$ Calculation Method[4] Primary Reference | Animal Information (stock, weight, age) | Gender | Route and/or Method of Exposure | Dose | Observations | Notes | Reference Substance Source | Primary Reference |
|---|---|---|---|---|---|---|---|---|---|---|---|---|
| Hexachlorophene | 56 | 66 | 59 - 75<br>95% CL; slope 10.6 | Finney's maximum likelihood probit | Sherman strain rats (SPF); min wt. = 175 g; min age of 90 days | male | oral; stomach tube | chemical in peanut oil; 0.005 mL/g of bw | observed for at least 14 days after dosing or until recovered from signs of toxicity | At least 40 rats used; min. of 10 animals per group tested; min. of 4 doses; animals used are the same as Gaines 1973 | technical grade | Gaines TB, Linder RE. 1986. Acute toxicity of pesticides in adult and weanling rats. Fundam Appl Toxicol 7(2):299-308. *Health Effects Research Laboratory, U.S. EPA, Research Triangle Park, NC* |
| Hexachlorophene | 56 | 66 | 57 - 75<br>(95% CI) | Litchfield and Wilcoxon method (1949) | Sherman strain rats (SPF); adult | male | oral; stomach tube | peanut oil solution | died within 12 days; severe depression and diarrhea | 5 or more groups of 10 rats each; | NA | Gaines TB, Kimbrough RD, Linder RE. 1973. The oral and dermal toxicity of hexachlorophene. Toxicology and Applied Pharmacology 25:332 -343. *Environmental Protection Agency, Chamblee, GA* |
| Hexachlorophene | 56 | 69.1 | 64.6 - 94.2<br>(95% CI) | Weil (1952) method | Wistar albino rats; 100 g; 5 weeks | female | oral | corn oil solution; geometric dose factor of 1.2 | preliminary observations over a 1 - 2 week period after dosing; no significant mortalities occurred after 5 days; toxicity signs: lethargy, posterior paralysis, increased rate of respiration, hyperthermia, and diarrhea | 16 rats at 4 dosage levels; fasted overnight | U.S.P. grade; Givaudan Corp., Clifton, NJ | Nakaue HS, Dost FN, Buhler DR. 1973. Studies On The Toxicity Of Hexachlorophene In Rats. Toxicol Appl Pharmacol 24:239-49.A19 *Oregon State University, Corvallis, OR* |
| Hexachlorophene | 56 | 69.2 | 55.5 - 86.2<br>(95% CI) | Weil (1952) method | Wistar albino rats; 200 g; 7 weeks | male | oral | corn oil solution; geometric dose factor of 1.2 | preliminary observations over a 1 - 2 week period after dosing; no significant mortalities occurred after 5 days; toxicity signs: lethargy, posterior paralysis, increased rate of respiration, hyperthermia, and diarrhea | 16 rats at 4 dosage levels; fasted overnight | U.S.P. grade; Givaudan Corp., Clifton, NJ | Nakaue HS, Dost FN, Buhler DR. 1973. Studies On The Toxicity Of Hexachlorophene In Rats. Toxicol Appl Pharmacol 24:239-49.A19 *Oregon State University, Corvallis, OR* |
| Hexachlorophene | 56 | 83 | 6<br>(S.E.) | Miller and Tainter (1944) | Sprague-Dawley rats; 25 day | male and female | oral; stomach tube | 1% carboxymethylcellulose | observed for 10 day | approximately equal numbers of males and females; 12 rats; values from graph | NA | Nieminen L, Bjondahn K, Mottonen M. 1973. Effect of hexachlorophene on the rat brain during ontogenesis. Fd Cosmet Toxicol 11:635-639. |
| Hexachlorophene | 56 | 84 | 8<br>(S.E.) | Miller and Tainter (1944) | Sprague-Dawley rats; 50 day | male and female | oral; stomach tube | 1% carboxymethylcellulose | observed for 10 day | approximately equal numbers of males and females; 16 rats; values from graph | NA | Nieminen L, Bjondahn K, Mottonen M. 1973. Effect of hexachlorophene on the rat brain during ontogenesis. Fd Cosmet Toxicol 11:635-639. |
| Hexachlorophene | 56 | 87 | 79.2 - 95.5<br>(95% CI) | Weil (1952) method | Wistar albino rats; 67 g; 4 weeks | male | oral | corn oil solution; geometric dose factor of 12 | preliminary observations over a 1 - 2 week period after dosing; no significant mortalities occurred after 5 days; toxicity signs: lethargy, posterior paralysis, increased rate of respiration, hyperthermia, and diarrhea | 16 rats at 4 dosage levels; fasted overnight | U.S.P. grade; Givaudan Corp., Clifton, NJ | Nakaue HS, Dost FN, Buhler DR. 1973. Studies On The Toxicity Of Hexachlorophene In Rats. Toxicol Appl Pharmacol 24:239-49.A19 *Oregon State University, Corvallis, OR* |
| Hexachlorophene | 56 | 87 | 79.5 - 95.0<br>(95% CI) | Weil (1952) method | Wistar albino rats; 68 g; 4 weeks | female | oral | corn oil solution; geometric dose factor of 12 | preliminary observations over a 1 - 2 week period after dosing; no significant mortalities occurred after 5 days; toxicity signs: lethargy, posterior paralysis, increased rate of respiration, hyperthermia, and diarrhea | 16 rats at 4 dosage levels; fasted overnight | U.S.P. grade; Givaudan Corp., Clifton, NJ | Nakaue HS, Dost FN, Buhler DR. 1973. Studies On The Toxicity Of Hexachlorophene In Rats. Toxicol Appl Pharmacol 24:239-49.A19 *Oregon State University, Corvallis, OR* |
| Hexachlorophene | 56 | 104.03 | 84.45 - 128.20<br>(95% fiducial limit) | Bliss method | normal white rats; 150-250 g | NA | NA | 40, 80, 120, 160, 200 mg/kg | 25 rats used; 12 dead within 40 hours | 5 groups of 5 rats each | NA | Chung HL., 1963. Hexachlorophene (G-11) as a new specific drug against Clonorchiasis Sinensis. Chinese Medical Journal. 82. No. 11. November. *Peking Sino-Soviet Friendship Hospital, Peking, China* |
| Hexachlorophene | 56 | 111 | 12<br>(S.E.) | Miller and Tainter (1944) | Sprague-Dawley rats; 32 day | male and female | oral; stomach tube | 1% carboxymethylcellulose | observed for 10 days | approximately equal numbers of males and females; 66 rats | NA | Nieminen L, Bjondahn K, Mottonen M. 1973. Effect of hexachlorophene on the rat brain during ontogenesis. Fd Cosmet Toxicol 11:635-639. |
| Hexachlorophene | 56 | 120 | 110 - 131<br>(95% CI) | Litchfield and Wilcoxin 1949 | Sherman strain rats (SPF); weanling | female | oral; stomach tube | peanut oil solution | died within 5 days; depression and posterior paralysis | 5 or more groups of 10 rats each | NA | Gaines TB, Kimbrough RD, Linder RE. 1973. The oral and dermal toxicity of hexachlorophene. Toxicology and Applied Pharmacology 25:332 -343. *Environmental Protection Agency, Chamblee, GA* |
| Hexachlorophene | 56 | 121 | 112 - 133<br>95% CL; slope 14.8 | Finney's maximum likelihood probit | Sherman strain rats (SPF); 4-6 weeks | female | oral; stomach tube | chemical in peanut oil; 0.005 mL/g of bw | observed for at least 14 days after dosing or until recovered from signs of toxicity | At least 40 rats used; min. of 10 animals per group tested; min. of 4 doses; animals used are the same as Gaines 1973 | technical grade | Gaines TB, Linder RE. 1986. Acute toxicity of pesticides in adult and weanling rats. Fundam Appl Toxicol 7(2):299-308. *Health Effects Research Laboratory, U.S. EPA, Research Triangle Park, NC* |
| Hexachlorophene | 56 | 165 | 149 - 179<br>(95% CI) | Probit analysis | Crl-CD rats from Charles River Breeding lab; 220 -280 g; 60 days | male | oral; intragastric intubation | 0.5 - 3.9% suspens; dissolved or suspended in corn oil; single dose; 100, 140, 175, 200 mg/kg doses | observed daily for 14 days; death within 6 days; toxic symptoms: staining of the face and perineal area, weakness, diarrhea, weight loss | non fasted; 4 groups of 10; 40 rats used; 17 rats died | 99+% pure; Givaudan Corp., Clifton, NJ | Dashiell OL, Kennedy GL Jr. 1984. The effects of fasting on the acute oral toxicity of nine chemicals in the rat. J Appl Toxicol 4(6): 320-325. *E.I. Du Pont de Nemours & Co., Newark, DE* |
| Hexachlorophene | 56 | 215 | 191 - 237<br>(95% CI) | Probit analysis | Crl-CD rats from Charles River Breeding lab; 220 -280 g; 60 days | male | oral; intragastric intubation | 0.26 - 1.4% suspens dissolved or suspended in corn oil; single dose; 50, 100, 170, 225, 275 mg/kg doses | observed daily for 14 days; death within 6 days; toxic symptoms: staining of the face and perineal area, weakness, diarrhea, weight loss | fasted 24 hours before dosing;; 5 groups of 10; 50 rats used; 16 rats died | 99+% pure; Givaudan Corp., Clifton, NJ | Dashiell OL, Kennedy GL Jr. 1984. The effects of fasting on the acute oral toxicity of nine chemicals in the rat. J Appl Toxicol 4(6): 320-325. *E.I. Du Pont de Nemours & Co., Newark, DE* |
| Lactic acid | 3543 | 3543 | NA | NA | NA | NA | NA | NA | NA | NA | NA | Farm Chemicals Handbook. (Meister Pub., 37841 Euclid Ave., Willoughy, OH 44094). 1991. **(RTECS REFERENCE)** |
| Lactic acid | 3543 | 3730 | 3020 - 4610<br>(95% probability; +/- 1.96 S.D. slope = 4.04) | probits (Bliss) | Wistar albino rats; 90-120 g | male | oral; stomach tube; single doses | concentration in water; largest dose given was 50 g/kg | most deaths occurred in 2 days; all deaths occurred in 14 days | groups of 10 animals; 10 animals per dose | purified commercial grade | Smyth HF Jr, Seaton J, Fischer L. 1941. The single dose toxicity of some glycols and derivatives. J Ind Hyg Toxicol 23:259-268. *Mellon Institute, Pittsburgh, PA* |
| Lindane | 76 | 76 - 200 | NA | NA | rats | NA | oral | NA | NA | secondary source; unknown primary source | NA | Special Publication of the Entomological Society of America. (4603 Calvert Rd., College Park, MD 20740). 1978.<br><br>Kenaga EE, Morgan RW. 1978. Commercial and Experimental Organic Insecticides. 1978 Revision. Special Publication 78-1:1-76. *The Dow Chemical Company, Midland, MI* **(RTECS REFERENCE)** |

**Rat and Mouse Oral LD50 Database**

| Reference Substance | Rat Oral $LD_{50}$[1] mg/kg | Rat Oral $LD_{50}$[2] mg/kg Primary Reference | $LD_{50}$[3] mg/kg (range) Primary Reference | $LD_{50}$ Calculation Method[4] Primary Reference | Animal Information (stock, weight, age) | Gender | Route and/or Method of Exposure | Dose | Observations | Notes | Reference Substance Source | Primary Reference |
|---|---|---|---|---|---|---|---|---|---|---|---|---|
| Lindane | 76 | 88 | 76 - 101 (95% CL) | Litchfield and Wilcoxon method (1949) | Sherman strain rats; min. wt. = 175 g; min. age of 90 days | male | oral; stomach tube | chemical in peanut oil; 0.005 mL/g of bw | observed hourly on first day of dosage and twice a day thereafter until time of death; max survival 8 days; 14 days observation | 89 rats tested; not fasted | technical grade | Gaines TB. 1960. The acute toxicity of pesticides to rats. Toxicol Appl Pharmacol 2:88-99 *U.S. Dept. of Health, Education, and Welfare, Savannah, GA* |
| Lindane | 76 | 91 | 83 - 100 (95% CL) | Litchfield and Wilcoxon method (1949) | Sherman strain rats; min. wt. = 200 g; min. age of 90 days | female | oral; stomach tube | chemical in peanut oil; 0.005mL/g of bw | observed hourly on first day of dosage and twice a day thereafter until time of death; max survival 7 days; 14 days observation | 69 rats tested; not fasted | technical grade | Gaines TB. 1960. The acute toxicity of pesticides to rats. Toxicol Appl Pharmacol 2:88-99 *U.S. Dept. of Health, Education, and Welfare, Savannah, GA* |
| Lindane | 76 | 100 | NA | Litchfield and Wilcoxon method (1949) | CFY strain rats; 120+ g; adult | female | oral | NA | NA | NA | 99.5% pure; Budapest Chemical Works | Desi I. 1983. Neurotoxicological investigaton of pesticides in animal experiments. Neurobehav Toxicol 5:503-515. *National Institute of Hygiene, Hungary* |
| Lindane | 76 | 125 | NA | NA | rats | NA | oral; stomach tube | NA | hypersensitivity and convulsions | information from the laboratories of Division of Pharmacology, U.S. FDA.; fasted animals | NA | Lehman AJ. 1951. Chemicals in Foods: a report to the association of food and drug officials on current developments. Part II. Pesticides. Quarterly Bulletine (Association of Food and Drug Officials of the United States). Vol. 15:122-133. *U.S. FDA* |
| Lithium I carbonate | 525 553 | 525 | 460-598 (95% CI) | Litchfield and Wilcoxon method | Wistar rats; 180 g (ave) | female | oral | in solution; 347, 417, 500, 600, 720, 864 mg/kg | 7 days observation; deaths/dose (mg/kg): 347-0/10, 417-1/10, 500-3/10, 600-5/10, 720-8/10, 864-10/10; 14 deaths on day 1, 12 deaths on day 2 , 1 death on day 3; all rats at highest dose dead by day 2 | Used 10 rats/dose; RTECS reference in Japanese | reagent grade | Nakasawa M, et al. 1973. Lithium carbonate toxicity tests, rat and mouse acute toxicity. Kiso to Rinsho Clinical Report 7:1273-1277. **(RTECS REFERENCE)** |
| Lithium I carbonate | 525 553 | 553 | NA | NA | rats | NA | oral | NA | NA | RTECS reference that provides summary data only. LD50 value is unreferenced and unsupported | reagent grade | Filov VA, Ivin BA, Bandman AL (eds).1993. Harmful Chemical substances. Volume 1: Elements in Groups I-IV of the Periodic Table and their Inorganic Compounds. Ellis Horwood Limited (publisher). First published in Russian asVrednye khimicheskiye vechestra. Neorganicheskiye soyedineniga elementor I-IV grup. VA Filov, ed. Khimiya, St. Petersburg. 1988. |
| Lithium I carbonate | 525 553 | 590 | 505-691 (95% CI) | Litchfield and Wilcoxon method | Wistar rats; 220 g (ave) | male | oral | in solution; 347, 417, 500, 600, 720, 864 mg/kg | 7 d observation; deaths/dose (mg/kg): 347- 0/10, 417- 2/10, 500- 3/10, 600- 5/10, 720 - 8/10, 864- 10/10; most deaths on day 2; 3 deaths on day 1 at highest dose; 3 deaths at lower doses on day 3 | Used 10 rats/dose; RTECS reference, in Japanese | reagent grade | Nakasawa M, et al. 1973. Lithium carbonate toxicity tests, rat and mouse acute toxicity. Kiso to Rinsho Clinical Report 7:1273-1277. |
| Lithium I carbonate | 525 553 | 710 | NA | Thompson method; Weil tables | Carworth-Wistar rats; 90-120 g; 4-5 weeks | male | oral gastric intubation | in aqueous solution; concentration intubated = 200 mg/mL; dosages arranged in a logarithmic series differing by a factor of 2 | LD50 based on mortalities during a 14 day period; | non-fasted; groups of 5 rats; single oral dose toxicity | reagent grade | Smyth HF Jr, Carpenter CP, Weil CS, Pozzani UC, Striegel JA, Nycum JS. 1969. Range-finding toxicity data: List VII. Am Ind Hyg Assoc J 30:470-476. *Carnegie-Mellon University, Pittsburgh, PA* (LD50 value).<br><br>Smyth HF Jr, Carpenter CP, Weil CS, Pozzani UC, Striegel JA. 1962. Range-finding toxicity data: List VI. Am Ind Hyg Assoc J 23:95-107. *Mellon Institute of Industrial Research, Pittsburg, PA* (experimental parameters) |
| Meprobamate | 794 | 486 | +/- 24 (S.E.) | Miller and Tainter (1944) | FDRL-strain rats; 21 days | female | oral | NA | observed for 7 days post-treatment | NA | NA | Weinberg MS, Goldhamer RE, Carson S. 1966. Acute oral toxicity of various drugs in newborn rats after treatment of the dam during gestation. Toxic Appl Pharmac 9:234-239. *Food and Drug Research Laboratories, Inc., Maspeth, NY* |
| Meprobamate | 794 | 794 (outlier) | 584 - 1080 (95% CL) | Litchfield and Wilcoxon method (1949) | rats; 117-180 g; adult | female | oral | suspension; 2.3 - 23.2 mg/kg dose levels | hypothermia, prostration, bradypnea, ptosis, sluggish corneal reflex | 5 rats per dose level; 20 rats used | NA | Franko BV, Ward JW, Gilbert DL, Woodard G. 1971. Toxicologic studies of glycopyrralate in combination with other drugs. Toxicology and Appled Pharmacology 19:93-102. *Woodard Research Corporation, Herndon, VA* **(RTECS REFERENCE)** |
| Meprobamate | 794 | 1286 | +/- 81 (S.E.) | Miller and Tainter (1944) | FDRL-strain rats; 100 days | male | oral | NA | observed for 7 days post-treatment | NA | NA | Weinberg MS, Goldhamer RE, Carson S. 1966. Acute oral toxicity of various drugs in newborn rats after treatment of the dam during gestation. Toxic Appl Pharmac 9:234-239. *Food and Drug Research Laboratories, Inc., Maspeth, NY* |
| Meprobamate | 794 | 1290 | +/- 104 (S.E.) | Miller and Tainter (1944) | FDRL-strain rats; 63 days | male | oral | NA | observed for 7 days post-treatment | NA | NA | Weinberg MS, Goldhamer RE, Carson S. 1966. Acute oral toxicity of various drugs in newborn rats after treatment of the dam during gestation. Toxic Appl Pharmac 9:234-239. *Food and Drug Research Laboratories, Inc., Maspeth, NY* |
| Meprobamate | 794 | 1346 | +/- 82 (S.E.) | Miller and Tainter (1944) | FDRL-strain rats; 21 days | male | oral | NA | observed for 7 days post-treatment | NA | NA | Weinberg MS, Goldhamer RE, Carson S. 1966. Acute oral toxicity of various drugs in newborn rats after treatment of the dam during gestation. Toxic Appl Pharmac 9:234-239. *Food and Drug Research Laboratories, Inc., Maspeth, NY* |
| Meprobamate | 794 | 1361 | +/- 76 (S.E.) | Miller and Tainter (1944) | FDRL-strain rats; 100 days | female | oral | NA | observed for 7 days post-treatment | NA | NA | Weinberg MS, Goldhamer RE, Carson S. 1966. Acute oral toxicity of various drugs in newborn rats after treatment of the dam during gestation. Toxic Appl Pharmac 9:234-239. *Food and Drug Research Laboratories, Inc., Maspeth, NY* |
| Meprobamate | 794 | 1410 | +/- 83 (S.E.) | Miller and Tainter (1944) | FDRL-strain rats; 63 days | female | oral | NA | observed for 7 days post-treatment | NA | NA | Weinberg MS, Goldhamer RE, Carson S. 1966. Acute oral toxicity of various drugs in newborn rats after treatment of the dam during gestation. Toxic Appl Pharmac 9:234-239. *Food and Drug Research Laboratories, Inc., Maspeth, NY* |
| Meprobamate | 794 | 1470 | | Litchfield and Wilcoxon method (1949) | rats; 117-180 g; adult | male | oral | suspension; 2.3 - 23.2 mg/kg dose levels | hypothermia, prostration, bradypnea, ptosis, sluggish corneal reflex | 5 rats per dose level; 20 rats used | NA | Franko BV, Ward JW, Gilbert DL, Woodard G. 1971. Toxicologic studies of glycopyrralate in combination with other drugs. Toxicology and Appled Pharmacology 19:93-102. *Woodard Research Corporation, Herndon, VA* |
| Meprobamate | 794 | 1522 | +/- 16 (S.E.) | Miller and Tainter (1944) | Charles River CD and Sprague-Dawley strains; > 100 g; adult | NA | oral intubation | up to 50 mL/kg | rats observed for 7 days; observed up to 14 days when heavy metals or other compounds that produce latent death were investigated | fasted overnight | NA | Yeary RA, Benish RA, Finkelstein M. 1966. Acute Toxicity of Drugs in Newborn Animals. Journal of Pediatrics 69 (4):663-667. *Dept. of Veterinary Preventive Medicine, Ohio State University, Columbus, OH* |
| Mercury II chloride | 1 | 1 - 5 | NA | NA | rats | NA | oral | NA | NA | lists LD50 range as 1 - 5 mg/kg | NA | Pesticide Manual. (The British Crop Protection Council, 20 Bridport Rd., Thornton Heath CR4 7QG, UK) V.1- 1968. 1991. **(RTECS REFERENCE)** |
| Mercury II chloride | 1 | 12 | 9 - 17 (95% CL) | acceptable methods (e.g., Bliss, Litchfield and Wilcoxon, Weil, Thompson, etc.) | Sprague-Dawley rats; 190-300 g | female | oral gavage | single dose | 14 day observation; toxicity symptoms: motor activity decrease, respiratory effects, tremors, blanching, piloerection, diarrhea, chouromodacryorrhoea; time to onset of signs < 1day; duration of signs 11 days; animals fasted 16 -20 hours before administration | UDP Test | NA | Yam J, Reer PJ, Bruce RD. 1991. Comparison of the up-and-down method and the fixed-dose procedure for acute oral toxicity testing. Food Chem Toxicol 29(4):259-264. *The Procter and Gamble Co., Cincinnati, OH* |

**Rat and Mouse Oral LD50 Database**

| Reference Substance | Rat Oral $LD_{50}$[1] mg/kg | Rat Oral $LD_{50}$[2] mg/kg Primary Reference | $LD_{50}$[3] mg/kg (range) Primary Reference | $LD_{50}$ Calculation Method[4] Primary Reference | Animal Information (stock, weight, age) | Gender | Route and/or Method of Exposure | Dose | Observations | Notes | Reference Substance Source | Primary Reference |
|---|---|---|---|---|---|---|---|---|---|---|---|---|
| Mercury II chloride | 1 | 24 | 17.9 - 32.2 | Bliss-Probit method | Sprague-Dawley rats; 5 weeks | male | oral gavage | dissolved in saline; range (mg/kg) of doses 10.6, 13.8, 17.9, 23.3, 30.3, 39.7 | observed at 6 hours after dosing and a once a day for 1-2 weeks; most dead within 3 days; 25/60 died; toxic symptoms: piloerection, drooling, hypothermia, abdominal posture, tremor, and diarrhea; dose (mg/kg), dead rats per dose: 10.6-0/10; 13.8-1/10; 17.9-1/10; 23.3-4/10; 30.3-9/10; 39.7-10/10 | animals acclimated to environment for 1 week before testing; 6 groups of10 rats each; fasted 16 hours before dosing; 100% lethal dose = 39.7 mg/kg; 0% lethal dose = 10.6 mg/kg | Kishida Chemical Co., Ltd. | Kitagawa H, Saito H, Sugimoto T, Yanaura S, Kitagawa H, Hosokawa T, Sakamoto K. 1982. Effects of diospropyl-1,3-dithiol-2-ylidene malonate (NKK-105) on acute toxicity of various drugs and heavy metals. J Toxicol Sci 7(2):123-34. *Chiba University; Hoshi College of Pharmacy; Showa University -- Japan* |
| Mercury II chloride | 1 | 32 | NA | Rosiello (1979) and Bliss (1938) | rats | male | oral | 10, 15, 25, 40, 60, 100 mg/kg | 15 mg/kg: 0/3 dead; 25mg/kg: 0/3 dead; 40 mg/kg: 3/3 dead; 60 mg/kg: 3/3 dead; 6/12 rats dead; LD50 from 12 rats used; LD50 recalculated using US EPA Benchmark Dose soft-ware; Lorke used data from 10 and 100 mg/kg in range finder for all animal groups; omitted this data in recalculation; orginial LD50 from Lorke = 32 mg/kg | acclimated for 5 days; observed for 14 days; 4 groups used for each dose (1, 2, 3, 5 animals per group; total of 11 rats per dose; range finder: 10 mg/kg - 0/3 dead; 100 mg/kg - 3/3 dead; 1000 mg/kg - 3/3 dead; 9 rats in range finder | NA | Lorke D. 1983. A new approach to practical acute toxicity testing. Arch Toxicol 54(4):275-288. *Institut fur Toxikologie, Wuppertal, Federal Republic of Germany* |
| Mercury II chloride | 1 | 39 | NA | Rosiello (1979) and Bliss (1938) | rats | male | oral | 10, 15, 25, 40, 60, 100 mg/kg | 15 mg/kg: 1/11 dead; 25mg/kg: 1/11 dead; 40 mg/kg: 7/11 dead; 60 mg/kg: 10/11 dead; 19/44 rats dead; LD50 from 44 rats used; LD50 recalculated using US EPA Benchmark Dose software; Lorke used data from 10 and 100 mg/kg in range finder for all animal groups; omitted this data in recalculation; Orginial LD50 from Lorke = 37 mg/kg; this value based on accumulated data from 4 different test groups | acclimated for five days; observed for 14 days; 4 groups used for each dose (1, 2, 3, 5 animals per group; total of 11 rats per dose; range finder showed: 10 mg/kg - 0/3 dead; 100 mg/kg - 3/3 dead; 1000 mg/kg - 3/3 dead; 9 rats in range finder | NA | Lorke D. 1983. A new approach to practical acute toxicity testing. Arch Toxicol 54(4):275-288. *Institut fur Toxikologie, Wuppertal, Federal Republic of Germany* |
| Mercury II chloride | 1 | 40 | NA | Rosiello (1979) and Bliss (1938) | rats | male | oral | 10, 15, 25, 40, 60, 100 mg/kg | 15 mg/kg: 1/5 dead; 25mg/kg: 1/5 dead; 40 mg/kg: 3/5 dead; 60 mg/kg: 5/5 dead; 10/20 rats dead; LD50 based on 20 rats used; LD50 recalculated using US EPA Benchmark Dose software; Lorke used data from 10 and 100 mg/kg in range finder for all animal groups; omitted this data in recalculation; orginial LD50 from Lorke = 32 mg/kg | acclimated for five days; observed for 14 days; 4 groups used for each dose (1, 2, 3, 5 animals per group; total of 11 rats per dose; range finder showed: 10 mg/kg - 0/3 dead; 100 mg/kg - 3/3 dead; 1000 mg/kg - 3/3 dead; 9 rats in range finder | NA | Lorke D. 1983. A new approach to practical acute toxicity testing. Arch Toxicol 54(4):275-288. *Institut fur Toxikologie, Wuppertal, Federal Republic of Germany* |
| Mercury II chloride | 1 | 49 | NA | Rosiello (1979) and Bliss (1938) | rats | male | oral | 10, 15, 25, 40, 60, 100 mg/kg | 15 mg/kg: 0/1 dead; 25mg/kg: 0/1 dead; 40 mg/kg: 0/1 dead; 60 mg/kg: 1/1 dead; 1/4 rats dead; LD50 from 4 rats used; T306 | acclimated for five days; observed for 14 days; 4 groups used for each dose (1, 2, 3, 5 animals per group; total of 11 rats per dose; range finder showed: 10 mg/kg - 0/3 dead; 100 mg/kg - 3/3 dead; 1000 mg/kg - 3/3 dead; 9 rats in range finder | NA | Lorke D. 1983. A new approach to practical acute toxicity testing. Arch Toxicol 54(4):275-288. *Institut fur Toxikologie, Wuppertal, Federal Republic of Germany* |
| Mercury II chloride | 1 | 50 | 40 - 63 | Thompson and Weil; 1952; method of moving averages | albino rats; 18 weeks | female | oral; stomach tube | 1 mL/200 g bw | observed after 8 days after single oral administration | 6 dose levels per group, 6 rats per group; 36 rats used | NA | Kostial K, Kello D, Jugo S, Rabar I, Maljkovic, T. 1978. Influence of age on metal metabolism and toxicity. Environ Health Perspect 25:81-8. *Yugoslav Academy of Sciences and Art, Zagreb, Yugoslavia* |
| Mercury II chloride | 1 | 50 | 43 - 59 | Thompson and Weil; 1952; method of moving averages | albino rats; 54 weeks | female | oral; stomach tube | 1 mL/200 g bw | observed after 8 days after single oral administration | 6 dose levels per group, 6 rats per group; 36 rats used | NA | Kostial K, Kello D, Jugo S, Rabar I, Maljkovic, T. 1978. Influence of age on metal metabolism and toxicity. Environ Health Perspect 25:81-86. *Yugoslav Academy of Sciences and Art, Zagreb, Yugoslavia* |
| Mercury II chloride | 1 | 51 | 39 - 66 (95% CL) | acceptable methods (e.g., Bliss, Litchfield and Wilcoxon, Weil, Thompson, etc.) | Sprague-Dawley rats | male | oral gavage | single dose | 14 day observation; toxicity symptoms: posture, respiratory effects, lethargy, abnormal gait, prostrate coma, salivation; time to onset of signs < 1 day; duration of signs 5 days | 3 dose levels (5 male each); 15 rats used; OECD TG401 (1981) followed for experimental procedures; 8 rats dead (average per test) | NA | Vandenheuvel MJ, Clark DG, Fielder RJ, Koundakjian PP, Oliver GJA, Pelling D, Tomlinson NJ, Walker AP. 1990. Jul. The International Validation Of A Fixed-Dose Procedure As An Alternative To The Classical LD50 Test Food And Chemical Toxicology 28(7):469-482. |
| Mercury II chloride | 1 | 52 | NA | Rosiello (1979) and Bliss (1938) | rats | male | oral | 10, 15, 25, 40, 60, 100 mg/kg | 15 mg/kg: 0/2 dead; 25mg/kg: 0/2 dead; 40 mg/kg: 1/2 dead; 60 mg/kg: 1/2 dead; 2/8 rats dead; LD50 based on 8 rats used; LD50 recalculated using US EPA Benchmark Dose software; Lorke used data from 10 and 100 mg/kg in range finder for all animal groups; omitted this data in recalculation; orginial LD50 from Lorke = 50 mg/kg | acclimated for five days; observed for 14 days; 4 groups used for each dose (1, 2, 3, 5 animals per group; total of 11 rats per dose; range finder showed: 10 mg/kg - 0/3 dead; 100 mg/kg - 3/3 dead; 1000 mg/kg - 3/3 dead; 9 rats in range finder | NA | Lorke D. 1983. A new approach to practical acute toxicity testing. Arch Toxicol 54(4):275-288. *Institut fur Toxikologie, Wuppertal, Federal Republic of Germany* |
| Mercury II chloride | 1 | 92 | 77 - 108 | Thompson and Weil; 1952; method of moving averages | albino rats; 6 weeks | female | oral; stomach tube | 1 mL/200 g bw; 6 dose levels in each group | observed after 8 days after single oral administration | 6 dose levels per group, 6 rats per group; 36 rats used | NA | Kostial K, Kello D, Jugo S, Rabar I, Maljkovic, T. 1978. Influence of age on metal metabolism and toxicity. Environ Health Perspect 25:81-86. *Yugoslav Academy of Sciences and Art, Zagreb, Yugoslavia* |
| Mercury II chloride | 1 | 160 (outlier) | 119 - 235 (95% CL) | acceptable methods (e.g., Bliss, Litchfield and Wilcoxon, Weil, Thompson, etc.) | Sprague-Dawley rats | female | oral gavage | single dose | 14 day observation; toxicity symptoms: posture, respiratory effects, lethargy, abnormal gait, prostrate coma, salivation; time to onset of signs < 1 day; duration of signs 5 days | 3 dose levels (5 female each); 15 rats used; OECD TG401 (1981) followed for experimental procedures; 8 rats dead (average per test) | NA | Vandenheuvel MJ, Clark DG, Fielder RJ, Koundakjian PP, Oliver GJA, Pelling D, Tomlinson NJ, Walker AP. 1990. Jul. The International Validation Of A Fixed-Dose Procedure As An Alternative To The Classical LD50 Test Food And Chemical Toxicology 28(7):469-482. |
| Methanol | 5628 | 5628 | 4613 - 6866 | NA | rats | NA | oral | NA | NA | reference in Russian; was also cited in 1983/84 RTECS but value was different from that used by RC and reference was not provided by ZEBET | NA | Lazinov AG, Broitman AT. 1975. On the combined action of 2, 6-dimethylphenol and methanol. Gigiena Truda i Professional'nye Zabolevaniya 19(11):27-30. **(RTECS REFERENCE)** |

**Rat and Mouse Oral LD50 Database**

| Reference Substance | Rat Oral $LD_{50}$[1] mg/kg | Rat Oral $LD_{50}$[2] mg/kg Primary Reference | $LD_{50}$[3] mg/kg (range) Primary Reference | $LD_{50}$ Calculation Method[4] Primary Reference | Animal Information (stock, weight, age) | Gender | Route and/or Method of Exposure | Dose | Observations | Notes | Reference Substance Source | Primary Reference |
|---|---|---|---|---|---|---|---|---|---|---|---|---|
| Methanol | 5628 | 5890 (7.4 mL/kg; used density of 0.796 to convert to mg/kg) | 4776 - 7244 (95% CL; 6.0 - 9.1 mL/kg) | Litchfield and Wilcoxon method and probit analysis | Sprague-Dawley rats; 16-50 g; 14 days | male and female | oral | solvent used in undiluted form | animals observed for a week after medication | nonfasted rats; 6-12 rats of both sexes used for studies; solvent used in undiluted form | analytical grade meeting A.C.S. specifications | Kimura ET, Ebert DM, Dodge PW. 1971. Acute toxicity and limits of solvent residue for sixteen organic solvents. Toxicol Appl Pharmacol 19:699-704. *Abbott Laboratories, Chicago, IL* |
| Methanol | 5628 | 7005 (8.8 mL/kg; used density of 0.796 to convert to mg/kg) | 5731 - 8597 (95% CL; 7.2 - 10.8 mL/kg) | Litchfield and Wilcoxon method and probit analysis | Sprague-Dawley rats; 300-470 g; older adult | male | oral | solvent used in undiluted form | animals observed for a week after medication | nonfasted rats; groups of 6 rats used for the studies; solvent used in undiluted form | analytical grade meeting A.C.S. specifications | Kimura ET, Ebert DM, Dodge PW. 1971. Acute toxicity and limits of solvent residue for sixteen organic solvents. Toxicol Appl Pharmacol 19:699-704. *Abbott Laboratories, Chicago, IL* |
| Methanol | 5628 | 7400 | NA | NA | rats; 150-250 g; 70- 100 days | male (predominately) | oral | NA | observed for 6 days | 18 hour fasting before dosing | NA | Welch, H, Slocum GG. 1943. Relation of length of carbon chain to the primary and functional toxicities of alcohols. J Lab Chem Med 28:1440-1445. *U.S. FDA, Washington, D.C.* |
| Methanol | 5628 | 10348 (13.0 mL/kg; used density of 0.796 to convert to mg/kg) | 9472 - 11303 (95% CL; 11.9 - 14.2 mL/kg) | Litchfield and Wilcoxon method and probit analysis | Sprague-Dawley rats; 80-160 g; young adult | male | oral | solvent used in undiluted form | animals observed for a week after medication | nonfasted rats; groups of 6 rats used for the studies; solvent used in undiluted form | analytical grade meeting A.C.S. specifications | Kimura ET, Ebert DM, Dodge PW. 1971. Acute toxicity and limits of solvent residue for sixteen organic solvents. Toxicol Appl Pharmacol 19:699-704. *Abbott Laboratories, Chicago, IL* |
| Methanol | 5628 | 12086 - A 11303 - B (A = 15.28 mL/kg; B = 14.29 mL/kg; used density of 0.791 for conversion to mg/kg) | NA | A= Behrens (1929) B = Bliss (1938) | rats | NA | oral | NA | NA | 40 - 90 animals used; NICEATM used value B since authors stated it was more accurate | NA | Deichmann WB, Mergard EG. 1948. Comparative evaluation of methods employed to express the degree of toxicity of a compound. J Ind Hyg Toxicol 30:373-378 *Albany Medical College, Albany, NY; University of Cincinnati, Cincinnati, OH* |
| Methanol | 5628 | 12880 | 11440 - 14460 (95% probability; +/- 1.96 S.D. slope = 8.53) | probits (Bliss) | Wistar albino rats; 90-120 g | male | oral; stomach tube; single doses | 50% concentration in water; largest dose given was 50 g/kg | most deaths occurred in 2 days; all deaths occurred in 14 days | groups of 10 animals; 10 animals per dose | purified commercial grade | Smyth HF Jr, Seaton J, Fischer, L. 1941. The single dose toxicity of some glycols and derivatives. J Ind Hyg Toxicol 23:259-268. *Mellon Institute, Pittsburgh, PA* ( This was the value used by the RC [from 1977 RTECS]). |
| Nicotine | 50 | 50 - 60 | NA | NA | rats | NA | oral | NA | NA | reference is secondary; assumed to be values from Lehman (1951) | NA | Farm Chemicals Handbook. (Meister Pub., 37841 Euclid Ave., Willoughy, OH 44094). 1991. **(RTECS REFERENCE)** |
| Nicotine | 50 | 50 - 60 | NA | NA | rats | NA | oral; stomach tube | NA | clonic convulsions; onset within minutes; paralysis of respiratory muscles and death | information from the laboratories of Division of Pharmacology, U.S. FDA.; fasted animals | NA | Lehman AJ. 1951. Chemicals in Foods: a report to the association of food and drug officials on current developments. Part II. Pesticides. Quarterly Bulletine (Association of Food and Drug Officials of the United States). Vol.15:122-133. *U.S. FDA* |
| Nicotine | 50 | 68 | 41 -129 (95% CL; slope = 3.0 [S.E. 0.8]) | acceptable methods (e.g., Bliss, Litchfield and Wilcoxon, Weil, Thompson, etc.) | Sprague-Dawley rats | male | oral gavage | single dose | 14 day observation; toxicity symptoms: Ptosis, posture, respiratory effects, lethargy, abnormal gait, tremors, convulsions, prostrate coma; time to onset of signs < 1day; duration of signs 3 days; 13 rats dead (average per test) | 3 dose levels (5 male each); 15 rats used; OECD TG401 (1981) followed for experimental procedures | NA | Vandenheuvel MJ, Clark DG, Fielder RJ, Koundakjian PP, Oliver GJA, Pelling D, Tomlinson NJ, Walker AP. 1990. Jul. The International Validation Of A Fixed-Dose Procedure As An Alternative To The Classical LD50 Test Food And Chemical Toxicology 28(7):469-482. |
| Nicotine | 50 | 70 | 49 - 109 (95% CL) | acceptable methods (e.g., Bliss, Litchfield and Wilcoxon, Weil, Thompson, etc.) | Sprague-Dawley rats | male and female | oral gavage | single dose | 14 day observation; toxicity symptoms: Ptosis, posture, respiratory effects, lethargy, abnormal gait, tremors, convulsions, prostrate coma; time to onset of signs < 1day; duration of signs 3 days; 13 rats dead (average per test) | 3 dose levels (5 male each and 5 female); 30 rats used; OECD TG401 (1981) followed for experimental procedures | NA | Vandenheuvel MJ, Clark DG, Fielder RJ, Koundakjian PP, Oliver GJA, Pelling D, Tomlinson NJ, Walker AP. 1990. Jul. The International Validation Of A Fixed-Dose Procedure As An Alternative To The Classical LD50 Test Food And Chemical Toxicology 28(7):469-482. |
| Nicotine | 50 | 70 | 51 - 96 (95% CL) | acceptable methods (e.g., Bliss, Litchfield and Wilcoxon, Weil, Thompson, etc.) | Sprague-Dawley rats; 190-300 g | female | oral gavage | single dose | 14 day observation; toxicity symptoms: motor activity decrease, respiratory effects, tremors, blanching, piloerection, ataxia, convulsions, extension of the limbs; time to onset of signs < 1day; duration of signs 5 days; animals fasted 16 -20 hours before administration | UDP Test | NA | Yam J, Reer PJ, Bruce RD. 1991. Comparison of the up-and-down method and the fixed-dose procedure for acute oral toxicity testing. Food Chem Toxicol 29(4):259-264. *The Procter and Gamble Co., Cincinnati, OH* |
| Nicotine | 50 | 71 | 42 - 128 (95% CL) | acceptable methods (e.g., Bliss, Litchfield and Wilcoxon, Weil, Thompson, etc.) | Sprague-Dawley rats | female | oral gavage | single dose | 14 day observation; toxicity symptoms: Ptosis, posture, respiratory effects, lethargy, abnormal gait, tremors, convulsions, prostrate coma; time to onset of signs < 1day; duration of signs 3 days; 13 rats dead (average per test) | 3 dose levels (5 female each); 15 rats used; OECD TG401 (1981) followed for experimental procedures | NA | Vandenheuvel MJ, Clark DG, Fielder RJ, Koundakjian PP, Oliver GJA, Pelling D, Tomlinson NJ, Walker AP. 1990. Jul. The International Validation Of A Fixed-Dose Procedure As An Alternative To The Classical LD50 Test Food And Chemical Toxicology 28(7):469-482. |
| Paraquat | 57 | 57 | NA | NA | rats | NA | oral | NA | NA | NA | NA | *Residue Reviews. (Springer-Verlag New York, Inc., Service Center, 44 Hartz Way, Secaucus, NJ 07094) V.1- 1962. 1965.* Bailey GW, White JL. 1965. Herbicides: a compilation of their physical, chemical, and biological properties. Journal paper no. 2413. Purdue University Agricultural Experiment Station. Residue Reviews 10:7-122. **(RTECS REFERENCE)** |

**Rat and Mouse Oral LD50 Database**

| Reference Substance | Rat Oral $LD_{50}$[1] mg/kg | Rat Oral $LD_{50}$[2] mg/kg Primary Reference | $LD_{50}$[3] mg/kg (range) Primary Reference | $LD_{50}$ Calculation Method[4] Primary Reference | Animal Information (stock, weight, age) | Gender | Route and/or Method of Exposure | Dose | Observations | Notes | Reference Substance Source | Primary Reference |
|---|---|---|---|---|---|---|---|---|---|---|---|---|
| Paraquat | 57 | 95 | 79-114 (95 % CL) | Litchfield and Wilcoxon method (1949) | Wistar rats; 292 +/- 13 g | male | oral intubation | single dose | observe several times daily and at least once on weekends for 30 days; most of the rats that died did so within 5 days of administration; weight loss, diarrhea, piloerection and red drainage around mouth, eyes, and nose | used 29 paraquat-dichloride | Ortho Chemical Co. | Sharp CW, Ottolenghi A, Posner HS. 1972. Correlation of paraquat toxicity woth tissue concentrations and weight loss of the rat. Toxicology and Appied Pharmacology 22:241-251. *NIEHS, RTP, NC USA* |
| Paraquat | 57 | 100 | 85 - 117 (95% CL) | Litchfield and Wilcoxon method (1949) | Sherman strain rats; min. wt. = 175 g; min. age of 90 days | male | oral; stomach tube | chemical in peanut oil; 0.005 mL/g of bw | observed hourly on first day of dosage and twice a day thereafter until time of death; max survival 14 days | 50 rats tested | technical grade | Gaines TB. 1969. Acute toxicity of pesticides. Toxicol Appl Pharmacol 14(3):515-34. *U.S. Dept. of Health, Education, and Welfare, Atlanta, GA* |
| Paraquat | 57 | 110 | 90 - 134 (95% CL) | Litchfield and Wilcoxon method (1949) | Sherman strain rats; min. wt. = 200 g; min. age of 90 days | female | oral; stomach tube | chemical in peanut oil; 0.005 mL/g of bw | observed hourly on first day of dosage and twice a day thereafter until time of death; max survival 13 days | 50 rats tested | technical grade | Gaines TB. 1969. Acute toxicity of pesticides. Toxicol Appl Pharmacol 14(3):515-34. *U.S. Dept. of Health, Education, and Welfare, Atlanta, GA* |
| Paraquat | 57 | 112 (paraquat ion) | 104-122 (95% CL) | Thompson (1947); moving average interpolation method | rats; 130-160 g | male and female | oral; in food | single dose; mixed salt of paraquat in food with 20% malt extract and fed to rats | fasted overnight; observed up to 12 days | 6 rats per group | 99.9% pure paraquat dichloride | Clark DG, McElligott TF, Hurst EW. 1966. The toxicity of paraquat. Br J Ind Med 23:126-132. *Imperial Chemical Industries Limited, Cheshire, UK* |
| Paraquat | 57 | 115 | 90-150 (95% CL) | Litchfield and Wilcoxin method (1949) | Sprague Dawley rat; 290 +/- 37 g | male | oral intubation | single dose | observe several times daily and at least once on weekends for 30 days; most of the rats that died did so within 5 days of administration; weight loss, diarrhea, piloerection and red drainage around mouth, eyes, and nose | used 29 paraquat-dichloride | Ortho Chemical Co. | Sharp CW, Ottolenghi A, Posner HS. 1972. Correlation of paraquat toxicity woth tissue concentrations and weight loss of the rat. Toxicology and Appied Pharmacology 22:241-251. *NIEHS, RTP, NC USA* |
| Paraquat | 57 | 141 (paraquat ion) | 140-142 (95% CL) | Thompson (1947); moving average interpolation method | rats; 130-160 g | male and female | oral; in food | single dose; mixed salt of paraquat in food with 20% malt extract and fed to rats | fasted overnight; observed up to 12 days | 6 rats per group | 99.9% pure paraquat dimetho-sulfate | Clark DG, McElligott TF, Hurst EW. 1966. The toxicity of paraquat. Br J Ind Med 23:126-132. *Imperial Chemical Industries Limited, Cheshire, UK* |
| Paraquat | 57 | 150 (paraquat ion) | 139-162 (95% CL) | Thompson (1947); moving average interpolation method | rats; 150-205 g | male and female | oral; in food | single dose; mixed salt of paraquat in food with 20% malt extract and fed to rats | fasted overnight; observed up to 12 days | 10 rats per group | 99.9% pure paraquat dichloride | Clark DG, McElligott TF, Hurst EW. 1966. The toxicity of paraquat. Br J Ind Med 23:126-132. *Imperial Chemical Industries Limited, Cheshire, UK* |
| Parathion | 2 | 1.8 (actual value) | 1.26 - 2.57 (95% CL; slope = 1.5 [1.0 - 2.25 95% CL]) | Litchfield and Wilcoxin method (1949) | Osborne-Mendel (?) rats | female | oral | 5 dose levels; constant vol. dose of solvent of 5 mL/kg; single dose; aqueous solution (sodium carboxymethyl-cellulose, 0.5%, NaCl, 0.9%; benzyl alcohol, 0.2% v/v; Tween 80, 0.4%) | observed for 24 hours; deaths infrequent after 24 hour; onset of anticholinesterase poisoning syptoms slower with corn oil than DMSO or aqueous | fasted for 20 hours | NA | Weis LR, Orzel RA. 1967. Some comparative toxicologic and pharmacologic effects of dimethyl sulfoxide as a pesticide solvent. Toxicology and Applied Pharmacology 11:546-557. *U.S. FDA, Washington, D.C.* **(RTECS REFERENCE)** |
| Parathion | 2 | 2.1 | 1.72 - 2.56 (95% CL; slope = 1.25 [1.01 - 1.55 95% CL]) | Litchfield and Wilcoxon method (1949) | Osborne-Mendel (?) rats | female | oral | 5 dose levels; constant vol. dose of solvent of 5 mL/kg; single dose; cmpd dissolved in DMSO (industrial grade, 99% pure) | observed for 24 hours; deaths infrequent after 24 hour; onset of anticholinesterase poisoning syptoms slower with corn oil than DMSO or aqueous | fasted for 20 hours | NA | Weis LR, Orzel RA. 1967. Some comparative toxicologic and pharmacologic effects of dimethyl sulfoxide as a pesticide solvent. Toxicology and Applied Pharmacology 11:546-557. *U.S. FDA, Washington, D.C.* |
| Parathion | 2 | 3 | NA | NA | rats | NA | oral; stomach tube | NA | generalized fibrillary tremors, salivation, lacrimation, diarrhea, and convulsions; onset within 1 hour | information from the laboratories of Division of Pharmacology, U.S. FDA.; fasted animals; LD50 value is from research by Frawley et al. 1952 | NA | Lehman AJ. 1951. Chemicals in Foods: a report to the association of food and drug officials on current developments. Part II. Pesticides. Quarterly Bulletine (Association of Food and Drug Officials of the United States). Vol.15:122-133. *U.S. FDA* |
| Parathion | 2 | 3 | +/- 0.25 (S.E.) | Litchfield and Fertig (1941) | Osborne-Mendel strain rats; 180-200 g | female | oral; stomach tube | cmpd in corn oil | toxicity symptoms: muscle fibrillation, red colored lacrimation, diarrhea, dyspnea, convulsions; respiratory paralysis, anoxia, terminal convulsion | rats fasted for 24 hours; LD50 value was used in Lehman 1951 | NA | Frawley JP, Hagan EC, Fitzhugh OG. 1952. A comparative pharmacological and toxicological study of organic phosphate-anticholinesterase compounnds. J Pharmacol Exp Ther 152:156-165. *U.S. FDA, Washington, D.C.* |
| Parathion | 2 | 3.6 | 3.2 - 4.0 (95% CL) | Litchfield and Wilcoxin method (1949) | Sherman strain rats; min. wt. = 200 g; min. age of 90 days | female | oral; stomach tube | chemical in peanut oil; 0.005 mL/g of bw | observed hourly on first day of dosage and twice a day thereafter until time of death; max survival 3 days | 70 rats tested | technical grade | Gaines TB. 1960. The acute toxicity of pesticides to rats. Toxicol Appl Pharmacol 2:88-99. *U.S. Dept. of Health, Education, and Welfare, Savannah, GA*<br>Mattson AM, Spillane JT, Pearce GW. 1955. Dimethyl 2,2-dichlorvinyl phosphate (DDVP), an organic phosphorous compound highly toxic to insects. J Agr Food Chem 3:319-321. *Communicable Disease Center, Savannah, GA* |
| Parathion | 2 | 3.6 | 3.2 - 4.0 (95% CL) | Litchfield and Wilcoxin method (1949) | Sherman albino rats | female | oral; stomach tube | NA | NA | LD50 value from research in Gaines 1960 | NA | Durham WF, Gaines TB, McCauley RH, Sedlak VA, Mattson MA, Hayes WJ. 1957. Studies on the toxicity of 0,0-dimethyl-2,2-dichlorovinyl phosphate (DDVP). AMA Arch Ind Health 15:340-349. *U.S. Dept. of Health, Education and Welfare, Savannah, GA* |
| Parathion | 2 | 4.7 | 3.98 - 5.55 (95% CL; slope = 1.21 [0.98 - 1.50 95% CL]) | Litchfield and Wilcoxin method (1949) | Osborne-Mendel (?) rats | female | oral | 5 dose levels; constant vol. dose of solvent of 5 mL/kg; single dose; cmpd dissolved in corn oil mixture (90% corn oil, 10% N, N-dimethyl formamide) | observed for 24 hours; deaths infrequent after 24 hour; onset of anticholinesterase poisoning syptoms slower with corn oil than DMSO or aqueous | fasted for 20 hours | NA | Weis LR, Orzel RA. 1967. Some comparative toxicologic and pharmacologic effects of dimethyl sulfoxide as a pesticide solvent. Toxicology and Applied Pharmacology 11:546-557. *U.S. FDA, Washington, D.C.* |

**Rat and Mouse Oral LD50 Database**

| Reference Substance | Rat Oral $LD_{50}$[1] mg/kg | Rat Oral $LD_{50}$[2] mg/kg Primary Reference | $LD_{50}$[3] mg/kg (range) Primary Reference | $LD_{50}$ Calculation Method[4] Primary Reference | Animal Information (stock, weight, age) | Gender | Route and/or Method of Exposure | Dose | Observations | Notes | Reference Substance Source | Primary Reference |
|---|---|---|---|---|---|---|---|---|---|---|---|---|
| Parathion | 2 | 6 | 4.6 - 7.8 (95% CL) | Litchfield and Wilcoxin method (1949) | CD (COBS) rats Charles River, France; 120-200 g | female | oral gavage | cmpd dissolved in 1 mL methylene chloride; emulsified in 10% arabic gum solution with Tween 80; dose 5 mL/kg | LD50 determined after 10 days of observation | 5 dose levels; 10 female per dose; 50 rats used | 95+% pure | Pasquet J, Mazuret A, et al. 1976. Acute oral and percutaneous toxicity of phosalone in the rat, in comparison with azinphosmethyl and parathion. Toxicol Appl Pharmacol 37(1):85-92. *Rhone-Poulenc, France* |
| Parathion | 2 | 10 | 8 - 13 (95% CL) | Litchfield and Wilcoxin method (1949) | CD (COBS) rats Charles River, France; 120-200 g | male and female | oral gavage | cmpds dissolved in 1 mL methylene chloride and emulsified in 10% arabic gum solution with Tween 80; dose 5mL/kg | LD50 determined after 10 days of observation | 5 dose levels; 10 male and 10 female per dose; 100 rats used | 95+% pure | Pasquet J, Mazuret A, et al. 1976. Acute oral and percutaneous toxicity of phosalone in the rat, in comparison with azinphosmethyl and parathion. Toxicol Appl Pharmacol 37(1):85-92. *Rhone-Poulenc, France* |
| Parathion | 2 | 13 | 10 - 17 (95% CL) | Litchfield and Wilcoxin method (1949) | Sherman strain rats; min. wt. = 175 g; min. age of 90 days | male | oral; stomach tube | chemical in peanut oil; 0.005 mL/g of bw | observed hourly on first day of dosage and twice a day thereafter until time of death; max survival 3 days | 50 rats tested | technical grade | Gaines TB. 1960. The acute toxicity of pesticides to rats. Toxicol Appl Pharmacol 2:88-99. *U.S. Dept. of Health, Education, and Welfare, Savannah, GA*<br><br>Mattson AM, Spillane JT, Pearce GW. 1955. Dimethyl 2,2-dichlorvinyl phosphate (DDVP), an organic phosphorous compound highly toxic to insects. J Agr Food Chem 3:319-321. *Communicable Disease Center, Savannah, GA* |
| Parathion | 2 | 15 | 10.2 - 16.5 (95% CL) | Litchfield and Wilcoxin method (1949) | Sherman albino rats | male | oral; stomach tube | NA | NA | LD50 value from research in Gaines 1960 | NA | Durham WF, Gaines TB, McCauley RH, Sedlak VA, Mattson MA, Hayes WJ. 1957. Studies on the toxicity of 0,0-dimethyl-2,2-dichlorovinyl phosphate (DDVP). AMA Arch Ind Health 15:340-349. *U.S. Dept. of Health, Education and Welfare, Savannah, GA* |
| Parathion | 2 | 16 | 13 - 20 (95% CL) | Litchfield and Wilcoxin method (1949) | CD (COBS) rats Charles River, France; 120-200 g | male | oral gavage | cmpds dissolved in 1 mL methylene chloride and emulsified in 10% arabic gum solution with Tween 80; dose 5 mL/kg | LD50 determined after 10 days of observation | 5 dose levels; 10 male per dose; 50 rats used | 95+% pure | Pasquet J, Mazuret A, et al. 1976. Acute oral and percutaneous toxicity of phosalone in the rat, in comparison with azinphosmethyl and parathion. Toxicol Appl Pharmacol 37(1):85-92. *Rhone-Poulenc, France* |
| Parathion | 2 | 30 | +/- 3.6 (S.E.) | Litchfield and Fertig (1941) | Osborne-Mendel strain rats; 180 - 200 g | male | oral; stomach tube | cmpd in corn oil | toxicity symptoms: muscle fibrillation, red colored lacrimation, diarrhea, dyspnea, convulsions; respiratory paralysis, anoxia, terminal convulsion | rats fasted for 24 hours; | NA | Frawley JP, Hagan EC, Fitzhugh OG. 1952. A comparative pharmacological and toxicological study of organic phosphate-anticholinesterase compounnds. J Pharmacol Exp Ther 152:156-165. *U.S. FDA, Washington, D.C.* |
| Phenobarbital | 162 | 162 | +/- 14 | NA | Wistar rats; adult | NA | oral | NA | NA | information from: drug applications from pharmaceutical manufacturers, the literature, and FDA labs | NA | Goldenthal EI. 1971. A compilation of LD50 values in newborn and adult animals. Toxicology and Applied Pharamacology 18:185-207. *Bureau of Drugs, Food and Drug Administration, Dept. of Health, Education, and Welfare, Rockville, MD.* **(RTECS REFERENCE)** |
| Phenobarbital | 162 | 220 | NA | NA | MJ rats; 80 - 100 days | NA | oral | NA | NA | information from: drug applications from pharmaceutical manufacturers, the literature, and FDA labs | NA | Goldenthal EI. 1971. A compilation of LD50 values in newborn and adult animals. Toxicology and Applied Pharamacology 18:185-207. *Bureau of Drugs, Food and Drug Administration, Dept. of Health, Education, and Welfare, Rockville, MD.* |
| Phenobarbital | 162 | 318 | +/- 23 (S.E.) | Miller and Tainter (1944) | Charles River CD and Sprague-Dawley rat strains; > 100 g; adult | NA | oral intubation; up to 50 mL/kg | NA | rats observed for 7 days; observed up to 14 days when heavy metals or other cmpds that produce latent death were investigated | fasted overnight | NA | Yeary RA, Benish RA, Finkelstein M. 1966. Acute Toxicity of Drugs in Newborn Animals. Journal of Pediatrics 69 (4):663-667. *Dept. of Veterinary Preventive Medicine, Ohio State University, Columbus, OH* |
| Phenol | 317 | 317 (0.30 cc/kg of drug lethal to 50% of rats; density = 1.055) | NA | graphically | white rats | NA | oral; stomach tube | 5% ethylene glycol added to phenol to liquify it so that it would pass through the stomach tube | most rats died within 2 - 6 hour; practically all dead within 8 - 12 hour; convulsions began several minutes after dosing and continued for several hours | NA | NA | *Gigiena i Sanitariya. (V/O Mezhdunarodnaya Kniga, 113095 Moscow, USSR) V.1- 1936. 1976.*---- Brown HW, Lamson PD. 1935. Oral Toxicity of Ortho-n-alkylphenols to White Rats. Proc Soc Exp Biol Med 32:592-594. **(RTECS REFERENCE)** |
| Phenol | 317 | 340 | NA | NA | Wistar rats; 100- 200 g | male and female | oral | 20% aqueous emulsion 0.3, 0.4, 0.5 g/kg doses | 45 rats used; 30 dead; death within 1 hour; twitching, weak pulse and respiration, salivation, dyspnea | 45 rats used (equal numbers of male and female used) | Merck reagent quality | Deichmann WB, Witherup S. 1944. Phenol Studies VI: the acute and comparative toxicity of phenol and o-, m-, and p-cresols for experimental animals. J of Pharmacol and Exp Therapeutics 80:233-240. *College of Medicine, University of Cincinnati, Cincinnati, OH.* |
| Phenol | 317 | 400 | 297 - 539 (95% CL) | Dixon (1965) and Bruce (1985) | Fischer 344 rats; 77 days old at test | female | oral gavage | in deionized water; maximum volume dose 10mL/kg; 5 dose levels: 0, 12, 40, 120, 224 mg/kg; single dose | 7 day survival time | fasted overnight; initial dose levels were 100, 1000, and 5000 mg/kg; subsequent doses selected by up-and-down method (Bruce, 1985, 1987); 5 groups of 8 rats each; 40 rats used; 7 15 rats used in first LD50 estimate | analytical grad_; 99+% pure; Aldrich Chemical Co. | Berman E, Schlicht M, Moser VC, MacPhail RC. 1995. A multidisciplinary approach to toxicological screening: I. Systemic toxicity. J Toxicol Environ Health 45(2): 127-43. *Health Effects Res. Lab., U.S.EPA, Research Triangle Park, NC* |
| Phenol | 317 | 445 | NA | Probit method | Sprague-Dawley rats; 190-200 g | female | oral | geometric progression of 14 for dosing; in water or neat | 9 dead; observed for 14 days | non-fasted; 4 groups of 5 female; 20 rats used | Polysciences, Inc. Warrington, PA | Thompson ED, Gibson DP. 1984. A method for determining the maximum tolerated dose for acute in vivo cytogenetic studies. Food Chem Toxicol 22(8):665-76. *The Procter and Gamble Co., Cincinnati, OH* |
| Phenol | 317 | 512 | 455 - 568 | NA | rats; 220 +/- 40 g | NA | oral; intragastric | NA | NA | (source of information not provided) | NA | Izmerov NF, Sanotsky IV, Sidorov KK. 1982. Toxicometric Parameters of Industrial Toxic Chemicals under Single Exposure. International Register of Potentially Toxic Chemicals (IRPTC). United Nations Environment Programme (UNEP). Centre of International Projects, GKNT. Moscow, Russia. |
| Phenol | 317 | 520 | NA | Probit method | Sprague-Dawley rats; 190-200 g | male | oral | geometric progression of 14 for dosing; in water or neat | 10 dead; observed for 14 days | non-fasted; 3 groups of 5 male; 1 group of 10 male; 25 rats used | Polysciences, Inc. Warrington, PA | Thompson ED, Gibson DP. 1984. A method for determining the maximum tolerated dose for acute in vivo cytogenetic studies. Food Chem Toxicol 22(8):665-76. *The Procter and Gamble Co., Cincinnati, OH* |

**Rat and Mouse Oral LD50 Database**

| Reference Substance | Rat Oral $LD_{50}$[1] mg/kg | Rat Oral $LD_{50}$[2] mg/kg Primary Reference | $LD_{50}$[3] mg/kg (range) Primary Reference | $LD_{50}$ Calculation Method[4] Primary Reference | Animal Information (stock, weight, age) | Gender | Route and/or Method of Exposure | Dose | Observations | Notes | Reference Substance Source | Primary Reference |
|---|---|---|---|---|---|---|---|---|---|---|---|---|
| Phenol | 317 | 530 | NA | NA | Wistar rats; 100- 200 g | male and female | oral | 2% aqueous solution; 0.4, 0.5, 0.6, 0.7, 0.8 g/kg doses | 45 rats used; 32 dead; death within 3 hours; twitching, weak pulse and respiration, salivation, dyspnea | 45 rats used (equal numbers of male and female used) | Merck reagent quality | Deichmann WB, Witherup S. 1944. Phenol Studies VI: the acute and comparative toxicity of phenol and o-, m-, and p-cresols for experimental animals. J of Pharmacol and Exp Therapeutics 80:233-240. *College of Medicine, University of Cincinnati, Cincinnati, OH.* |
| Phenol | 317 | 530 | NA | NA | Wistar rats; 100- 200 g | male and female | oral | 5% aqueous solution; 0.4, 0.5, 0.6, 0.7 g/kg doses | 45 rats used; 27 dead; death within 80 minutes twitching, weak pulse and respiration, salivation, dyspnea | 45 rats used (equal numbers of male and female used) | Merck reagent quality | Deichmann WB, Witherup S. 1944. Phenol Studies VI: the acute and comparative toxicity of phenol and o-, m-, and p-cresols for experimental animals. J of Pharmacol and Exp Therapeutics 80:233-240. *College of Medicine, University of Cincinnati, Cincinnati, OH.* |
| Phenol | 317 | 540 | NA | NA | Wistar rats; 100- 200 g | male and female | oral | 10% aqueous emulsion 0.5, 0.6, 0.7, 0.8 g/kg doses | 40 rats used; 28 dead; death within 120 minutes; twitching, weak pulse and respiration, salivation, dyspnea | 40 rats used (equal numbers of male and female used) | Merck reagent quality | Deichmann WB, Witherup S. 1944. Phenol Studies VI: the acute and comparative toxicity of phenol and o-, m-, and p-cresols for experimental animals. J of Pharmacol and Exp Therapeutics 80:233-240. *College of Medicine, University of Cincinnati, Cincinnati, OH.* |
| Phenol | 317 | 550 - A<br>530 - B | NA | A= Behrens (1929)<br>B = Bliss (1938) | rats | NA | oral | 2% aqueous solution | NA | 41 - 90 animals used; NICEATM used value B since authors stated it was more accurate | NA | Deichmann WB, Mergard EG. 1948. Comparative evaluation of methods employed to express the degree of toxicity of a cmpd. J Ind Hyg Toxicol 30:373-378. *Albany Medical College, Albany, NY; University of Cincinnati, Cincinnati, OH* |
| Phenol | 317 | 580 - A<br>540 - B | NA | A= Behrens (1929)<br>B = Bliss (1938) | rats | NA | oral | 10% aqueous solution | NA | 42 - 90 animals used; NICEATM used value B since authors stated it was more accurate | NA | Deichmann WB, Mergard EG. 1948. Comparative evaluation of methods employed to express the degree of toxicity of a compound. J Ind Hyg Toxicol 30:373-378. *Albany Medical College, Albany, NY; University of Cincinnati, Cincinnati, OH* |
| Phenol | 317 | 550 - 650 | NA | NA | Normal albino rats | male and female | oral | single doses in mg/kg: 400, 450, 500, 550, 600, 650, 700; phenol as 5% aqueous solution | dose (mg/kg), percent mortality, minutes till death: 400, 10%, 20; 450, 20%, 10 to 80; 500, 30%, 10 to 30; 500, 30%, 10 to 30; 550, 50%, 5 to 90; 600, 60%, 3 to 8; 650, 60%, 4 to 60; 700, 90%, 4 to 50; 500 mg/kg repeated in reference paper | rats divided into 5 test groups and 1 control; 10 rats per group; 80 rats used | NA | Deichmann W, Oesper P. 1940. Ingestion of phenol: effects on the albino rat. Industr Med 9:296-298. |
| Phenol | 317 | 650 | 490 - 860<br>(95% CL) | NA | albino rats | male | oral; stomach intubation | 4 doses: 200, 398, 795, 1580 mg/kg; single dose | observed for 14 days; 9 of 20 rats dead; dose (mg/kg), rats dead: 200 - 0/5; 398 - 0/5; 795 - 4/5 (dead within 1 day after dosing); 1580 - 5/5 (dead < 2 hour after dosing) | 4 groups of 5 rats; 20 rats used; test procedures outlined in the Federal Hazardous Substances Act (FSHA) in the Federeal Register 8/12/61, pages 7333-7341, entitled "Part 191 - Hazardous Sub-stances: Definitions and Procedural and Interpretive Regulations, Final Order" | Fisher Scientific Co. | Flickinger CW. 1976. The benzenediols: catechol, resorcinol and hydroquinone -- a review of the industrial toxicoloogy and current industrial exposure limits. Am Ind Hyg Assoc J 37:596-606. *Koppers Company, Inc., Monroeville, PA* |
| Phenol | 317 | 1030 | 940 - 1120 | NA | albino rats; 90-120 g | male | oral; stomach tube | 5% phenol solution in water; single dose | observed for 14 days; 10 rats dead | non-fasted; 4 groups of 10 rats | rwagent grade | from EPA TSCATS database; Acute Toxicity of Phenol (1949), EPA Document No. 86-870001405 Fiche No. OTS0515567 *Mellon Institute of Industrial research, Univ. of Pittsburgh, Pittsburgh, PA* |
| Phenol | 317 | 1460 - A<br>1500 - B | NA | A= Behrens (1929)<br>B = Bliss (1938) | rats | NA | oral | 10% solution in olive oil | NA | 40 - 90 animals used; NICEATM used value B since authors stated it was more accurate | NA | Deichmann WB, Mergard EG. 1948. Comparative evaluation of methods employed to express the degree of toxicity of a cmpd. J Ind Hyg Toxicol 30:373-378. *Albany Medical College, Albany, NY; University of Cincinnati, Cincinnati, OH* |
| Phenylthiourea | 3 | 3.1 | NA | NA | rats | | oral | NA | NA | value cited from unknown reference | NA | Scheline RR, Smith RL, Williams RT. 1961. The metabolism of arylthioureas -- II. The metabolism of $^{14}$C- and $^{35}$S-labelled 1-phenyl-2-thiourea and its derivatives. Journal of Medicinal and Pharmaceutical Chemistry 4(1):109-134. *University of London, UK* **(RTECS REFERENCE)** |
| Phenylthiourea | 3 | < 21.5 | NA | NA | Fischer rats; 6 weeks | male and female | oral intubation | NA | observed up to 14 days | NA | NA | Carcinogenesis bioassay of environmental chemicals annual progress report NIH-NCI-E-C-72-3252. 5/13/71 -- 8/6/73 and Final report NIH-NCI-E-71-2146. Submitted to The National Cancer Institute, National Institutes of Health, Bethesda, MD. 8/15/73 (revised 8/10/73). *Litton Bionetics, Inc. Bethesda, MD.* |
| Physostigmine (Eserine) | 4.5 | 4.5 | NA | NA | rat | NA | oral | NA | NA | NA | NA | Alisi MA, Brufani M, Cesta MC, Filocamo L, Gostoli G, Lappa S, et al. 1994. U.S. Patent 5,302,593. Aminoalkylcarbamic esters of eseroline suitable for use as cholinesterase activity inhibitors (April 12, 1994). **(RTECS REFERENCE)** |
| Potassium I chloride | 2600 | 2600 | 2330 - 2900 | Bliss method | Wistar rats; 110- 140 g | male | oral gavage | approximately 5 doses; in water or oil solution | 14 day observation period; | reference in Czechoslovakian; intro to reference in English; generally 10 animals per dose; up to 50 rats used | NA | Sbornik Vysledku Toxixologickeho Vysetreni Latek A Pripravku. Marhold, J.V., Institut Pro Vychovu Vedoucien Pracovniku Chemickeho Prumyclu Praha, Czechoslovakia, 1972. **(RTECS REFERENCE)** |
| Potassium I chloride | 2600 | 3020 | +/- 140<br>(S.E.) | Croxton (1953) Least squares linear regression. | Wistar albino rats; adult | female | oral; stomach tube | in distilled water: 0, 2.1, 2.4, 2.7, 3.3, 3.6, and 3.9 g/kg bw doses; volume of 20 mL/kg bw | respiratory failure, convulsions, gastroenteritis, anorexia, polydipsia, polyurea, fever; 14 day observation; death occurred in about half the rats | 109 female rats used; fasted for 16 hours | NA | Boyd EM, Shanas MN. 1961. The Acute Oral Toxicity of Potassium Chloride. Arch Int Pharmacodyn 133:275. *Queen's University, Kingston, Ontario, Canada* |
| Potassium cyanide | 5 | 5 | NA | Rosiello (1979) and Bliss (1938) | rats | male | oral | 2, 4, 9, 14 mg/kg | 2 mg/kg: 0/11 dead; 4 mg/kg:2/11 dead; 9 mg/kg:10/11 dead; 14 mg/kg:11/11 dead; 23 of 44 rats dead; LD50 based on groups containing 3 and 5 rats | acclimated for 5 days; observed for 14 days; 4 groups used for each dose (1, 2, 3, 5 animals per group; total of 11 rats per dose); 9 rats used for initial range finding | NA | Lorke D. 1983. A new approach to practical acute toxicity testing. Arch Toxicol 54(4):275-288. *Institut fur Toxikologie, Wuppertal, Federal Republic of Germany* **(RTECS REFERENCE)** |

**Rat and Mouse Oral LD50 Database**

| Reference Substance | Rat Oral $LD_{50}$[1] mg/kg | Rat Oral $LD_{50}$[2] mg/kg Primary Reference | $LD_{50}$[3] mg/kg (range) Primary Reference | $LD_{50}$ Calculation Method[4] Primary Reference | Animal Information (stock, weight, age) | Gender | Route and/or Method of Exposure | Dose | Observations | Notes | Reference Substance Source | Primary Reference |
|---|---|---|---|---|---|---|---|---|---|---|---|---|
| Potassium cyanide | 5 | 5 | NA | Rosiello (1979) and Bliss (1938) | rats | male | oral | 2, 4, 9, 14 mg/kg | 2 mg/kg: 0/3 dead; 4 mg/kg: 1/3 dead; 9 mg/kg: 3/3 dead; 14 mg/kg: 3/3 dead; 7 of 12 rats dead; LD50 based on 12 rats used; used same rats as experiments using 44 or 20 rats | acclimated for 5 days; observed for 14 days; 4 groups used for each dose (1, 2, 3, 5 animals per group; total of 11 rats per dose); 9 rats used for initial range finding | NA | Lorke D. 1983. A new approach to practical acute toxicity testing. Arch Toxicol 54(4):275-288. *Institut fur Toxikologie, Wuppertal, Federal Republic of Germany* |
| Potassium cyanide | 5 | 5 | NA | Rosiello (1979) and Bliss (1938) | rats | male | oral | 2, 4, 9, 14 mg/kg | 2 mg/kg: 0/5 dead; 4 mg/kg: 1/5 dead; 9 mg/kg: 5/5 dead; 14 mg/kg: 5/5 dead; 11 of 20 rats dead; LD50 based on 20 rats used | acclimated for 5 days; observed for 14 days; 4 groups used for each dose (1, 2, 3, 5 animals per group; total of 11 rats per dose); 9 rats used for initial range finding | NA | Lorke D. 1983. A new approach to practical acute toxicity testing. Arch Toxicol 54(4):275-288. *Institut fur Toxikologie, Wuppertal, Federal Republic of Germany* |
| Potassium cyanide | 5 | 6 | NA | Rosiello (1979) and Bliss (1938) | rats | male | oral | 2, 4, 9, 14 mg/kg | 2 mg/kg: 0/1 dead; 4 mg/kg: 0/1 dead; 9 mg/kg:1/1 dead; 14 mg/kg:1/1 dead; 2 of 4 rats dead; LD50 based on 4 rats used; used same rats as experiments using 44 rats | acclimated for 5 days; observed for 14 days; 4 groups used for each dose (1, 2, 3, 5 animals per group; total of 11 rats per dose); 9 rats used for initial range finding | NA | Lorke D. 1983. A new approach to practical acute toxicity testing. Arch Toxicol 54(4):275-288. *Institut fur Toxikologie, Wuppertal, Federal Republic of Germany* |
| Potassium cyanide | 5 | 6 | NA | Rosiello (1979) and Bliss (1938) | rats | male | oral | 2, 4, 9, 14 mg/kg | 2 mg/kg: 0/11 dead; 4 mg/kg:2/11 dead; 9 mg/kg:10/11 dead; 14 mg/kg:11/11 dead; 23 of 44 rats dead; LD50 based on all rats used (44); summary data from four tests; Test 1 = 4 rats; test 2 = 8 rats; test 3 = 12 rats; test 4 = 20 rats | acclimated for 5 days; observed for 14 days; 4 groups used for each dose (1, 2, 3, 5 animals per group; total of 11 rats per dose); 9 rats used for initial range finding | NA | Lorke D. 1983. A new approach to practical acute toxicity testing. Arch Toxicol 54(4):275-288. *Institut fur Toxikologie, Wuppertal, Federal Republic of Germany* |
| Potassium cyanide | 5 | 7.26 | 6.50 - 8.09 | Bliss-Probit method | Sprague-Dawley rats; 5 weeks | male | oral gavage | dissolved in saline; range (mg/kg) of doses 4.9, 5.8, 7.0, 8.4, 10.1, 12.1 | rats observed at 6 hours after dosing and a once a day for 1-2 weeks; most dead within 3 days; 33/60 rats died; toxic symptoms: decrease in spontaneous movement, abdominal posture, apsychia and hyperventilation within seconds or minutes of all rats dosed with 84 mg/kg or greater; in all dead rats, convulsion due to asphyxia; dose (mg/kg), dead rats per dose: 49-0/10; 58-3/10; 70-5/10; 84-7/10; 101-8/10; 121-10/10 | animals acclimated to environment for 1 week before testing; 6 groups of 10 rats each; fasted 16 hours before dosing; 100% mortality = 12.1 mg/kg; 0% mortality = 4.9 mg/kg | Wako Pure Chemicals Co. | Kitagawa H, Saito H, Sugimoto T, Yanaura S, Kitagawa H, Hosokawa T, Sakamoto K. 1982. Effects of diospropyl-1,3-dithiol-2-ylidene malonate (NKK-105) on acute toxicity of various drugs and heavy metals. J Toxicol Sci 7(2):123-34. *Chiba University; Hoshi College of Pharmacy; Showa University -- Japan* |
| Potassium cyanide | 5 | 9 | NA | Rosiello (1979) and Bliss (1938) | rats | male | oral | 2, 4, 9, 14 mg/kg | 2 mg/kg: 0/2 dead; 4 mg/kg: 0/2 dead; 9 mg/kg: 1/2 dead; 14 mg/kg: 2/2 dead; 3 of 8 rats dead; LD50 based on 8 rats used | acclimated for 5 days; observed for 14 days; 4 groups used for each dose (1, 2, 3, 5 animals per group; total of 11 rats per dose); 9 rats used for initial range finding | NA | Lorke D. 1983. A new approach to practical acute toxicity testing. Arch Toxicol 54(4):275-288. *Institut fur Toxikologie, Wuppertal, Federal Republic of Germany* |
| Potassium cyanide | 5 | 10 | 8.7 - 11.5 (95% CL) | Litchfield and Wilcoxin method (1949) | Sherman strain rats; min. wt. = 175 g; min. age of 90 days | male | oral; stomach tube | chemical in peanut oil; 0.005 mL/g of bw | observed hourly on first day of dosage and twice a day thereafter until time of death; max survival = died within 1 hour | 50 rats tested | technical grade | Gaines TB. 1969. Acute toxicity of pesticides. Toxicol Appl Pharmacol 14(3):515-34. *U.S. Dept. of Health, Education, and Welfare, Atlanta, GA* |
| Potassium cyanide | 5 | 10 | 9 - 12 (95% CL; slope = 14.5) | Finney (1971) | Crl: CD rats; ave bw = 243-251 g; young adult | male | oral; intragastric intubation | single dose as suspension in corn oil (0.1% susp.); 5, 8, 10, 15 mg/kg dose; dose = 126-377 mL | observed for 14 days; 16 rats dead; all deaths occurred within 1 hour; convulsions, tremors, fascilations, gasping, lethargy, weakness, hyperemia, weight loss | 4 groups of 10 rats | NA | from EPA TSCATS database; INITIAL SUBMISSION: ORAL LD50 TEST OF POTASSIUM CYANIDE IN RATS WITH COVER LETTER DATED 08/10/92; EPA Document No. 88-920009041 Fiche No. OTS0555358; *E.I Dupont DeNemours & Co., Inc./Haskell Labs* |
| Procainamide | 1950 | 1950 | NA | NA | rats | NA | oral | NA | NA | no source given for LD50 value | NA | Protiva M, Valenta V, Trcka V, Hladovec J, Nemec J. 1977. Basic amided of 3,4,5-trimethoxyphenoxyacetic acid; synthesis and phaarmacology of trimethoxamide and analogues. Collection of Czechoslovak Chemical Communications 42:3628-3642. *Research Institute for Pharmacy and Biochemistry, Prague, Czechoslovakia* **(RTECS REFERENCE)** |
| Procainamide | 1950 | > 2000 | NA | Litchfield and Wilcoxon method or Thompson method | Wistar rats | male | oral | single dose | NA | 20 rats used | NA | Turba C, Sanna GP, Bianchi C. 1968. 1: Acute toxicity and general pharmacologic properties of 1,5-dimorpholino-3-(1-naphthyl)-pentane: DA 1686. Arzneimittelforschung Sep. 18(9):1127-1132. *LABORATORI RICERCHE ISTITUTO DE ANGLELI, MILANO, ITALY* |
| Propranolol HCl | 466 | 466 | NA | Litchfield and Wilcoxon method | Sprague-Dawley rats; 2 months | male | gastric intubation; single high oral doses | NA | determined at 10 days by administering po to groups of 5 animals for each dose a series of doses increasing serially by a factor of 2 | fasted 12 hour before dosing | pharmaceu-tical grade | Maura A, Carlo P, et al. 1985. Absence of DNA damage in mice and rats given high doses of five beta adrenergic blocking agents. Arzneimittelforschung 35(8):1236-1238. *University of Genova, Italy* **(RTECS REFERENCE)** |
| Propylparaben | 6332 (mouse oral) | 6332 (mouse) | 5740 - 6984 (S.E.) | NA | dd strain mice | NA | oral | NA | NA | NA | NA | Sado I. 1973. Synergistic toxicity of officially permitted food preservatives. Nippon Eiseigaku Zasshi 28(5):463-476. **(RTECS REFERENCE)** |
| Propylparaben | 6332 (mouse oral) | > 8000 (mouse) | NA | Miller and Tainter (1944) | uniform strain of albino mice from a single source | NA | oral | suspended in 3% starch, proplene glycol, or olive oil | rapid onset of ataxia, deep depression resembling anesthesia; deaths usually occurred within 1 hour; recovery from nonfatal doses seldom lasted > 30 minutes | fasted 12 hour prior to dosing | NA | Matthews C, Davidson J, Bauer E, Morrison JL, Richardson AP. 1956. p- Hydroxybenzoic acide esters as preservatives II. Acute and chronic toxicity in dogs, rats, and mice. J Am Pharmaceut Assoc 45:260-267. |
| Sodium arsenite | 41 | 36 | 27 - 52 (95% CL; slope = 7.6 [S.E. 2.7]) | acceptable methods (e.g., Bliss, Litchfield and Wilcoxon, Weil, Thompson, etc.) | Sprague-Dawley rats | male | oral gavage | single dose | 14 day observation; toxicity symptoms: diarrhea, diuresis, posture, respiratory effects, lethargy, abnormal gait; time to onset of signs < 1day; duration of signs 3 days; 9 rats dead (average per test) | 3 dose levels (5 male each); 15 rats used; OECD TG401 (1981) followed for experimental procedures | NA | Vandenheuvel MJ, Clark DG, Fielder RJ, Koundakjian PP, Oliver GJA, Pelling D, Tomlinson NJ, Walker AP. 1990. Jul. The International Validation Of A Fixed-Dose Procedure As An Alternative To The Classical LD50 Test Food And Chemical Toxicology 28(7):469-482. |
| Sodium arsenite | 41 | 41 | 31 - 53 (these limits are +/- 1.96 S.D.) | Thompson method; Weil tables | Carworth-Wistar rats; 90-120 g; 4-5 weeks | male | oral gastric intubation | in aqueous solution; concentration intubated = 10 mg/mL; dosages arranged in a logarithmic series differing by a factor of 2 | LD50 based on mortalities during a 14 day period | non-fasted; groups of 5 rats; single oral dose toxicity | reagent grade | Smyth HF Jr, Carpenter CP, Weil CS, Pozzani UC, Striegel JA, Nycum, JS. 1969. Range-finding toxicity data: List VII. Am Ind Hyg Assoc J 30: 470-476. *Carnegie-Mellon University, Pittsburgh, PA (LD50 value)* **(RTECS REFERENCE)**<br><br>Smyth HF Jr, Carpenter CP, Weil CS, Pozzani UC, Striegel JA. 1962. Range-finding toxicity data: List VI. Am Ind Hyg Assoc J 23:95-107. *Mellon Institute of Industrial Research, Pittsburg, PA (experimental parameters)* |

**Rat and Mouse Oral LD50 Database**

| Reference Substance | Rat Oral $LD_{50}$[1] mg/kg | Rat Oral $LD_{50}$[2] mg/kg Primary Reference | $LD_{50}$[3] mg/kg (range) Primary Reference | $LD_{50}$ Calculation Method[4] Primary Reference | Animal Information (stock, weight, age) | Gender | Route and/or Method of Exposure | Dose | Observations | Notes | Reference Substance Source | Primary Reference |
|---|---|---|---|---|---|---|---|---|---|---|---|---|
| Sodium arsenite | 41 | 42 | 35 - 50 (95% CL) | Litchfield and Wilcoxon method | Holtsman rats; 300- 500 g; 100-300 days (13 - 41 weeks) | male and female | oral, gelatin capsules | 20, 50, 100, 200 (all in mg/kg) | death occurred within 4 days | approximately 40 rats used; 24 hour fasting before dosing; rats dosed under light anesthesia | Baker Analyzed Reagent with 0.02% impurities | Done AK, Peart AJ. 1971. Acute Toxicities of Arsenical Herbicides. Cinical Toxicology, 4(3):343-355. *University of Utah, Salt Lake City, UT* |
| Sodium arsenite | 41 | 42 | 35 - 58 (95% CL) | acceptable methods (e.g., Bliss, Litchfield and Wilcoxon, Weil, Thompson, etc.) | Sprague-Dawley rats | male and female | oral gavage | single dose | 14 day observation; toxicity symptoms: diarrhea, diuresis, posture, respiratory effects, lethargy, abnormal gait; time to onset of signs < 1 day; duration of signs 3 days; 9 rats dead (average per test) | 3 dose levels (5 male each and 5 female); 30 rats used; OECD TG401 (1981) followed for experimental procedures | NA | Vandenheuvel MJ, Clark DG, Fielder RJ, Koundakjian PP, Oliver GJA, Pelling D, Tomlinson NJ, Walker AP. 1990. Jul. The International Validation Of A Fixed-Dose Procedure As An Alternative To The Classical LD50 Test Food And Chemical Toxicology 28(7):469-482. |
| Sodium arsenite | 41 | 48 | 37 - 76 (95% CL) | acceptable methods (e.g., Bliss, Litchfield and Wilcoxon, Weil, Thompson, etc.) | Sprague-Dawley rats | female | oral gavage | single dose | 14 day observation; toxicity symptoms: diarrhea, diuresis, posture, respiratory effects, lethargy, abnormal gait; time to onset of signs < 1 day; duration of signs 3 days; 9 rats dead (average per test) | 3 dose levels (5 female each); 15 rats used; OECD TG401 (1981) followed for experimental procedures | NA | Vandenheuvel MJ, Clark DG, Fielder RJ, Koundakjian PP, Oliver GJA, Pelling D, Tomlinson NJ, Walker AP. 1990. Jul. The International Validation Of A Fixed-Dose Procedure As An Alternative To The Classical LD50 Test Food And Chemical Toxicology 28(7):469-482. |
| Sodium arsenite | 41 | 53 | 39 - 74 (95% CL) | acceptable methods (e.g., Bliss, Litchfield and Wilcoxon, Weil, Thompson, etc.) | Sprague-Dawley rats; 190-300 g | female | oral gavage | single dose | 14 day observation; toxicity symptoms: motor activity decrease, respiratory effects, blanching, piloerection, salivation, diarrhea; time to onset of signs < 1 day; duration of signs 3 days; animals fasted 16 -20 hours before administration | UDP Test | NA | Yam J, Reer PJ, Bruce RD. 1991. Comparison of the up-and-down method and the fixed-dose procedure for acute oral toxicity testing. Food Chem Toxicol 29(4):259-264. *The Procter and Gamble Co., Cincinnati, OH* |
| Sodium chloride | 3000 | 3000 | NA | NA | rats | NA | oral | NA | NA | No information/reference provided. | NA | Tucker RK, Haegel MA. 1971. Compararive acute oral toxicity of pesticides to six species of birds. Toxicology and Applied Pharmacology 20:57-65. **(RTECS REFERENCE)** |
| Sodium chloride | 3000 | 3620 | +/-300 (S.E.) | Croxton (1953) and Waugh (1952) | Wistar albino rats; female: 167+/-27 g; young adult | female | oral; intragastric tube | doses = 0, 0.8, 3, 3.2, 3.5, 3.8, 4, 5, 10, 16 g/kg in water; 20 mL/kg dose; 2 largest doses in larger volumes | convulsive movements, diarrhea, muscular rigidity, prostration, respiratory failure; death within 14 hours | fasted for 16 hours; 84 rats used; 12 - 44 rats per dose | NA | Boyd EM, Shanas MN. 1963. The acute oral toxicity of sodium chloride. Arch Internat Pharmacodyn 144:86-96. *Quebecs' University, Kingston, Ontario, Canada* |
| Sodium chloride | 3000 | 3750 | +/-430 (S.E.) | Croxton (1953) and Waugh (1952) | Wistar albino rats; male: 202+/-42 g; female: 167+/-27 g; young adult | male and female (equal numbers) | oral; intragastric tube | doses = 0, 0.8, 3, 3.2, 3.5, 3.8, 4, 5, 10, 16 g/kg in water; 20 mL/kg dose; 2 largest doses in larger volumes | convulsive movements, diarrhea, muscular rigidity, prostration, respiratory failure; death within 14 hours | fasted for 16 hours; 168 rats used; equal numbers of male and female; 12-44 rats per dose; this LD50 is determined from the data used to determine LD50 of 3620 mg/kg (female) and 3890 mg/kg (male) also reported in this reference [Boyd and Shanas 1963] | NA | Boyd EM, Shanas MN. 1963. The acute oral toxicity of sodium chloride. Arch Internat Pharmacodyn 144:86-96. *Quebecs' University, Kingston, Ontario, Canada* |
| Sodium chloride | 3000 | 3890 | +/-300 (S.E.) | Croxton (1953) and Waugh (1952) | Wistar albino rats; male: 202+/-42 g; young adult | male | oral; intragastric tube | doses = 0, 0.8, 3, 3.2, 3.5, 3.8, 4, 5, 10, 16 g/kg in water; 20 mL/kg dose; 2 largest doses in larger volumes | convulsive movements, diarrhea, muscular rigidity, prostration, respiratory failure; death within 14 hours | fasted for 16 hours; 84 rats used; 12 - 44 rats per dose | NA | Boyd EM, Shanas MN. 1963. The acute oral toxicity of sodium chloride. Arch Internat Pharmacodyn 144:86-96. *Quebecs' University, Kingston, Ontario, Canada* |
| Sodium chloride | 3000 | 4200 | 3980 - 4430 (95% CL) | Litchfield and Wilcoxon method (1949) | rats | NA | oral | NA | NA | reference in Italian | NA | Scognamiglio WP, Amorico L, Gatti GL. 1972. Esperienze di tossicita e di tolleranza al monosioglutammato con un saggio di condizionamento di salvaguardia. Il Farmaco Edizone Pratica 27:19-27. |
| Sodium chloride | 3000 | 6140 | +/-310 (S.E.) | NA | CBL Wistar albino rats; 150-200 g | male | oral; intragastric tube | single dose; 5000 - 7500 mg/kg dose range; cmpd dissolved in distilled water; 20 mL/kg dosage | observed for 5 days; premortal diarrhea; convulsive movements | 5 rats per dose; 30 rats used; rats not fasted | Merck Reagent | Boyd EM, Abel MM, Knight LM. 1966. The chronic oral toxicity of sodium chloride at the range of the LD50 (0.1L). Canad J Physiol Pharmacol 44:157-172. *Queen's University, Ontario, Canada* |
| Sodium dichromate (Sodium bichromate VI) | 50 | 34.17 | +/- 20.95 (S.D.) | Gad and Weil (1982) Probit analysis | Fischer 344 rats (Harlen Sprague Dawley) | female | oral gavage | single dose: 40,60,80 mg/kg; dosing solution: 10,5,1,0.5% (w/v); dosing vol: 0.4-8.0 mL/kg (40 mg/kg); 0.6-12 mL/kg (60 mg/kl); 0.8-16 mL/kg (80 mg/kg); doses in distilled water; 10% dose | observed first 6 hours then day 1, 7 and 14; hypoactivity, lacrimation, mydriasis, diarrhea, change in body weight; LD50 increased as the concentration of the dosing solution increased | animals acclimated for 2 weeks before dosing; animals fasted overnight; 5 animals used | member companies of the Industrial Health Foundation | Gad SC, Powers WJ, Dunn BJ, Hoffman GM, Siino KM, Walsh RD. 1986. Acute toxicity of four chromate salts. Proceedings of the Chromium Symposium, pp. 43-58. *G.D. Searle and Co., Skokie, IL* |
| Sodium dichromate (Sodium bichromate VI) | 50 | 38.55 | +/- 7.79 (S.D.) | Gad and Weil (1982) Probit analysis | Fischer 344 rats (Harlen Sprague Dawley) | female | oral gavage | single dose: 40,60,80 mg/kg; dosing solution: 10,5,1,0.5% (w/v); dosing vol: 0.4-8.0 mL/kg (40 mg/kg); 0.6-12 mL/kg (60 mg/kl); 0.8-16 mL/kg (80 mg/kg); doses in distilled water; 5% dose | observed first 6 hours then day 1, 7 and 14; hypoactivity, lacrimation, mydriasis, diarrhea, change in body weight; LD50 increased as the concentration of the dosing solution increased | animals acclimated for 2 weeks before dosing; animals fasted overnight; 5 animals/dose | member companies of the Industrial Health Foundation | Gad SC, Powers WJ, Dunn BJ, Hoffman GM, Siino KM, Walsh RD. 1986. Acute toxicity of four chromate salts. Proceedings of the Chromium Symposium, pp. 43-58. *G.D. Searle and Co., Skokie, IL* |
| Sodium dichromate (Sodium bichromate VI) | 50 | 39.02 | +/- 13.54 (S.D.) | Gad and Weil (1982) Probit analysis | Fischer 344 rats (Harlen Sprague Dawley) | female | oral gavage | single dose: 40, 50, 60, 80, 100 mg/kg; dosing solution 50% (w/v); 0.8-2.0 mL/kg dosing volume; doses in distilled water | observed first 6 hours then day 1, 7 and 14; hypoactivity, lacrimation, mydriasis, diarrhea, change in body weight; LD50 increased as the concentration of the dosing solution increased | animals acclimated for 2 weeks before dosing; animals fasted overnight; 5 male and 5 female rats per dose; 10 rats/dose; 5 female rats/dose for this value | member companies of the Industrial Health Foundation | Gad SC, Powers WJ, Dunn BJ, Hoffman GM, Siino KM, Walsh RD. 1986. Acute toxicity of four chromate salts. Proceedings of the Chromium Symposium, pp. 43-58. *G.D. Searle and Co., Skokie, IL* |

**Rat and Mouse Oral LD50 Database**

| Reference Substance | Rat Oral $LD_{50}$[1] mg/kg | Rat Oral $LD_{50}$[2] mg/kg Primary Reference | $LD_{50}$[3] mg/kg (range) Primary Reference | $LD_{50}$ Calculation Method[4] Primary Reference | Animal Information (stock, weight, age) | Gender | Route and/or Method of Exposure | Dose | Observations | Notes | Reference Substance Source | Primary Reference |
|---|---|---|---|---|---|---|---|---|---|---|---|---|
| Sodium dichromate (Sodium bichromate VI) | 50 | 48.98 | +/- 10.50 (S.D.) | Gad and Weil (1982) Probit analysis | Fischer 344 rats (Harlen Sprague Dawley) | male | oral gavage | single dose: 40,60,80 mg/kg; dosing solution: 10,5,1,0.5% (w/v); dosing vol: 0.4-8.0 mL/kg (40 mg/kg); 0.6-12 mL/kg (60 mg/kl); 0.8-16 mL/kg (80 mg/kg); doses in distilled water; 10% dose | observed first 6 hours then day 1, 7 and 14; hypoactivity, lacrimation, mydriasis, diarrhea, change in body weight; LD50 increased as the concentration of the dosing solution increased | animals acclimated for 2 weeks before dosing; animals fasted overnight; 5 animals/dose | member companies of the Industrial Health Foundation | Gad SC, Powers WJ, Dunn BJ, Hoffman GM, Siino KM, Walsh RD. 1986. Acute toxicity of four chromate salts. Proceedings of the Chromium Symposium, pp. 43-58. *G.D. Searle and Co., Skokie, IL* |
| Sodium dichromate (Sodium bichromate VI) | 50 | 50 | NA | NA | rats | NA | NA | NA | NA | reference in Russian | NA | Gigiena Truda i Professional'nye Zabolevaniya. Labor Hygiene and Occupational Diseases. (V/O Mezhdunarodnaya Kniga, 113095 Moscow, USSR) V.1-36, 1957-1992. 1978. **(RTECS REFERENCE)** |
| Sodium dichromate (Sodium bichromate VI) | 50 | 51.1 | +/- 5.93 (S.D.) | Gad and Weil (1982) Probit analysis | Fischer 344 rats (Harlen Sprague Dawley) | male and female | oral gavage | single dose: 40, 50, 60, 80, 100 mg/kg; dosing solution 50% (w/v); 0.8-20 mL/kg dosing volume; doses in distilled water | observed first 6 hours then day 1, 7 and 14; hypoactivity, lacrimation, mydriasis, diarrhea, change in body weight; LD50 increased as the concentration of the dosing solution increased | animals acclimated for 2 weeks before dosing; animals fasted overnight; 5 male and 5 female rats per dose; 10 rats/dose; this LD50 is determined from the data used to determine LD50 of 39.02 mg/kg (female) and 58.84 mg/kg (male) also reported in this reference | member companies of the Industrial Health Foundation | Gad SC, Powers WJ, Dunn BJ, Hoffman GM, Siino KM, Walsh RD. 1986. Acute toxicity of four chromate salts. Proceedings of the Chromium Symposium, pp. 43-58. *G.D. Searle and Co., Skokie, IL* |
| Sodium dichromate (Sodium bichromate VI) | 50 | 55.75 | +/- 15.98 (S.D.) | Gad and Weil (1982) Probit analysis | Fischer 344 rats (Harlen Sprague Dawley) | male | oral gavage | single dose: 40,60,80 mg/kg; dosing solution: 10,5,1,0.5% (w/v); dosing vol: 0.4-8.0 mL/kg (40 mg/kg); 0.6-12 mL/kg (60 mg/kl); 0.8-16 mL/kg (80 mg/kg); doses in distilled water; 5% dose | observed first 6 hours then day 1, 7 and 14; hypoactivity, lacrimation, mydriasis, diarrhea, change in body weight; LD50 increased as the concentration of the dosing solution increased | animals acclimated for 2 weeks before dosing; animals fasted overnight; 5 animals/dose | member companies of the Industrial Health Foundation | Gad SC, Powers WJ, Dunn BJ, Hoffman GM, Siino KM, Walsh RD. 1986. Acute toxicity of four chromate salts. Proceedings of the Chromium Symposium, pp. 43-58. *G.D. Searle and Co., Skokie, IL* |
| Sodium dichromate (Sodium bichromate VI) | 50 | 57.13 | +/- 8.81 (S.D.) | Gad and Weil (1982) Probit analysis | Fischer 344 rats (Harlen Sprague Dawley) | female | oral gavage | single dose: 40,60,80 mg/kg; dosing solution: 10,5,1,0.5% (w/v); dosing vol: 0.4-8.0 mL/kg (40 mg/kg); 0.6-12 mL/kg (60 mg/kl); 0.8-16 mL/kg (80 mg/kg); doses in distilled water; 0.5% dose | observed first 6 hours then day 1, 7 and 14; hypoactivity, lacrimation, mydriasis, diarrhea, change in body weight; LD50 increased as the concentration of the dosing solution increased | animals acclimated for 2 weeks before dosing; animals fasted overnight; 5 animals/dose | member companies of the Industrial Health Foundation | Gad SC, Powers WJ, Dunn BJ, Hoffman GM, Siino KM, Walsh RD. 1986. Acute toxicity of four chromate salts. Proceedings of the Chromium Symposium, pp. 43-58. *G.D. Searle and Co., Skokie, IL* |
| Sodium dichromate (Sodium bichromate VI) | 50 | 58.84 | +/- 5.78 (S.D.) | Gad and Weil (1982) Probit analysis | Fischer 344 rats (Harlen Sprague Dawley) | male | oral gavage | single dose: 40, 50, 60, 80, 100 mg/kg; dosing solution 50% (w/v); 0.8-20 mL/kg dosing volume; doses in distilled water | observed first 6 hours then day 1, 7 and 14; hypoactivity, lacrimation, mydriasis, diarrhea, change in body weight; LD50 increased as the concentration of the dosing solution increased | animals acclimated for 2 weeks before dosing; animals fasted overnight; 5 male and 5 female rats per dose; 10 rats/dose; 5 male rats/dose for this value | member companies of the Industrial Health Foundation | Gad SC, Powers WJ, Dunn BJ, Hoffman GM, Siino KM, Walsh RD. 1986. Acute toxicity of four chromate salts. Proceedings of the Chromium Symposium, pp. 43-58. *G.D. Searle and Co., Skokie, IL* |
| Sodium dichromate (Sodium bichromate VI) | 50 | 59.84 | +/- 7.74 (S.D.) | Gad and Weil (1982) Probit analysis | Fischer 344 rats (Harlen Sprague Dawley) | male | oral gavage | single dose: 40,60,80 mg/kg; dosing solution: 10,5,1,0.5% (w/v); dosing vol: 0.4-8.0 mL/kg (40 mg/kg); 0.6-12 mL/kg (60 mg/kl); 0.8-16 mL/kg (80 mg/kg); doses in distilled water; 0.5% dose | observed first 6 hours then day 1, 7 and 14; hypoactivity, lacrimation, mydriasis, diarrhea, change in body weight; LD50 increased as the concentration of the dosing solution increased | animals acclimated for 2 weeks before dosing; animals fasted overnight; 5 animals/dose | member companies of the Industrial Health Foundation | Gad SC, Powers WJ, Dunn BJ, Hoffman GM, Siino KM, Walsh RD. 1986. Acute toxicity of four chromate salts. Proceedings of the Chromium Symposium, pp. 43-58. *G.D. Searle and Co., Skokie, IL* |
| Sodium dichromate (Sodium bichromate VI) | 50 | 59.84 | +/- 7.74 (S.D.) | Gad and Weil (1982) Probit analysis | Fischer 344 rats (Harlen Sprague Dawley) | male | oral gavage | single dose: 40,60,80 mg/kg; dosing solution: 10,5,1,0.5% (w/v); dosing vol: 0.4-8.0 mL/kg (40 mg/kg); 0.6-12 mL/kg (60 mg/kl); 0.8-16 mL/kg (80 mg/kg); doses in distilled water; 1% dose | observed first 6 hours then day 1, 7 and 14; hypoactivity, lacrimation, mydriasis, diarrhea, change in body weight; LD50 increased as the concentration of the dosing solution increased | animals acclimated for 2 weeks before dosing; animals fasted overnight; 5 animals/dose | member companies of the Industrial Health Foundation | Gad SC, Powers WJ, Dunn BJ, Hoffman GM, Siino KM, Walsh RD. 1986. Acute toxicity of four chromate salts. Proceedings of the Chromium Symposium, pp. 43-58. *G.D. Searle and Co., Skokie, IL* |
| Sodium Dichromate (Sodium Bichromate VI) | 50 | 64.5 | +/- 10.18 (S.D.) | Gad and Weil (1982) Probit analysis | Fischer 344 rats (Harlen Sprague Dawley) | female | oral gavage | single dose: 40,60,80 mg/kg; dosing solution: 10,5,1,0.5% (w/v); dosing vol: 0.4-8.0 mL/kg (40 mg/kg); 0.6-12 mL/kg (60 mg/kl); 0.8-16 mL/kg (80 mg/kg); doses in distilled water; 1% dose | observed first 6 hours then day 1, 7 and 14; hypoactivity, lacrimation, mydriasis, diarrhea, change in body weight; LD50 increased as the concentration of the dosing solution increased | animals acclimated for 2 weeks before dosing; animals fasted overnight; 5 animals/dose | member companies of the Industrial Health Foundation | Gad SC, Powers WJ, Dunn BJ, Hoffman GM, Siino KM, Walsh RD. 1986. Acute toxicity of four chromate salts. Proceedings of the Chromium Symposium, pp. 43-58. *G.D. Searle and Co., Skokie, IL* |
| Sodium hypochlorite | 8910 (from HSDB) | 8200 | NA | NA | NA | NA | NA | NA | NA | 12.5% hypochlorite solution | NA | Sodium Hypochlorite Toxicity Profile. 1990. British Industrial Biological Research Association (BIBRA). |
| Sodium hypochlorite | 8910 (from HSDB) | 9360 - 11700 | NA | NA | NA | NA | NA | NA | NA | 12.5% hypochlorite solution | NA | Colgate-Palmolive. 1990. Internal Report: Investigation of the properties of the wash water in connection with washing using "Klorin" bleach. Unpublished. |
| Sodium hypochlorite | 8910 (from HSDB) | >11800 | NA | NA | NA | NA | NA | NA | NA | 3.6% hypochlorite solution | NA | Colgate-Palmolive. 1990. Internal Report: Investigation of the properties of the wash water in connection with washing using "Klorin" bleach. Unpublished. |

**Rat and Mouse Oral LD50 Database**

| Reference Substance | Rat Oral $LD_{50}$[1] mg/kg | Rat Oral $LD_{50}$[2] mg/kg Primary Reference | $LD_{50}$[3] mg/kg (range) Primary Reference | $LD_{50}$ Calculation Method[4] Primary Reference | Animal Information (stock, weight, age) | Gender | Route and/or Method of Exposure | Dose | Observations | Notes | Reference Substance Source | Primary Reference |
|---|---|---|---|---|---|---|---|---|---|---|---|---|
| Sodium hypochlorite | 8910 (from HSDB) | 13000 | NA | NA | NA | NA | NA | NA | NA | 5.25% hypochlorite solution | NA | MSDS Chlorine Institute 1982 |
| Sodium I fluoride | 115 | 64 (29 mg F/kg; converted to mg NaF/kg) | 60 - 69 (95% CI) | Litchfield and Wilcoxon method (1949); Bliss (1938) | rats; mean bw = 169 g; 3 months | female | oral | 5 mL/kg | 22 rats died within 3 hour; 15 rats died after 3 hour; observed for 7 days; signs of toxicity appeared from 5-15 minutes after administration of NaF: muscle weakness, salivation, diarrhea, lacrimation, tremor, convulsion, hypopnea, cynosis, urinary incontinence; most animals died within 24 hour after dosing | reference paprer in Japanese; English summary and table/graph headers; see paper for information about regression coefficient of log dose-NED mortality curve | NA | Sakama H. 1980. Toxicological studies of fluorine compounds. I. Acute toxicity of sodium fluoride to rats and mice in relation to age, sex, animal genus, and administration route. Shika Gakuho. Journal of Dentistry. 80: 1519. *Tokyo Dental College, Japan.* |
| Sodium I fluoride | 115 | 69 (31 mg F/kg; converted to mg NaF/kg) | 55 - 84 (CL) | Litchfield and Wilcoxon method (1949) | Sprague-Dawley rats; mean bw and ranges 250 g (200-359 g); 90 days | female | stomach tube | NaF in aqueous solution (0.2 - 1.6 mL/dose) | mortality confined to 24 hour; when doses equal to or greater than the LD50 were administered, half of the 250 g rats died within 3 hours | fasted 24 hour before dosing; at least seven dose levels used for each population; groups of 8 -15 rats | NA | DeLopez OH, Smith FA, Hodge HC. 1976. Plasma fluoride concentrations in rats acutely poisoned with sodium fluoride. Toxicol Appl Pharmacol 37:75-83. *Univ. of Rochester School of Med. And Dent., Rochester, NY* |
| Sodium I fluoride | 115 | 73 (33 mg F/kg; converted to mg NaF/kg) | 66 - 80 (95% CI) | Litchfield and Wilcoxon method (1949); Bliss (1938) | rats; mean bw = 295 g; 3 months | male | oral | 3 mL/kg | 6 rats died within 3 hour; 35 rats died after 3 hour; observed for 7 days; signs of toxicity appeared from 5-15 minutes after administration of NaF: muscle weakness, salivation, diarrhea, lacrimation, tremor, convulsion, hypopnea, cynosis, urinary incontinence; most animals died within 24 hour after dosing | reference paprer in Japanese; English summary and table/graph headers; see paper for information about regression coefficient of log dose-NED mortality curve | NA | Sakama H. 1980. Toxicological studies of fluorine compounds. I. Acute toxicity of sodium fluoride to rats and mice in relation to age, sex, animal genus, and administration route. Shika Gakuho. Journal of Dentistry. 80: 1519. *Tokyo Dental College, Japan.* |
| Sodium I fluoride | 115 | 80 | +/- 5 (S.E.) | Winthrop logarithmic probit graph paper; Miller and Tainter (1944) | Albino rats; 200- 300 g | NA | oral; stomach tube | single dose; 25% solution; 22 - 288 mg/kg doses; | percentage mortality observed in 24 hour calculated, then LD50 determined | 98 rats used | NA | Shourie KL, Hein JW, Hodge HC. 1950. Preliminary studies of the caries inhibiting potential and acute toxicity of sodium monofluorophosphate. J Dent Res 29:529-533. *Univeristy of Rochester, School of Medicine and Denistry, Rochester, NY.* |
| Sodium I fluoride | 115 | 84 (38 mg F/kg; converted to mg NaF/kg) | 77 - 93 (95% CI) | Litchfield and Wilcoxon method (1949); Bliss (1938) | rats; mean bw = 60 g; 3 weeks | female | oral | 5 mL/kg | 16 rats died within 3 hour; 32 rats died after 3 hour; observed for 7 days; signs of toxicity appeared from 5-15 minutes after administration of NaF: muscle weakness, salivation, diarrhea, lacrimation, tremor, convulsion, hypopnea, cynosis, urinary incontinence; most animals died within 24 hour after dosing | reference paprer in Japanese; English summary and table/graph headers; see paper for information about regression coefficient of log dose-NED mortality curve. | NA | Sakama H. 1980. Toxicological studies of fluorine compounds. I. Acute toxicity of sodium fluoride to rats and mice in relation to age, sex, animal genus, and administration route. Shika Gakuho. Journal of Dentistry. 80: 1519. *Tokyo Dental College, Japan.* |
| Sodium I fluoride | 115 | 107 (46 mg F/kg; converted to mg NaF/kg) | 95 - 110 (95% CI) | Litchfield and Wilcoxon method (1949); Bliss (1938) | rats; mean bw = 58 g; 3 weeks | male | oral | 5 mL/kg | 2 rats died within 3 hour; 32 rats died after 3 hour; observed for 7 days; signs of toxicity appeared from 5-15 minutes after administration of NaF: muscle weakness, salivation, diarrhea, lacrimation, tremor convulsion, hypopnea, cynosis, urinary incontinence; most animals died within 24 hour after dosing | reference paprer in Japanese; English summary and table/graph headers; see paper for information about regression coefficient of log dose-NED mortality curve. | NA | Sakama H. 1980. Toxicological studies of fluorine compounds. I. Acute toxicity of sodium fluoride to rats and mice in relation to age, sex, animal genus, and administration route. Shika Gakuho. Journal of Dentistry. 80: 1519. *Tokyo Dental College, Japan.* |
| Sodium I fluoride | 115 | 115 (52 mg F/kg; converted to mg NaF/kg) | 106 - 126 (slope = 1.23 [1.06 - 1.43]; 95% CL) | Litchfield and Wilcoxin method (1949) | Sprague-Dawley rats; mean bw and ranges 150 g (112-184 g); 30-45 days | female | stomach tube | NaF in aqueous solution (0.2 - 1.6 mL/dose); 30 - 100 mg F/kg doses; | mortality confined to 24 hour; when doses > the LD50 were administered, one-third of the 150 g rats died within 7 hours; dose in mg F/kg and 24 hour mortality: 75-2/2 dead; 70-9/10 dead; 65-7/9 dead; 62-6/8 dead; 58-4/10 dead; 55-9/15 dead; 50-8/12 dead; 45-3/10 dead; 42-2/10 dead; 40-0/2 dead; 35-0/2 dead; salivation, diarrhea, thirst, lethargy | fasted 24 hour before dosing; 11 dose levels used; groups of 2 -15 rats; 90 rats used; 50 dead; detailed information from RTECS reference (master thesis for de Lopez 1970) | NA | DeLopez OH, Smith FA, Hodge HC. 1976. Plasma fluoride concentrations in rats acutely poisoned with sodium fluoride. Toxicol Appl Pharmacol 37:75-83. *Univ. of Rochester School of Med. And Dent., Rochester, NY* |
| Sodium I fluoride | 115 | 115 (52 mg F/kg; converted to mg NaF/kg) | 108 - 119 (slope = 1.28 [1.0 - 1.6]; 95% CL) | Litchfield and Wilcoxon method (1949) | Sprague-Dawley rats; mean bw and ranges 80 g (50-108 g); 30-45 days | female | stomach tube | NaF in aqueous solution (0.2 - 1.6 mL/dose); 30 - 100 mg F/kg doses; | mortality confined to 24 hour; when doses equal to or greater than the LD50 were administered, half of the 80 g rats died within 6 hours; dose in mg F/kg and 24 hour mortality: 100-9/12 dead; 75-8/9 dead; 70-8/10 dead; 60-8/10 dead; 50-2/10 dead; 40-2/10 dead; 30-0/2 dead; salivation, diarrhea, thirst, lethargy | fasted 24 hour before dosing; at least seven dose levels used for each population; groups of 2 -12 rats; 63 rats used; 36 dead; detailed information from RTECS reference (master thesis for de Lopez 1970) | NA | DeLopez OH. 1970. Acute fluoride toxicity: plasma fluoride concentrations following acute oral doses of sodium fluoride in the rat. Master of Science thesis. *Univ. of Rochester School of Med. And Dent., Rochester, NY* (see DeLopez 1976) **(RTECS REFERENCE)** |
| Sodium I fluoride | 115 | 119 (54 mg F/kg; converted to mg NaF/kg) | 108 - 119 (slope = 1.28 [1.0 - 1.6]; 95% CL) | Litchfield and Wilcoxon method (1949) | Sprague-Dawley rats; mean bw and ranges 80 g (50-108 g); 30-45 days | female | stomach tube | NaF in aqueous solution (0.2 - 1.6 mL/dose); 30 - 100 mg F/kg doses | mortality confined to 24 hour; when doses equal to or greater than the LD50 were administered, half of the 80 g rats died within 6 hours; dose in mg F/kg and 24 hour mortality: 100-9/12 dead; 75-8/9 dead; 70-8/10 dead; 60-8/10 dead; 50-2/10 dead; 40-2/10 dead; 30-0/2 dead; salivation, diarrhea, thirst, lethargy | fasted 24 hour before dosing; at least seven dose levels used for each population; groups of 2 -12 rats; 63 rats used; 36 dead; detailed information from RTECS reference (master thesis for de Lopez 1970) | NA | DeLopez OH, Smith FA, Hodge HC. 1976. Plasma fluoride concentrations in rats acutely poisoned with sodium fluoride. Toxicol Appl Pharmacol 37:75-83. *Univ. of Rochester School of Med. And Dent., Rochester, NY* |
| Sodium I fluoride | 115 | 180 | 120 - 260 (these limits are +/- 1.96 S.D.) | Thompson method; Weil tables | Carworth-Wistar rats; 90-120 g; 4-5 weeks | male | oral gastric intubation | in aqueous solution; concentration intubated = 5 mg/mL; dosages arranged in a logarithmic series differing by a factor of 2 | LD50 based on mortalities during a 14 day period | non-fasted; groups of 5 rats; single oral dose toxicity | reagent grade | Smyth HF Jr, Carpenter CP, Weil CS, Pozzani UC, Striegel JA, Nycum, JS. 1969. Range-finding toxicity data: List VII. Am Ind Hyg Assoc J 30: 470-476. *Carnegie-Mellon University, Pittsburgh, PA* (LD50 value)<br><br>Smyth HF Jr, Carpenter CP, Weil CS, Pozzani UC, Striegel JA. 1962. Range-finding toxicity data: List VI. Am Ind Hyg Assoc J 23:95-107. *Mellon Institute of Industrial Research, Pittsburg, PA* (experimental parameters) |
| Sodium I fluoride | 115 | 189 (85.5 mg F/kg; converted to mg NaF/kg) | #2: 170 -209 (95%CI) | Litchfield and Wilcoxon method (1949) | Sprague-Dawley rats; 152-202 g | male | oral; intragastric | 50 to 220 mg F/kg (111 - 486 mg NaF/kg) in water | number of deaths determined at 1, 2, 4, 8, 24 hour and daily thereafter; 20 rats dead at 24 hour; 26 rats dead at 14 days; monitored for 2 weeks but no deaths after 4 days; deaths/dose (mg/kg): 111-0/10, 122-0/10, 134-1/10, 147-0/10, 162-0/10, 166-4/10, 183-4/10, 201-3/10, 221-6/10, 243-8/10 | fasted 18 hour before dosing; 10 day acclimatization before dosing; 8 rats in each dosage group; 80 rats used | >99.5% purity | Whitford GM, Birdsong-Whitford NL, et al. 1990. Acute oral toxicity of sodium fluoride and monofluorophosphate separately or in combination in rats. Caries Res 24(2):121-126. *Medical College of Georgia, Augusta, GA; Dept. of Odonto-Stomatologie, Laboratoires Goupil SA, Cachan, France.* |
| Sodium I fluoride | 115 | 200 | NA | NA | rats | NA | oral; stomach tube | NA | abdominal distress, diarrhea, cyanosis, dyspnea, fibrillation of skeletal muscles; onset within 6 hours | information from the laboratories of Division of Pharmacology, U.S. FDA.; fasted animals | NA | Lehman AJ. 1951. Chemicals in Foods: a report to the association of food and drug officials on current developments. Part II. Pesticides. Quarterly Bulletine (Association of Food and Drug Officials of the United States). Vol.15:122-133. *U.S. FDA* |
| Sodium I fluoride | 115 | 223 | NA | Probit analysis | Sprague-Dawley rats; 190-315 g | male | oral gavage | 0.101 - 0.500 g NaF/kg bw | animals observed for mortality frequently during first 4 hour after dosing; observed daily thereafter for 14 days | fasted 18 - 20 hour before dosing; 8 rats per group; 48 total rats used; mortality confined to 24 hour after dosing except 3 animals died on day 2, 3, and 5 | J.T. Baker Chemical Co. | Skare JA, Schrotei KR, Nixon GA. 1986. Lack of DNA-strand breaks in rat testicular cells after in vivo treatment with sodium fluoride. Mutat Res 170:85-92. *The Proctor and Gamble Company, Cincinnati, OH* |

**Rat and Mouse Oral LD50 Database**

| Reference Substance | Rat Oral $LD_{50}$[1] mg/kg | Rat Oral $LD_{50}$[2] mg/kg Primary Reference | $LD_{50}$[3] mg/kg (range) Primary Reference | $LD_{50}$ Calculation Method[4] Primary Reference | Animal Information (stock, weight, age) | Gender | Route and/or Method of Exposure | Dose | Observations | Notes | Reference Substance Source | Primary Reference |
|---|---|---|---|---|---|---|---|---|---|---|---|---|
| Sodium I fluoride | 115 | 279 (126.3 mg F/kg; converted to mg NaF/kg) | #1: 218 - 358 (95%CI) | Litchfield and Wilcoxon method (1949) | Sprague-Dawley rats; 152-202 g | male | oral; intragastric | 50 to 220 mg F/kg (111 - 486 mg NaF/kg) in water | number of deaths determined at 1, 2, 4, 8, 24 hour after dose and each day thereafter; 32% rats dead during 1st day; 23 rats dead at 14 days; monitored for 2 weeks but no deaths after 4 days; deaths/dose (mg/kg): 160- 1/10, 207- 4/10, 254-5/10, 330-6/10, 428-7/10 | fasted 18 hour before dosing; 10 day acclimatization before dosing; 10 rats in each dosage group; 50 rats used | >99.5% purity | Whitford GM, Birdsong-Whitford NL, et al. 1990. Acute oral toxicity of sodium fluoride and monofluorophosphate separately or in combination in rats. Caries Res 24(2):121-126. *Medical College of Georgia, Augusta, GA; Dept. of Odonto-Stomatologie, Laboratoires Goupil SA, Cachan, France.* |
| Sodium oxalate | 11160 | 11160 | NA | NA | rat | NA | oral | NA | NA | Value derived from 7500 mg/kg from RTECS for oxalic acid, which is a typo. Original reference (Vernot et al 1977) has 7.5 ml/kg) | NA | EHP, Environmental Health Perspectives. (U.S. Government Printing Office, Supt of Documents, Washington, DC 20402) No.1-1971. 106(Suppl). **(RTECS REFERENCE)** |
| Sodium oxalate | 11160 | 558.13 (converted from 7.5 mL/kg 5% oxalic acid) | 372 - 819 | moving average (Thompson & Weil) | Sprague-Dawley; 200-300 g | female | oral gastric intubation | 5% aqueous solution; doses arranged in a logarithmic series differing by a factor of 2 (assumed from Smyth et al. 1962) | LD50 based on mortalities during a 14 day period (assumed from Smyth et al. 1962) | non-fasted; groups of 5 rats; single oral dose toxicity (assumed from Smyth et al 1962); reported as 7.5 ml/kg of 5% oxalic acid | NA | Vernot EH, MacEwen JD, Haun CC, Kinkead ER. 1977. Acute toxicity and skin corrosion data for some organic and inorganic compounds and aqueous solutions. Toxicology and Applied Pharmacology 42:417-423. *(Indicates methods of Smyth et al. 1962 were used.)* |
| Sodium oxalate | 11160 | 706.96 (converted from 9.5 mL/kg 5% oxalic acid) | 402 - 915 | moving average (Thompson & Weil) | Sprague-Dawley; 200-300 g | male | oral gastric intubation | 5% aqueous solution; doses arranged in a logarithmic series differing by a factor of 2 (assumed from Smyth et al. 1962) | LD50 based on mortalities during a 14 day period (assumed from Smyth et al. 1962) | non-fasted; groups of 5 rats; single oral dose toxicity (assumed from Smyth et al 1962); reported as 9.5 ml/kg of 5% oxalic acid | NA | Vernot EH, MacEwen JD, Haun CC, Kinkead ER. 1977. Acute toxicity and skin corrosion data for some organic and inorganic compounds and aqueous solutions. Toxicology and Applied Pharmacology 42:417-423. *(Indicates methods of Smyth et al. 1962 were used.)* |
| Sodium selenate | 1.6 | 1.6 | NA | NA | rats | NA | oral | NA | NA | reference in Russian | NA | Novikov JV, Plitman SE, et al. 1984. Selenium in water and its effect on the human body. Gigiena i Sanitariya 49(9):66-68. **(RTECS REFERENCE)** |
| Sodium selenate | 1.6 | 5.98 | NA | NA | rats | NA | oral; stomach tube | NA | violent gastroenteritis, diarrhea, rice water stools,garlic breath, nervousness, CNS depression; onset within 15 min. | information from the laboratories of Division of Pharmacology, U.S. FDA.; fasted animals | NA | Lehman AJ. 1951. Chemicals in Foods: a report to the association of food and drug officials on current developments. Part II. Pesticides. Quarterly Bulletine (Association of Food and Drug Officials of the United States). Vol.15:122-133. *U.S. FDA* |
| Strychnine | 2.35 | 2.35 | NA | mortality curves | adult white rats | female | oral, stomach tube; single dose | 2.25 - 15 mg/kg dose; single dose; cmpd mixed in gum acacia and water; 1 mg/mL dose solution | 15, 10, 7.5, 6, 5mg/kg dose killed 90 rats (100% mortality); 4 mg/kg, 17/18 rats dead (95%); 3 mg/kg, 20/27 rats dead (74%); 2.5 mg/kg 19/27 rats dead (70%); 2.25 mg/kg, 7/18 rats dead (39%); 7.3 - 14.1 minutes average time to death | 180 rats used | U.S.P IX Strychnine alkaloid | Ward JC, Crabtree DG. 1942. Strychnine X. Comparative accuracies of stomach tube and intraperitoneal injection methods of bioassay. Journal of the American Pharmaceutical Association, Scientific Edition 31:113-115. *U.S. Fish and Wildlife Service, Denver, CO* **(RTECS REFERENCE)** |
| Strychnine | 2.35 | 6.5 | NA | mortality curves | adult white rats | male | oral, stomach tube; single dose | 5 - 15 mg/kg dose; single dose; cmpd mixed in gum acacia and water; 1 mg/mL dose solution | 15 mg/kg, 16/18 rats dead (89% mortality); 10 mg/kg, 15/18 rats dead (83%); 7.5 mg/kg, 16/18 rats dead (89%); 6 mg/kg 6/18 rats dead (33%); 5 mg/kg, 4/18 rats dead (39%); 10.8 - 19.5 minutes average time to death | 90 rats used | U.S.P IX Strychnine alkaloid | Ward JC, CrabtreeDG. 1942. Strychnine X. Comparative accuracies of stomach tube and intraperitoneal injection methods of bioassay. Journal of the American Pharmaceutical Association, Scientific Edition 31:113-115. *U.S. Fish and Wildlife Service, Denver, CO* |
| Strychnine | 2.35 | 16.2 | NA | NA | rats | NA | oral, stomach tube; single dose | NA | tonic convulsions; deaths from medullary paralysis and exhaustion and usually occur within a 12 hour period | NA | NA | Lehman AJ. 1951. Chemicals in Foods: a report to the association of food and drug officials on current developments. Part II. Pesticides. Quarterly Bulletine (Association of Food and Drug Officials of the United States). Vol.15:122-133. *U.S. FDA* |
| Strychnine | 2.35 | 25 | NA | statistical formula based on mortality rates | wild Norway rats | NA | oral, stomach tube; single dose | a number of individual doses of a cmpd, each dose at a different concentration level, are given to an equal number of test animals | convulsions | NA | NA | Peardon DL, Kilbourn E, et al. 1972. New selective rodenticides. Soap Cosmet Chem Spec 48(12):6. *Rohm and Haas Company, Philadelphia, PA* |
| Thallium I sulfate | 16 | 15.8 | +/- 0.9 (S.E.) | Litchfield and Fetig (1941) | wild Norway rats (trapped in Baltimore, MD); 134-579 g (ave = 298 g), adult | male and female | oral gavage | chemical suspended in 10% acacia solution; received appropriate doses in 1 mL per 100 g bw | rats survived from 6 - 72 hours | 37 rats used (approx. equal number of male/female); overnight fasting before dosing; assays performed in winter, repeated in summer; LD50 values from combined information; final LD50 was higher than winter LD50; attributed to not having enough rats in winter. | GIBCO brand; 99.0% pure | Dieke SH, Richter CP. 1946. Comparative assays of rodenticides on wild Norway rats. I. Toxicity. Publ Health Rep 61:672-679. *Johns Hopkins Hospital, Baltimore, MD* |
| Thallium I sulfate | 16 | 16 | NA | NA | rats | NA | oral | NA | NA | reference is a review article in Japanese; this LD50 value assumed to be from Peardon et al. 1972. | NA | Gekkan Yakuji. Pharmaceuticals Monthly. (Yakugyo Jihosha, Inaoka Bldg., 2-36 Jinbo-cho, Kanda, Chiyoda-ku, Tokyo 101, Japan) V.1- 1959. 1980. **(RTECS REFERENCE)** |
| Thallium I sulfate | 16 | 16 | NA | statistical formula based on mortality rates | wild Norway rats | NA | oral, stomach tube; single dose | a number of individual doses of a cmpd; each dose at a different conc level given to equal number of test animals | respiratory failure | NA | NA | Peardon DL, Kilbourn E, et al. 1972. New selective rodenticides. Soap Cosmet Chem Spec 48(12):6. *Rohm and Haas Company, Philadelphia, PA* |
| Thallium I sulfate | 16 | 25 | NA | NA | rats | NA | oral, stomach tube; single dose | NA | 72 hour observation; most rats dead within this period | fasted animals | NA | Lehman AJ. 1951. Chemicals in Foods: a report to the association of food and drug officials on current developments. Part II. Pesticides. Quarterly Bulletine (Association of Food and Drug Officials of the United States). Vol.15:122-133. *U.S. FDA* |
| Trichloroacetic acid | NA | 400 | NA | NA | rats | NA | oral | NA | NA | (source of information not provided) | NA | Worthing CR, Walker SB, eds. 1987. Pesticide Manual. 8th edition. 765-766. |
| Trichloroacetic acid | NA | 3320 | 3160 - 3480 (95% certainty; slope = 20.97) | Bliss | rats (raised in the laboratory); 150- 250 g; 70-100 days | male and female (mostly male) | oral intubation | single dose; acid adjusted with sodium hydroxide to pH range of 6 -7; 10 mL/kg dose volume | observed for 6 days; passed into narcosis to seminarcosis and died or recovered within 36 hours; dose in g/kg versus mortality: 2.594-0/5; 3.000-3/10; 3.153 - 1/5; 3.400-5/10; 3.800-9/10; 3991-5/5; 4.200-10/10; 4.600-10/10 | fasted 18 hours before dosing; 65 rats used; 43 of 65 dead | NA | Woodard G, Lange SW, Nelson KW, Calvery HO. 1941. The acute oral toxicity of acetic, chloroacetic, dichloroacetic, and trichloroacetic acids. J Ind Hyg Toxicol 23(2):78-82. |

**Rat and Mouse Oral LD50 Database**

| Reference Substance | Rat Oral $LD_{50}$[1] mg/kg | Rat Oral $LD_{50}$[2] mg/kg Primary Reference | $LD_{50}$[3] mg/kg (range) Primary Reference | $LD_{50}$ Calculation Method[4] Primary Reference | Animal Information (stock, weight, age) | Gender | Route and/or Method of Exposure | Dose | Observations | Notes | Reference Substance Source | Primary Reference |
|---|---|---|---|---|---|---|---|---|---|---|---|---|
| Trichloroacetic acid | NA | 5000 | | | rats | male | oral | NA | NA | NA | NA | Farm Chemicals Handbook. 1992. Meister Pub., 37841 Euclid Ave., Willoughy, OH. p. C326. |
| Trichloroacetic acid | NA | 5060 | | | rats | female | oral | NA | NA | NA | NA | Farm Chemicals Handbook. 1992. Meister Pub., 37841 Euclid Ave., Willoughy, OH. p. C326. |
| Trichloroacetic acid | NA | 8900 | 7000 - 9900 | NA | rats; 220 +/- 40 g | NA | oral; intragastric | NA | NA | (source of information not provided) | NA | Izmerov NF, Sanotsky IV, Sidorov KK. 1982. Toxicometric Parameters of Industrial Toxic Chemicals under Single Exposure. International Register of Potentially Toxic Chemicals (IRPTC). United Nations Environment Programme (UNEP). Centre of International Projects, GKNT. Moscow, Russia. |
| Triethylenemelamine | 13 | 1 | NA | NA | rats | NA | oral | NA | NA | Reference offers neither experimental details nor the primary reference for LD50. Value reported as "ca. 1" | NA | Hayes WJ Jr. 1964. The toxicology of chemosterilants. Bulletin of the World Health Organization. 31:721-736. *(RC's reference from 1983/84 RTECS.)* |
| Triethylenemelamine | 13 | 4 | NA | Probit method | Sprague-Dawley rats; 190-200 g | female | oral | geometric progression of 14 for dosing; in water or neat | 20 rats used; 11 dead; observed for 14 days | non-fasted; 4 groups of 5 female; 20 rats used | Polysciences, Inc. Warrington, PA | Thompson ED, Gibson DP. 1984. A method for determining the maximum tolerated dose for acute in vivo cytogenetic studies. Food Chem Toxicol 22(8):665-76. *The Procter and Gamble Co., Cincinnati, OH* |
| Triethylenemelamine | 13 | 6.9 | NA | Probit method | Sprague-Dawley rats; 190-200 g | male | oral | geometric progression of 14 for dosing; in water or neat | 20 rats used; 9 dead; observed for 14 days | non-fasted; 4 groups of 5 male; 20 rats used | Polysciences, Inc. Warrington, PA | Thompson ED, Gibson DP. 1984. A method for determining the maximum tolerated dose for acute in vivo cytogenetic studies. Food Chem Toxicol 22(8):665-76. *The Procter and Gamble Co., Cincinnati, OH* |
| Triethylenemelamine | 13 | 13 | 8 - 20 (95% CL; slope = 2.1) | Litchfield and Wilcoxin (1949) | Wistar rats; 150- 350 g | male and female | oral; stomach tube | dissolved in isotonic saline within 30 minutes of dosing; less than 5% weight of insoluble matter filtered out; highest dose 500 mg/kg | 14 observation period; absence of acute toxicity signs | information not grouped according to sex since differences not evident; 6 rats per dose; animals fasted overnight | NA | Philips FS, Thiersch JB. 1950. The nitrogen mustard-like actions of 2,4,6-tris(ethylenimino)-s-triazine and other bis(ethylenimines). Journal of Pharmacology and Experimental Therapeutics 100:398-407. *Sloan Kettering Institute for Cancer Research, New York, NY* **(RTECS REFERENCE)** |
| Triphenyltin hydroxide | 46 | 46.4 | NA | NA | Fischer rats; 6 weeks | male and female | oral intubation | single dose followed by daily doses up to 14 days | observed up to 14 days | NA | NA | Carcinogenesis bioassay of environmental chemicals annual progress report NIH-NCI-E-C-72-3252. 5/13/71 -- 8/6/73 and Final report NIH-NCI-E-71-2146. Submitted to The National Cancer Institute, National Institutes of Health, Bethesda, MD. 8/15/73 (revised 8/10/73). FM Garner (princ. investigat.) *Litton Bionetics, Inc., Bethesda, MD.* **(RTECS REFERENCE)** |
| Triphenyltin hydroxide | 46 | 156 | 115 - 208 (CL) | NA | rats | female | oral | single dose; 80, 160, 315, or 630 mg/kg doses | observed for 19 days; toxicity develops slowly; toxic signs 2 days after dose; deaths 5 - 9 days after initial dose; dose (mg/kg), number dead: 80 - 1/10; 160 - 4/10; 315 - 10/10; 630 - 10/10; toxic signs included squatting, ataxy, bristled hair, blood-crusted adherent margins of the eyelid, decreased respiratory rate and poor general condition | fasted animals; 4 groups of 10 female rats each; each received one dose; 35 of 40 died | triphenyltin hydroxide 96% | Pharma Forschung Toxikologie; Report 183/81; A 21593; Apr. 22, 1981; U.S. EPA, Office of Pesticide Programs; Health Effects Division; Tox Oneliners; MRID No. 00124210 and 00139030; Hoechst Aktiengesellschaft; EPA Acc. No. 071364; EPA Chem. Code: 083601; Core Grade/Tox Record No. minimum 005275 |
| Triphenyltin hydroxide | 46 | 160 | NA | NA | rats | NA | oral | NA | NA | NA | triphenyltin hydroxide 80.0% | Products Safety Labs; T-1399; May 8, 1992; U.S. EPA, Office of Pesticide Programs; Health Effects Division; Tox Oneliners; MRID No. 42265507; EPA Chem. Code: 083601; Core Grade/Tox Record No. Guideline 009941; Jan. 5, 1993; |
| Triphenyltin hydroxide | 46 | 165 | 113 - 230 (CL) | NA | rats | male | oral | single dose; 80, 160, 315, or 630 mg/kg doses | observed for 19 days; toxic signs 2 days after dose; toxicity develops slowly; deaths 5 - 13 days after initial dose; dose (mg/kg), number dead: 160 - 6/10; 315 - 10/10; 630 - 9/10; toxic signs included squatting, ataxy, bristled hair, blood-crusted adherent margins of the eyelid, decreased respiratory rate, dischourage of mucous feces, and poor general condition | fasted animals; 4 groups of 10 male rats each; each received one dose; 25 of 40 died | triphenyltin hydroxide 96% | Pharma Forschung Toxikologie; Report 182/81; A 21353; Apr. 22, 1981; U.S. EPA, Office of Pesticide Programs; Health Effects Division; Tox Oneliners; MRID No. 00124209; Hoechst Aktiengesellschaft; EPA Acc. No. 071364; EPA Chem. Code: 083601; Core Grade/Tox Record No. minimum 005275, minimum 003116 |
| Triphenyltin hydroxide | 46 | 240 | NA | NA | rats | male | oral | NA | NA | NA | triphenyltin hydroxide tech | U.S. EPA, Office of Pesticide Programs; Health Effects Division; Tox Oneliners; EPA Chem. Code: 083601; Core Grade/Tox Record No. 001493 |
| Triphenyltin hydroxide | 46 | 313 | 232 - 422 | NA | rats | male | oral | NA | NA | NA | triphenyltin hydroxide tech | Cannon Laboratories, Inc.; Jan. 31, 1978; U.S. EPA, Office of Pesticide Programs; Health Effects Division; Tox Oneliners; MRID No. 099049; EPA Chem. Code: 083601; Core Grade/Tox Record No. minimum 001492 |
| Triphenyltin hydroxide | 46 | 345 | 138 - 862 | NA | rats | female | oral | NA | NA | NA | triphenyltin hydroxide tech | Cannon Laboratories, Inc.; Jan. 31, 1978; U.S. EPA, Office of Pesticide Programs; Health Effects Division; Tox Oneliners; MRID No. 099049; EPA Chem. Code: 083601; Core Grade/Tox Record No. minimum 001492 |
| Triphenyltin hydroxide | 46 | 360 | NA | NA | rats | female | oral | NA | NA | NA | triphenyltin hydroxide tech | U.S. EPA, Office of Pesticide Programs; Health Effects Division; Tox Oneliners; EPA Chem. Code: 083601; Core Grade/Tox Record No. 001493 |
| Triphenyltin hydroxide | 46 | 375 | 280 - 502 | NA | rats | male | oral | NA | NA | NA | Duter WP (TPTH 47%) | Cannon Laboratories, Inc.; Feb. 23, 1978; U.S. EPA, Office of Pesticide Programs; Health Effects Division; Tox Oneliners; MRID No. 099049; EPA Chem. Code: 083601; Core Grade/Tox Record No. minimum 001492 |
| Triphenyltin hydroxide | 46 | 375 | | NA | rats | male and female | oral | NA | NA | NA | 50% WP (Reg. No. 148-1195 | U.S. EPA, Office of Pesticide Programs; Health Effects Division; Tox Oneliners; MRID No. 099049; EPA Chem. Code: 083601; Core Grade/Tox Record No. minimum |
| Triphenyltin hydroxide | 46 | 380 | 288 - 502 | NA | rats | female | oral | NA | NA | NA | Duter WP (TPTH 47%) | Cannon Laboratories, Inc.; Feb. 23, 1978; U.S. EPA, Office of Pesticide Programs; Health Effects Division; Tox Oneliners; MRID No. 099049; EPA Chem. Code: 083601; Core Grade/Tox Record No. minimum 001492 |

**Rat and Mouse Oral LD50 Database**

| Reference Substance | Rat Oral $LD_{50}$[1] mg/kg | Rat Oral $LD_{50}$[2] mg/kg Primary Reference | $LD_{50}$[3] mg/kg (range) Primary Reference | $LD_{50}$ Calculation Method[4] Primary Reference | Animal Information (stock, weight, age) | Gender | Route and/or Method of Exposure | Dose | Observations | Notes | Reference Substance Source | Primary Reference |
|---|---|---|---|---|---|---|---|---|---|---|---|---|
| Triphenyltin hydroxide | 46 | 720 | 520 - 920 | NA | rats | female | oral | NA | NA | NA | Kansai Robamame soin B A/F 1000B (Red Point) | Bio/dynamics, Inc.; 6584-81; Sept. 30, 1981; U.S. EPA, Office of Pesticide Programs; Health Effects Division; Tox Oneliners; MRID No. 00086072; EPA Chem. Code: 083601; Core Grade/Tox Record No. Guideline 001881 |
| Triphenyltin hydroxide | 46 | 830 | 580 - 1080 | NA | rats | male and female | oral | NA | NA | NA | Kansai Robamame soin B A/F 1000B (Red Point) | Bio/dynamics, Inc.; 6584-81; Sept. 30, 1981; U.S. EPA, Office of Pesticide Programs; Health Effects Division; Tox Oneliners; MRID No. 00086072; EPA Chem. Code: 083601; Core Grade/Tox Record No. Guideline 001881 |
| Triphenyltin hydroxide | 46 | 840 | 512 - 1378 | NA | rats | unknown | oral | NA | NA | NA | Duter Flowable 30 (TPTH 19.7%) | Cannon Laboratories, Inc.; 9E-6359; Nov. 13, 1979; U.S. EPA, Office of Pesticide Programs; Health Effects Division; Tox Oneliners; MRID No. 00086591; EPA Chem. Code: 083601; Core Grade/Tox Record No. minimum 001496 |
| Triphenyltin hydroxide | 46 | 1200 | 600 - 1800 | NA | rats | male | oral | NA | NA | NA | Kansai Robamame soln B A/F 1000B (Red Point) | Bio/dynamics, Inc.; 6584-81; Sept. 30, 1981; U.S. EPA, Office of Pesticide Programs; Health Effects Division; Tox Oneliners; MRID No. 00086072; EPA Chem. Code: 083601; Core Grade/Tox Record No. Guideline 001881 |
| Valproic acid | 670 | 670 | 598 - 750 (95% CL; slope = 1.2 [1.0 - 1.4; 95% CL]) | Litchfield and Wilcoxon method (1949) | Osborne-Mendel rats; young adult | male and female | oral intubation | 2% in water | usual observaton time of 2 weeks; depression, scrawny appearance, diarrhea; dead within 2 hour - 2 days | 18 hours fasting; groups of 10 rats; evenly divided between male and female | commercially available material | Jenner PM, Hagan EC, Taylor JM, Cook EL, Fitzhugh OG. 1964. Food flavorings and compounds of related structure I. Acute Oral Toxicity. Fd Cosmet Toxicol 2:327-334. *U.S. Food and Drug Administration, Washington, D.C.* **(RTECS REFERENCE)** |
| Valproic acid | 670 | 1480 | NA | NA | rats | male and female | oral | NA | NA | reference in French | NA | Deboeck AM. Valproic acid salt, its preparation and utilization. European Patent Office, Publication No. EP 0078785A1. Application date 11/03/82. |
| Verapamil HCl | 108 | 108 | NA | NA | rats | NA | oral | NA | NA | NA | NA | Drugs in Japan (Ethical Drugs). (Yakugyo Jiho Co., Ltd., Tokyo, Japan). 1982. **(RTECS REFERENCE)** |
| Verapamil HCl | 108 | 114 | 97 - 135 | Litchfield and Wilcoxin (1949) | rats | NA | oral | NA | NA | reference in German | NA | Haas VH, Hartfelder G. 1962. A-Isopropyl-a-[(N-methyl-N-homoveratryl-g-amino-propyl]-3,4-dimethoxyphenylacetonitrile, eine Substanz mit coronargefaferweiternden Eigenschaften 12:549-558 |
| Xylene | 4300 | 1537 | 1294 - 1781 (95% CL; slope = 9.6) | Finney (1971) Probit Analysis | ChR-CD; ave bw for each group = 253, 251, and 256 g; young adults | male | oral; intragastric intubation | single dose in aqueous solution (25%); doses = 1200, 1600, 2000 mg/kg; dose = 1.2 - 2.0 mL | 16 dead; observed over 14-day recovery period; 1200 dose: lacrimation and wet perineal area (1/10 dead); 1600 dose: tremors, salivation, prostration, piloerection, lacrimation, wet perineal area, ataxia (7/10 dead; death within 15 hours after dosing); 2000 dose: tremors, severe fascicutations, ataxia, lacrimation, prostration, piloerection, lethargy, wet and stained perineal area, weakness (8/10 dead) | 3 groups of 10 rats each; date of test is 1979 | NA | from EPA TSCATS database; Oral LD50 test (1979), EPA Document No. 878221390 Fiche No. OTS0215213; *E.I Dupont DeNemours & Co., Inc./Haskell Labs* |
| Xylene | 4300 | 4300 | NA | NA | white rats; Wistar; 175- 250 g | male | oral; stomach tube | single dose in either olive oil or corn oil solution emulsified with aqueous solution of acacia; or undiluted; no more than 7 cc administered | all surviving rats observed up to 2 weeks; 20 rats used | percent of isomers: *o* = 19; *p* = 24; *m* = 52 | NA | Wolfe MA, Rowe VK, McCollister DD, Hollingsworth RL, Oyen F. 1956. Toxicological studies of certain alkylated benzenes and benzene: experiments on laboratory animals. AMA Archives of Industrial Health. 14:387-397. *The Dow Chemical Co. Midland, MI.* **(RTECS REFERENCE)** |
| Xylene | 4300 | 8314 | 7716 - 8803 (95% CL) | Finney (1971) Probit Analysis | ChR-CD; ave bw each group = 276, 258, 286, 262, 256 g; young adults | male | oral; intragastric intubation | single dose in corn oil (50% solution); doses = 7500, 8000, 9000, and 9500 mg/kg; dose = 3.93-5.25 mL | 16 dead; observed over 14-day recovery period; 7500 dose: (3/10 dead); 8000 dose: (3/10 dead); 9000 dose: (6/10 dead); 9500 dose (10/10 dead); salivation, lethargy, ruffled fur, diarrhea, respiratory congestion, wet/bloody perineal areas | 4 groups of 10 rats each; date of test is 1975 | NA | from EPA TSCATS database; Oral LD50 test (1975), EPA Document No. 878221390 Fiche No. OTS0215213; *E.I Dupont DeNemours & Co., Inc./Haskell Labs* |
| Xylene | 4300 | 8620 (10 mL/kg; density = 0.862) | 6465 - 11465 (CL; reported as 7.5 - 13.3 mL/kg) | Litchfield and Wilcoxon method (1949) | Long-Evans rats; 150-300 g | male | oral; intragastric intubation | single dose; graded doses up to 25 mL/kg; undiluted samples | observed for 14 days; mortality values based on the number of animals which died during this time; 6 rats per dose | ortho, meta, and para xylene; ethyl benzene | aromatic concentrated from commercial source by an absorption technique; 98% aromatic. | Hine CH, Zuidema HH. 1970. The toxicological properties of hydrocarbon solvents. Industrial Medicine. 39(5):39-44. |

Abbreviations: NA=Not available; CL=Confidence limit; CI=Confidence interval; SE=Standard error; UDP=Up-and-Down Procedure; TSCATS=Toxic Substances Control Act Test Submissions; RTECS=Registry of Toxic Effects of Chemical Substances; min=Minimum; HSDB=Hazardous Substances Data Bank (NLM 2001).

**Gray cells highlight the rationale for exclusion of reference value.**

[1] RTECS® database value at the time of database search by NICEATM (2002). If rat oral $LD_{50}$ was unavailable, rat oral $LD_{50}$ from HSDB was used, or mouse oral $LD_{50}$ from RTECS was used.
[2] Value reported in the reference publication.
[3] Range (if provided in the reference publication).
[4] Method reported from the reference publication.

# Appendix H2

## Evaluation of the Candidate Reference Oral $LD_{50}$ Data

***[This Page Intentionally Left Blank]***

## H.2 Evaluation of the Candidate Reference Oral $LD_{50}$ Data

The 491 $LD_{50}$ values identified by the literature search consisted of 485 rat oral $LD_{50}$ values and six mouse oral $LD_{50}$ values. Mouse oral $LD_{50}$ values were used to determine reference values for colchicine, epinephrine bitartrate, and propylparaben since rat oral $LD_{50}$ values for these three reference substances could not be located. Thirty rat oral $LD_{50}$ values were believed to be duplicates of other reported values because the $LD_{50}$ values and the experimental information matched exactly those cited by other publications from the same author(s) or because the same animal data were used to calculate multiple $LD_{50}$ values (e.g., to evaluate various methods of calculation).

Two rat oral $LD_{50}$ values provided by RTECS® were incorrect, possibly due to typographical errors. For the value of 200 mg/kg for acetylsalicylic acid, RTECS® cited a review by Diechmann (1969) that referred to a paper by Coldwell and Boyd (1966). Coldwell and Boyd (1966), however, actually reported an $LD_{50}$ of 920 mg/kg. For sodium oxalate, RTECS® cited a review paper by Walum (1998) for an $LD_{50}$ value of 11160 mg/kg. Although Walum (1998) provided no source, the $LD_{50}$ is the same as that used in the MEIC study (Ekwall et al. 1998b). That $LD_{50}$ was calculated from the $LD_{50}$ for oxalic acid (Ekwall et al. 1998b) which is 7500 mg/kg according to RTECS®. The source for this figure, however, provides a value of 7.5 mL/kg of 5% oxalic acid (Vernot et al. 1977). Extrapolating this to sodium oxalate (MW=134.0 g/mole vs 90.04 g/mole for oxalic acid) yields an $LD_{50}$ of 558 mg/kg.

After exclusion of the 30 duplicate values and the two erroneous values for acetylsalicylic acid and sodium oxalate, 459 records remained for further evaluation. **Figure H2-1** shows the frequency of the number of $LD_{50}$ values retrieved for the 72 reference substances. The number of $LD_{50}$ values identified for any one reference substance ranged from one to 29. The highest frequency was two $LD_{50}$ values per reference substance (14 reference substances). The highest number of $LD_{50}$ values retrieved for an individual reference substance (acetonitrile) was 29. A large number of $LD_{50}$ values were also identified for hexachlorophene (21), ethylene glycol (19), and carbon tetrachloride (19). Only one $LD_{50}$ value was identified for seven reference substances: aminopterin, digoxin, epinephrine bitartrate, glutethimide, physostigmine, and propranolol HCl.

**Figure H2-1 Distribution of the Number of $LD_{50}$ Values Per Reference substance**

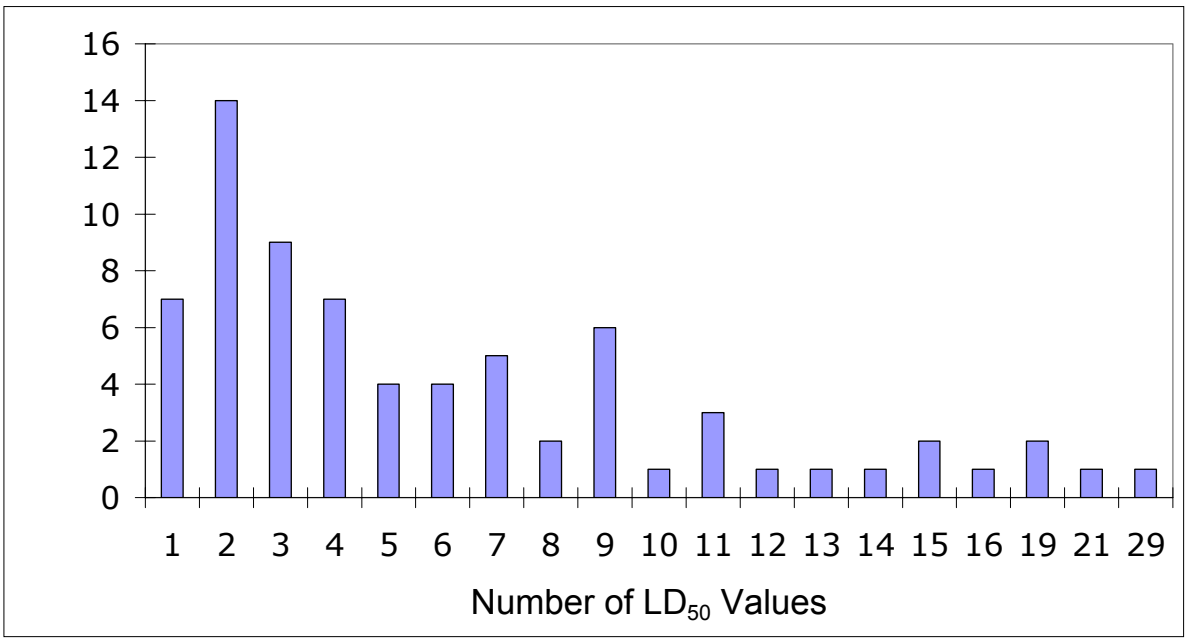


Bars show number of reference substances with the noted number of $LD_{50}$ values for the 459 oral $LD_{50}$ values remaining after the exclusion of 30 duplicate values and two erroneous values.

H.2.1 Protocols Used for the Candidate Reference Data

The $LD_{50}$ data were collected using various protocols; however, information on the protocol details was often incomplete due to limited documentation in the reports. The 459 remaining data records exhibited the following characteristics:

- 64% (293/459) specified the stock or strain of rodent used. The remaining 36% (167/459) that did not specify the stock/strain described rats as rats, albino rats, white rats, rats of different strains, and mice were described as mice.
- 63% (290/459) included age or weight information for the rodents.
- 77% (354/459) specified the gender of the rodent.
- 66% (305/459) stated the method used to calculate the $LD_{50}$.
- 48% (221/459) reported the number of rodents used at each dose and 47% (216/459) reported the total number of rodents used.
- 26% (118/459) specified the doses used.
- 14% (66/459) quantitatively specified the purity of the reference substance used. Of the remaining records, 18% (83/459) described the purity qualitatively using such terms as “technical grade,” “pure,” “reagent grade,” and “pharmaceutical grade,” 11% (51/459) named only the source of the reference substance, and 56% (259/459) provided no information on the reference substance.
- 13% (61/459) reported the deaths at each dose.

Although many $LD_{50}$ studies did not specify the strain or stock of rat used, the 293 studies that provided this information indicated that Sprague-Dawley/CD rats were the strain most frequently used (see **Figure H2-2**). Wistar rats were also frequently used. Strains such as Alderly Park, SD-JCL, THOM, Gunn, and HLA were the least frequently used. Of the six mouse $LD_{50}$ values, the strain was unspecified for two studies. The other four $LD_{50}$ values were obtained using CD-1, MS/Ae, dd, and B6D1F1(BDF1) mice.

Of the 354 studies that reported rodent gender, the most frequently used gender for both rodents was male, which was used for 193 (55%) $LD_{50}$ values. Female rodents were used for 104 (29%) $LD_{50}$ values, both sexes were used for 55 (16%) $LD_{50}$ values, and rodents of unspecified gender were used for 104 (29%) $LD_{50}$ values.

**Figure H2-2 Distribution of Rat Stocks/Strains**

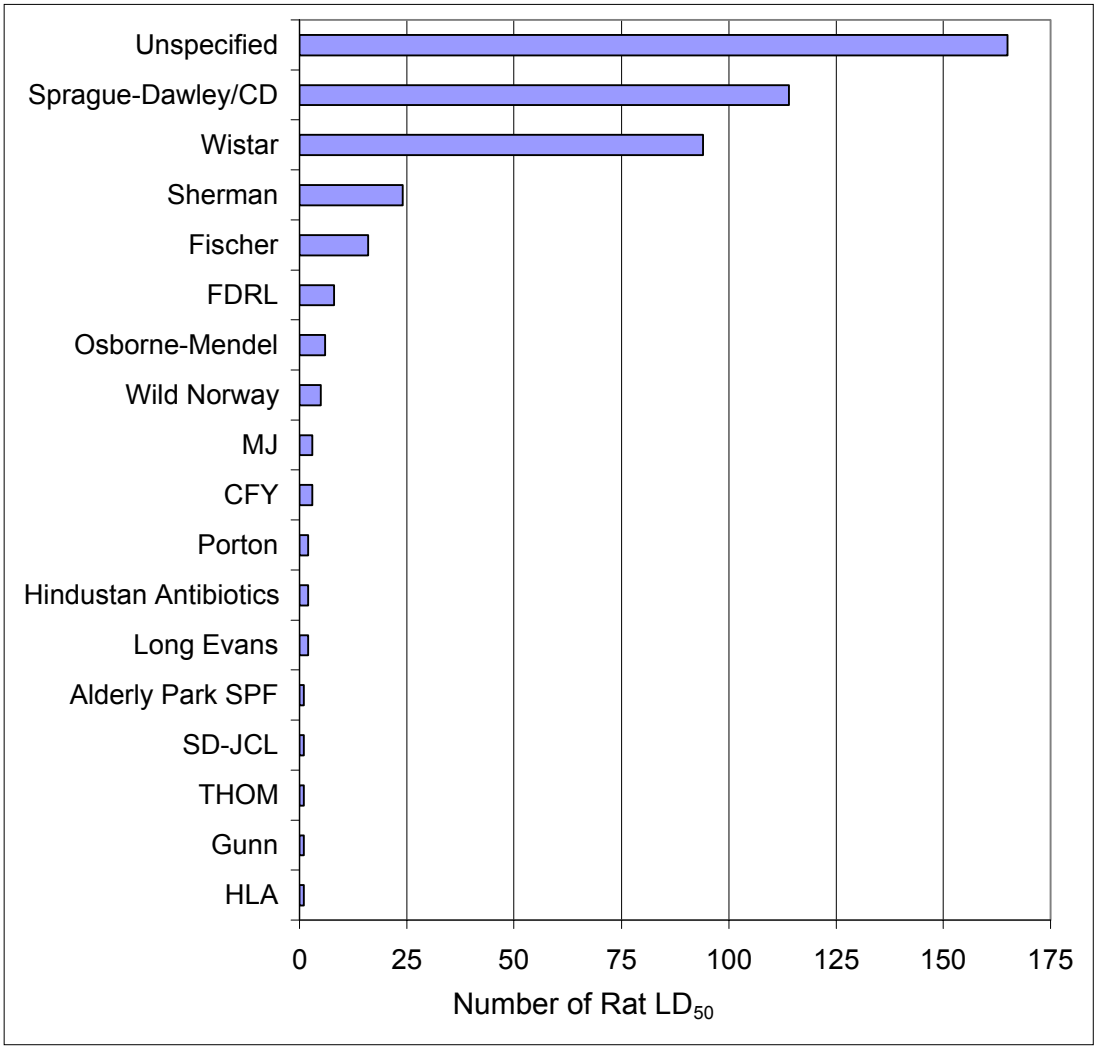


Bars show number of rat oral $LD_{50}$ records for each rat strain for the 453 rat values remaining after the exclusion of 30 duplicate values, two erroneous values, and six mouse values.

The age of the rodents used for the acute oral lethality studies also varied. Of the 174 $LD_{50}$ studies that reported age, the most frequently used age was 4-7 weeks, which was reported for 42 (24%) $LD_{50}$ values (see **Figure H2-3**). The majority of the reported ages were descriptive. Forty-five (26%) $LD_{50}$ values used rodents that were described as young, adults, young adults, or older adults. Thirty (17%) $LD_{50}$ studies used 8-12 week old rodents, which is the age recommended by current oral acute toxicity test guidelines (OECD 2001a, c, d; EPA 2002a). Twenty-three (13%) $LD_{50}$ values were determined using rodents less than four weeks of age, and 34 (20%) $LD_{50}$ values were determined using rodents greater than 12 weeks old.

**Figure H2-3 Distribution of Rat and Mouse Ages**

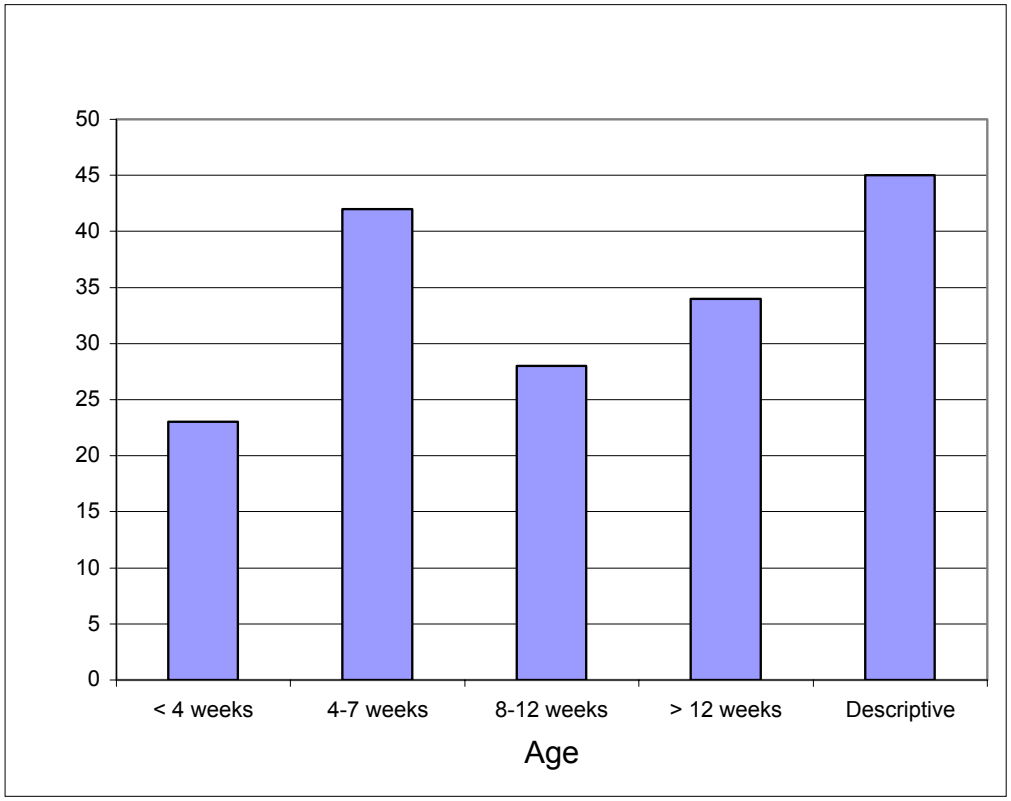


Bars show the number of rat and mouse $LD_{50}$ records that report using animals of the specified ages. Descriptive indicates that age was described qualitatively (e.g., adult, juvenile).

The duration of animal observation was not specified for 39% (179/459) of the $LD_{50}$ reports. Of the 280 (61%) studies that reported the duration of observation, 136 (48%) reported an observation period of 14 days, which is recommended in the current oral acute toxicity test guidelines (OECD 2001a, c, d; EPA 2002a). The second most commonly used observation period was seven days, which was reported by 59 (21%) studies. Clinical signs were reported in 30% (137/459) of the studies.

Of the 305 studies that reported the method used to calculate the $LD_{50}$ value, the most frequently used were the graphical log-probit methods such as Litchfield and Wilcoxon (1949), with 99 (33%) $LD_{50}$ values, and Miller and Tainter (1944), with 24 (8%) $LD_{50}$

values. The maximum likelihood probit method of Bliss (1938) and modifications were used for the calculation of 46 (15%) $LD_{50}$ values. An additional 36 (12%) $LD_{50}$ values were calculated using methods referred to in a general way as probit or log probit methods. The moving average method, such as that of Thompson (1947) or Weil (1952), was cited for 57 (19%) $LD_{50}$ values. Thirteen (4%) $LD_{50}$ values were described as being calculated by one method or another (e.g., by Weil or Litchfield and Wilcoxon), or by methods that were described generally, such as graphical or approximative. Some of the least frequently used methods were linear regression (six values), UDP (four values), and linear interpolation (one value). Estimates of variability such as confidence limits, standard error, or standard deviation were included in 62% (283/459) of the $LD_{50}$ reports, but only 6% (28/459) included slopes.

H.2.2 Final Reference Values

Based on the study exclusion criteria described in **Section 4.1.2**, 73 (16%) of the 459 records identified were excluded. Thirty-one $LD_{50}$values were excluded because they were reported as ranges, 21 were excluded because the rats were less than four weeks old, five were excluded because the rats were feral, five were excluded because the rats were anesthetized, and four were excluded because the reference substance administered was mixed with food. Additionally, four $LD_{50}$ values for copper sulfate pentahydrate were excluded because very low purity (i.e., ≤20%) reference substance was used. Three $LD_{50}$ values were excluded because they were outliers at the 99% level (Dixon and Massey 1981) compared with the rest of the values for the particular reference substance. These included one ethylene glycol value of 17,800 mg/kg (range of the other 16 values=4000-9900 mg/kg), one meprobamate value of 794 mg/kg (range of other six values=1286-1522 mg/kg), and one mercury chloride value of 160 mg/kg (range of other 10 values=12-92 mg/kg). **Appendix H-1** provides the individual rationale for each $LD_{50}$ value excluded by shading the cell that contains the reason for exclusion.

Triethylenemelamine, trichloroacetic acid, and xylene had the largest confidence limits in proportion to the geometric means. The confidence limits for triethylenemelamine and xylene were calculated from four $LD_{50}$ values while those for trichloroacetic acid were calculated with five $LD_{50}$ values. Nicotine and 2-propanol had the smallest confidence limits even though the number of values per reference substance were similar to that for the reference substances with large confidence limits (nicotine N=4, 2-propanol N=6).

***[This Page Intentionally Left Blank]***

# Appendix I

## *In Vitro* NRU Data

**I1 3T3 NRU Reference Substance Data..... I-3**

**I2 NHK NRU Reference Substance Data .....I-59**

**I3 3T3 NRU Positive Control (SLS) Data.....I-111**

**I4 NHK NRU Positive Control (SLS) Data .....I-129**

***[This Page Intentionally Left Blank]***

# Appendix I1

## 3T3 NRU Reference Substance Data

***[This Page Intentionally Left Blank]***

# 3T3 NRU Reference Substance Data

| Experiment ID 3T3 Cells | Assay Type[1] | Substance ID | $IC_{50}$ (ug/mL) | $IC_{50}$ (mM) | Mean VC OD[2] | Difference of right/left VC from mean VC[3] | Number of Points 0 - 50 %[4] | Number of Points 50 - 100 %[5] | $R^2$ [6] | Exposure Concentrations (ug/mL)[7] | Dilution Factor[8] | Acceptable Tests[9] | Rationale for Unacceptability | Notes | PC ID |
|---|---|---|---|---|---|---|---|---|---|---|---|---|---|---|---|
| **ACETAMINOPHEN** | | | | | | | | | | | | | | | |
| ***IIVS*** | | | | | | | | | | | | | | | |
| A1 | RF | AA61HU | 30.8 | 0.203 | 0.266 | 0.88% | 2 | 6 | 0.9628 | 1000, 100, 10, 1, 0.1, 0.01, 0.001, 0.0001 | 10 | RF | range finder | | SLS-A5 |
| B1 | DF | AA61HU | 32.1 | 0.212 | 0.457 | 0.71% | 3 | 5 | 0.9728 | 100, 66.7, 44.4, 29.6, 19.8, 13.2, 8.78, 5.85 | 1.5 | YES | | | SLS-B5 |
| B2 | DF | AA61HU | 54.8 | 0.363 | 0.402 | 4.77% | 2 | 5 | 0.9221 | 100, 66.7, 44.4, 29.6, 19.8, 13.2, 8.78, 5.85 | 1.5 | YES | | | SLS-B9 |
| B3 | DF | AA61HU | 43.3 | 0.286 | 0.356 | 1.85% | 3 | 5 | 0.9794 | 100, 66.7, 44.4, 29.6, 19.8, 13.2, 8.78, 5.85 | 1.5 | YES | | | SLS-B10 |
| ***ECBC*** | | | | | | | | | | | | | | | |
| AA61LR-A1 | RF | AA61LR | 66.8 | 0.442 | 0.253 | 4.38% | 2 | 0 | 0.9619 | 1000, 100, 10, 1, 0.1, 0.01, 0.001, 0.0001 | 10 | RF | range finder | | SLS-14 |
| AA61LR-B1 | DF | AA61LR | 30.3 | 0.200 | 0.449 | 13.54% | 5 | 3 | 0.9875 | 200, 136, 92.6, 63.0, 42.8, 29.1, 19.8, 13.5 | 1.47 | YES | | | SLS-P38 |
| AA61LR-B2 | DF | AA61LR | 46.1 | 0.305 | 0.298 | 3.30% | 4 | 4 | 0.9557 | 200, 136, 92.6, 63.0, 42.8, 29.1, 19.8, 13.5 | 1.47 | YES | | | SLS-P39 |
| AA61LR-B3 | DF | AA61LR | 46.1 | 0.305 | 0.407 | 3.13% | 4 | 4 | 0.9855 | 200, 136, 92.6, 63.0, 42.8, 29.1, 19.8, 13.5 | 1.47 | YES | | | SLS-P42 |
| ***FRAME*** | | | | | | | | | | | | | | | |
| FAL.3T3.PY.A1.21.10.04 | RF | AA61PY | 62.1 | 0.411 | 0.212 | 1.41% | 2 | 6 | 0.9541 | 1000, 100, 10, 1.0, 0.1, 0.01, 0.001, 0.0001 | 10 | RF | range finder | | FAL.3T3.SLS.21.10.04 |
| FAL.3T3.PY.B1.26.11.04 | DF | AA61PY | 92.3 | 0.610 | 0.290 | 3.71% | 4 | 2 | 0.9374 | 1000, 465, 216, 101, 46.8, 21.8, 10.1, 4.7 | 2.15 | YES | | | FAL.3T3.SLS.26.11.04 |
| FAL.3T3.PY.B2.02.12.04 | DF | AA61PY | 57.1 | 0.378 | 0.194 | 4.85% | 6 | 2 | 0.9518 | 500, 340, 231, 157, 107, 72.8, 49.6, 33.7 | 1.47 | YES | | | FAL.3T3.SLS.03.12.04 |
| FAL.3T3.PY.B3.09.12.04 | DF | AA61PY | 49.1 | 0.325 | 0.416 | 1.16% | 6 | 2 | 0.9672 | 500, 340, 231, 157, 107, 72.8, 49.6, 33.7 | 1.47 | YES | | | FAL.3T3.SLS.09.12.04 |
| **ACETONITRILE** | | | | | | | | | | | | | | | |
| ***IIVS*** | | | | | | | | | | | | | | | |
| A1 | RF | AA61GF | NA | NA | 0.393 | 2.29% | 0.0 | 7 | 0.0319 | 10000, 1000, 100, 10, 1, 0.1, 0.01, 0.001 | 10 | RF | range finder | | SLS-A1 |
| B1 | DF | AA61GF | 18100 | 441.25 | 0.305 | 45.66% | 2 | 3 | 0.8837 | 100000, 71429, 51020, 36443, 26031, 18593, 13281, 9486 | 1.4 | NO | % VC difference >15 | VC1 ODs lower than VC2 values; volatility issues. VC1 removed from subsequent analysis. | SLS-B6 |
| B2 | DF | AA61GF | 10500 | 256.854 | 0.426 | 0.14% | 4 | 1 | 0.9638 | 100000, 71429, 51020, 36443, 26031, 18593, 13281, 9486 | 1.4 | YES | | OD measured 15-16 hr late; orignial reading used wrong OD wavelength; plate sealer used; outliers removed by SD; ppt in 1X C1-C4 | SLS-B11 |
| B3 | DF | AA61GF | 8070 | 196.647 | 0.330 | 3.56% | 6 | 2 | 0.9540 | 20000, 16667,13889, 11574, 9645, 8038, 6698, 5582 | 1.2 | YES | | plate sealer used | SLS-B12 |
| B4 | DF | AA61GF | 9420 | 229.449 | 0.336 | 0.05% | 4 | 4 | 0.8516 | 20000, 16667,13889, 11574, 9645, 8038, 6698, 5582 | 1.2 | YES | | plate sealer used; outliers removed by SD | SLS-B13 |
| B5 | DF | AA61GF | NA | NA | NA | NA | NA | NA | NA | NA | NA | NO | PC failed | | SLS-B14 |
| ***ECBC*** | | | | | | | | | | | | | | | |
| AA61PH-A1 | RF | AA61PH | NA | NA | 0.309 | 4.26% | 0 | 0 | NA | 10000, 1000, 100,10, 1, 0.1, 0.01, 0.001 | 10 | RF | range finder | no toxicity detected | SLS-P1 |
| AA61PH-A2 | RF | AA61PH | NA | NA | 0.308 | 36.98% | 2 | 3 | NA | 200000, 20000, 2000, 200, 20, 2, 0.2, 0.02 | 10 | RF | range finder | | SLS-P3 |
| AA61PH-B1(sealer) | DF | AA61PH | NA | NA | 0.372 | 19.13% | 5 | 2 | NA | 50000, 34014, 23139, 15740, 10708, 7284, 4955, 3371 | 1.47 | NO | %VC difference > 15 | | SLS-P38 |

# 3T3 NRU Reference Substance Data

| Experiment ID 3T3 Cells | Assay Type[1] | Substance ID | $IC_{50}$ (ug/mL) | $IC_{50}$ (mM) | Mean VC OD[2] | Difference of right/left VC from mean VC[3] | Number of Points 0 - 50 %[4] | Number of Points 50 - 100 %[5] | $R^2$ [6] | Exposure Concentrations (ug/mL)[7] | Dilution Factor[8] | Acceptable Tests[9] | Rationale for Unacceptability | Notes | PC ID |
|---|---|---|---|---|---|---|---|---|---|---|---|---|---|---|---|
| AA61PH-B2 (sealer) | DF | AA61PH | NA | NA | 0.257 | 29.42% | 6 | 1 | NA | 50000, 34014, 23139, 15740, 10708, 7284, 4955, 3371 | 1.47 | NO | %VC difference > 15 | | SLS-P39 |
| AA61PH-B3 (sealer) | DF | AA61PH | 6340 | 154.414 | 0.448 | 7.35% | 6 | 2 | 0.9770 | 50000, 34014, 23139, 15740, 10708, 7284, 4955, 3371 | 1.47 | YES | | | SLS-P41 |
| AA61PH-B4 (sealer) | DF | AA61PH | 6580 | 160.209 | 0.445 | 14.54% | 4 | 2 | 0.9796 | 40000, 27211, 18511, 12592, 8566, 5827, 3964, 2697 | 1.47 | YES | | | SLS-P43 |
| AA61PH-B5 (sealer) | DF | AA61PH | 6380 | 155.484 | 0.453 | 4.90% | 5 | 3 | 0.9823 | 40000, 27211, 18511, 12592, 8566, 5827, 3964, 2697 | 1.47 | YES | | | SLS-P45 |
| ***FRAME*** | | | | | | | | | | | | | | | |
| FAL3T3.PL.A1.22-01-04 | RF | AA61PL | NA | NA | 0.439 | 1.52% | 0 | 3 | 0.0000 | 10000, 1000, 100, 10, 1, 0.1, 0.01, 0.001 | 10 | RF | range finder | | FAL.3T3.SLS.22/01/04 |
| FAL3T3.PL.B1.29-01-04 | DF | AA61PL | 56800 | 1382.569 | 0.404 | 17.45% | 1 | 4 | 0.8826 | 100000, 46512, 21633, 10062, 4680, 2177, 1012, 471 | 2.15 | NO | %VC difference >15 | volatility problem; C1 alkaline | FAL3T3.SLS.29-01-04 |
| FAL3T3.PL.B2.05-02-04 | DF | AA61PL | 6920 | 168.534 | 0.230 | 62.44% | 2 | 2 | 0.9721 | 100000, 46512, 21633, 10062, 4680, 2177, 1012, 471 | 2.15 | NO | PC failed; % VC difference > 15 | problem with reservoir liners; volatility issue; VC1 <<< VC2 | FAL.3T3.SLS.5/02/04 |
| FAL3T3.PL.B4.25-02-04 | DF | AA61PL | NA | NA | 0.331 | 71.55% | 3 | 1 | NA | 100000, 46512, 21633, 10062, 4680, 2177, 1012, 471 | 2.15 | NO | %VC difference >15; possible volatility problem | | FAL3T3.SLS.25.02.04 |
| FAL3T3.PL.B5.29-04-04 | DF | AA61 PL | 15200 | 371.267 | 0.327 | 2.12% | 2 | 4 | 0.8985 | 25000, 11628, 5408, 2516, 1170, 544, 253, 118 | 2.15 | YES | | heated C1-C3 to dissolve | FAL.3T3.SLS.29/04/04 |
| FAL3T3.PL.B6.06-05-04 | DF | AA61 PL | 9930 | 241.928 | 0.334 | 5.53% | 3 | 5 | 0.9631 | 30000, 20408, 13883, 9444, 6425, 4371, 2973, 2023 | 1.47 | YES | | | FAL.3T3.SLS.06/05/04 |
| FAL3T3.PL.B7.20/05/04 | DF | AA61 PL | 6490 | 158.011 | 0.344 | 19.62% | 2 | 4 | 0.8881 | 30000, 13953, 6490, 3019, 1404, 653, 304, 141 | 2.15 | NO | %VC difference >15; possible volatility problem | SD having difficulty in using plate covers for volatility problems | FAL.3T3.SLS.20/05/04 |
| FAL3T3.PL.B8.27/05/04 | DF | AA61 PL | 3940 | 95.871 | 0.354 | 7.19% | 3 | 3 | 0.9226 | 30000, 13953, 6490, 3019, 1404, 653, 304, 141 | 2.15 | YES | | C1-C3 heated to dissolve | FAL.3T3.SLS.27/05/04 |

## ACETYLSALICYLIC ACID

| | | | | | | | | | | | | | | | |
|---|---|---|---|---|---|---|---|---|---|---|---|---|---|---|---|
| ***IIVS*** | | | | | | | | | | | | | | | |
| A1 | RF | AA61HM | 480 | 2.662 | 0.371 | 2.14% | 1 | 2 | 0.9294 | 1000, 100, 10, 1, 0.1, 0.01, 0.001, 0.0001 | 10 | RF | range finder | | SLS-A3 |
| B1 | DF | AA61HM | 344 | 1.911 | 0.413 | 7.89% | 5 | 3 | 0.9635 | 2000, 1333, 889, 593, 395, 263, 176, 117 | 1.5 | YES | | | SLS-B5 |
| B2 | DF | AA61HM | 467 | 2.590 | 0.394 | 1.04% | 4 | 4 | 0.9853 | 2000, 1333, 889, 593, 395, 263, 176, 117 | 1.5 | YES | | | SLS-B9 |
| B3 | DF | AA61HM | 392 | 2.174 | 0.383 | 1.33% | 4 | 4 | 0.9724 | 2000, 1333, 889, 593, 395, 263, 176, 117 | 1.5 | YES | | | SLS-B10 |
| ***ECBC*** | | | | | | | | | | | | | | | |
| AA61ME-A1 | RF | AA61ME | 175 | 0.969 | 0.256 | 7.03% | 1 | 6 | 0.7065 | 1000, 100, 10, 1, 0.1, 0.01, 0.001, 0.0001 | 10 | RF | range finder | | SLS-P9 |
| AA61ME-B1 | DF | AA61ME | 589 | 3.268 | 0.344 | 6.13% | 2 | 2 | 0.9566 | 2000, 930, 433, 201, 93.6, 43.5, 20.2, 9.4 | 2.15 | YES | | | SLS-P30 |
| AA61ME-B2 | DF | AA61ME | 711 | 3.947 | 0.304 | 4.93% | 2 | 6 | 0.9182 | 2000, 930, 433, 201, 93.6, 43.5, 20.2, 9.4 | 2.15 | YES | | | SLS-P32 |
| AA61ME-B3 | DF | AA61ME | 637 | 3.534 | 0.345 | 0.84% | 2 | 4 | 0.9244 | 2000, 930, 433, 201, 93.6, 43.5, 20.2, 9.4 | 2.15 | YES | | | SLS-P34 |
| ***FRAME*** | | | | | | | | | | | | | | | |
| FAL.3T3.JA.A1.21.05.04 | RF | AA61JA | 1110 | 6.169 | 0.190 | 4.35% | 0 | 1 | 0.5653 | 1000, 100, 10, 1, 0.1, 0.01, 0.001, 0.0001 | 10 | RF | range finder; no points 0 - 50% | | FAL.3T3.SLS.21.05.04 |
| FAL.3T3.JA.B1.04.06.04 | DF | AA61JA | 1290 | 7.149 | 0.358 | 12.22% | 2 | 6 | 0.9869 | 2500, 1701, 1157, 787, 535, 364, 248, 169 | 1.47 | YES | | | FAL.3T3.SLS.04.06.04 |

# 3T3 NRU Reference Substance Data

| Experiment ID 3T3 Cells | Assay Type[1] | Substance ID | $IC_{50}$ (ug/mL) | $IC_{50}$ (mM) | Mean VC OD[2] | Difference of right/left VC from mean VC[3] | Number of Points 0 - 50 %[4] | Number of Points 50 - 100 %[5] | $R^2$ [6] | Exposure Concentrations (ug/mL)[7] | Dilution Factor[8] | Acceptable Tests[9] | Rationale for Unacceptability | Notes | PC ID |
|---|---|---|---|---|---|---|---|---|---|---|---|---|---|---|---|
| FAL.3T3.JA.B2.18.06.04 | RF | AA61JA | 1500 | 8.342 | 0.471 | 8.60% | 1 | 5 | 0.9217 | 2500, 1701, 1157, 787, 535, 364, 248, 169 | 1.47 | YES | | outlier removed by SD from VC1 | FAL.3T3.SLS.18.06.04 |
| FAL.3T3.JA.B3.08.07.04 | DF | AA61JA | 912 | 5.061 | 0.262 | 0.73% | 3 | 5 | 0.9499 | 2500, 1701, 1157, 787, 535, 364, 248, 169 | 1.47 | YES | | | FAL.3T3.SLS.08.07.04 |

## AMINOPTERIN

| | | | | | | | | | | | | | | | |
|---|---|---|---|---|---|---|---|---|---|---|---|---|---|---|---|
| ***IIVS*** | | | | | | | | | | | | | | | |
| A1 | RF | AA61JD | 0.006 | 0.00001 | 0.449 | 1.25% | 6 | 1 | 0.8361 | 1000, 100, 10, 1, 0.1, 0.01, 0.001, 0.0001 | 10 | RF | range finder | | SLS-A2 |
| B1 | DF | AA61JD | 0.006 | 0.00001 | 0.310 | 1.69% | 4 | 4 | 0.8810 | 0.02, 0.013, 0.0089, 0.0059, 0.0040, 0.0026, 0.0018, 0.0012 | 1.5 | YES | | | SLS-B1 |
| B2 | DF | AA61JD | 0.004 | 0.00001 | 0.402 | 1.66% | 5 | 3 | 0.8854 | 0.02, 0.013, 0.0089, 0.0059, 0.0040, 0.0026, 0.0018, 0.0012 | 1.5 | YES | | | SLS-B2 |
| B3 | DF | AA61JD | 0.003 | 0.00001 | 0.461 | 0.11% | 6 | 2 | 0.8529 | 0.02, 0.013, 0.0089, 0.0059, 0.0040, 0.0026, 0.0018, 0.0012 | 1.5 | NO | PC failed | | SLS-B3 |
| B4 | DF | AA61JD | 0.005 | 0.00001 | 0.300 | 0.33% | 5 | 1 | 0.8025 | 0.02, 0.013, 0.0089, 0.0059, 0.0040, 0.0026, 0.0018, 0.0012 | 1.5 | YES | | | SLS-B4 |
| ***ECBC*** | | | | | | | | | | | | | | | |
| AA61MB-A1 | RF | AA61MB | 0.012 | 0.00003 | 0.373 | 14.44% | 6 | 2 | 0.6985 | 1000, 100, 10, 1.0, 0.1, 0.01, 0.001, 0.0001 | 10 | RF | low r2; range finder | | SLS-P4 |
| AA61MB-A2 | RF | AA61MB | 0.014 | 0.00003 | 0.470 | 22.09% | 6 | 1 | 0.7532 | 1000, 100, 10, 1.0, 0.1, 0.01, 0.001, 0.0001 | 10 | NO | low r2;% VC difference > 15; range finder | | SLS-P5 |
| AA61MB-B1 | DF | AA61MB | 0.007 | 0.00002 | 0.435 | 3.5% | 4 | 1 | 0.8625 | 0.1000, 0.0465, 0.0216, 0.0101, 0.0047, 0.0022, 0.0010, 0.0005 | 2.15 | YES | | | SLS-P7 |
| AA61MB-B2 | DF | AA61MB | 0.004 | 0.00001 | 0.400 | 5.46% | 5 | 1 | 0.8409 | 0.0200, 0.0136, 0.0093, 0.0063, 0.0043, 0.0029, 0.0020, 0.0013 | 1.47 | NO | PC failed | | SLS-P9 |
| AA61MB-B3 | DF | AA61MB | 0.005 | 0.00001 | 0.383 | 11.29% | 5 | 1 | 0.8251 | 0.0200, 0.0136, 0.0093, 0.0063, 0.0043, 0.0029, 0.0020, 0.0013 | 1.47 | YES | | | SLS-P11 |
| AA61MB-B4 | DF | AA61MB | 0.005 | 0.00001 | 0.544 | 7.46% | 5 | 2 | 0.8840 | 0.0200, 0.0136, 0.0093, 0.0063, 0.0043, 0.0029, 0.0020, 0.0013 | 1.47 | YES | | | SLS-P14 |
| ***FRAME*** | | | | | | | | | | | | | | | |
| A1PU190603 | RF | AA61PU | 0.146 | 0.00033 | 0.550 | 2.01% | 6 | 0 | 0.6490 | 1000, 100, 10, 1.0, 0.1, 0.01, 0.001, 0.0001 | 10 | RF | PC failed; no points between 50 - 90%; low r2 | | A1SLS190603 |
| FAL.3T3.PU.A2.26.06.03 | RF | AA61PU | NA | NA | 0.446 | 4.4% | 8 | 0 | 0.0669 | 3.50, 2.38, 1.62, 1.10, 0.75, 0.51, 0.35, 0.24 | 1.47 | NO | no points between 10 - 50%; low r2; range finder | | FAL.3T3.SLS.A2.26.06.03 |
| FAL.3T3.PU.B1.03.07.03 | DF | AA61PU | NA | NA | 0.453 | 0.09% | 8 | 0 | NA | 0.100, 0.047, 0.022, 0.010, 0.005, 0.002, 0.001, 0.0005 | 2.13 | NO | PC failed; no points between 10 - 50; r2 not available | | FAL.3T3.SLS.B1.03.07.03 |
| FAL.3T3.B2.PU.10.07.03 | DF | AA61PU | NA | NA | 0.451 | 3.11% | 8 | 0 | 0.0018 | 0.100, 0.047, 0.022, 0.010, 0.005, 0.002, 0.001, 0.0005 | 2.13 | NO | no points between 50 - 90%; low r2 | | FAL.3T3.SLS.10.07.03 |
| FAL.3T3.B7.PU.17.10.03 | DF | AA61PU | 0.00583 | 0.00001 | 0.302 | 10.79% | 1 | 4 | 0.8196 | 0.010, 0.005, 0.002, 0.0010, 0.0005, 0.0002, 0.0001, 0.00005 | 2.5 | YES | | | FAL.3T3.SLS.171003 |
| FAL.3T3.B8.PU.30.10.03 | DF | AA61PU | 0.0129 | 0.00003 | 0.361 | 0.21% | 1 | 4 | 0.9443 | 0.022, 0.010, 0.005, 0.0022, 0.0010, 0.0005, 0.0002, 0.0001 | 2.2 | YES | | | FAL.3T3.SLS.301003 |
| FAL.3T3.B9.PU.31.10.03 | DF | AA61PU | 0.0166 | 0.00004 | 0.289 | 8.80% | 2 | 2 | 0.8698 | 0.046, 0.021, 0.010, 0.0046, 0.0022, 0.001, 0.0005, 0.0002 | 2.2 | YES | | | FAL.3T3.SLS.301003 (should be 311003) |

# 3T3 NRU Reference Substance Data

| Experiment ID 3T3 Cells | Assay Type[1] | Substance ID | $IC_{50}$ (ug/mL) | $IC_{50}$ (mM) | Mean VC OD[2] | Difference of right/left VC from mean VC[3] | Number of Points 0 - 50 %[4] | Number of Points 50 - 100 %[5] | $R^2$ [6] | Exposure Concentrations (ug/mL)[7] | Dilution Factor[8] | Acceptable Tests[9] | Rationale for Unacceptability | Notes | PC ID |
|---|---|---|---|---|---|---|---|---|---|---|---|---|---|---|---|
| **5-AMINOSALICYLIC ACID** | | | | | | | | | | | | | | | |
| ***IIVS*** | | | | | | | | | | | | | | | |
| A1 | RF | AA61GZ | NA | NA | 0.448 | 0.95% | 0 | 5 | 0.7520 | 1000, 100, 10, 1, 0.1, 0.01, 0.001, 0.0001 | 10 | RF | range finder | | SLS-A3 |
| B1 | DF | AA61GZ | 1360 | 8.872 | 0.447 | 3.00% | 1 | 7 | 0.9462 | 1500, 1154, 888, 683, 525, 404, 311, 239 | 1.3 | YES | | | SLS-B6 |
| B2 | DF | AA61GZ | 1610 | 10.520 | 0.451 | 0.98% | 0 | 8 | 0.9642 | 1500, 1154, 888, 683, 525, 404, 311, 239 | 1.3 | NO | no points between 0 - 50% | plates read 15-16 hr late; orignial reading used wrong OD wavelength | SLS-B11 |
| B3 | DF | AA61GZ | 1710 | 11.144 | 0.349 | 4.42% | 2 | 6 | 0.9177 | 2500, 1786, 1276, 911, 651, 465, 332, 237 | 1.4 | YES | | ppt in 2X C1-C3 | SLS-B12 |
| B4 | DF | AA61GZ | NA | NA | NA | NA | NA | NA | NA | NA | NA | NO | PC failed | | SLS-B14 |
| B5 | DF | AA61GZ | 1600 | 10.472 | 0.409 | 0.65% | 2 | 6 | 0.9854 | 2500, 1786, 1276, 911, 651, 465, 332, 237 | 1.4 | YES | | ppt in 2X C1-C2 | SLS-B15 |
| ***ECBC*** | | | | | | | | | | | | | | | |
| AA61KD-A1 | RF | AA61KD | NA | NA | 0.318 | 12.19% | 0 | 4 | NA | 1000, 100, 10, 1, 0.1, 0.01, 0.001, 0.0001 | 10 | RF | range finder | | SLS-11 |
| AA61KD-B1 | DF | AA61KD | 1530 | 10.024 | 0.709 | 2.06% | 1 | 7 | 0.9218 | 2500, 1701, 1157, 787, 535, 364, 248, 169 | 1.47 | YES | | | SLS-P46 |
| AA61KD-B2 | DF | AA61KD | 1240 | 8.110 | 0.413 | 0.16% | 2 | 6 | 0.9375 | 2500, 1701, 1157, 787, 535, 364, 248, 169 | 1.47 | YES | | | SLS-P47 |
| AA61KD-B3 | DF | AA61KD | 1630 | 10.642 | 0.386 | 0.26% | 2 | 6 | 0.9711 | 2500, 1701, 1157, 787, 535, 364, 248, 169 | 1.47 | YES | | | SLS-P49 |
| ***FRAME*** | | | | | | | | | | | | | | | |
| FAL.3T3.PA.A1.21.05.04 | RF | AA61PA | NA | NA | 0.394 | 4.59% | 0 | 1 | 0.5658 | 10000, 1000, 100, 10, 1, 0.1, 0.01, 0.001 | 10 | RF | range finder | | FAL.3T3.SLS.21.05.04 |
| FAL.3T3.PA.B1.04.06.04 | DF | AA61PA | 1770 | 11.535 | 0.501 | 0.57% | 1 | 7 | 0.9637 | 2500, 1701, 1157, 787, 535, 364, 248, 169 | 1.47 | YES | | | FAL.3T3.SLS.04.06.04 |
| FAL.3T3.PA.B2.18.06.04 | DF | AA61PA | 2010 | 13.123 | 0.491 | 14.06% | 1 | 4 | 0.8978 | 2500, 1701, 1157, 787, 535, 364, 248, 169 | 1.47 | YES | | | FAL.3T3.SLS.18.06.04 |
| FAL.3T3.PA.B3.08.07.04 | DF | AA61PA | 2430 | 15.850 | 0.343 | 1.34% | 1 | 4 | 0.8650 | 2500, 1701, 1157, 787, 535, 364, 248, 169 | 1.47 | YES | | | FAL.3T3.SLS.08.07.04 |
| **AMITRIPTYLINE HCL** | | | | | | | | | | | | | | | |
| ***IIVS*** | | | | | | | | | | | | | | | |
| A1 | RF | AA61RF | 5.45 | 0.017 | 0.327 | 1.25% | 1 | 2 | 0.9939 | 1000, 100, 10, 1, 0.1, 0.01, 0.001, 0.0001 | 10 | RF | range finder | ppt in 2X C1 and 1X C1 | SLS-A1 |
| B1 | DF | AA61RF | 8.83 | 0.03 | 0.349 | 0.19% | 2 | 5 | 0.9858 | 25.0, 16.7, 11.1, 7.41, 4.94, 3.29, 2.19, 1.46 | 1.5 | YES | | | SLS-B1 |
| B2 | DF | AA61RF | 8.35 | 0.03 | 0.344 | 1.92% | 2 | 2 | 0.9464 | 25.0, 16.7, 11.1, 7.41, 4.94, 3.29, 2.19, 1.46 | 1.5 | YES | | | SLS-B2 |
| B3 | DF | AA61RF | 6.24 | 0.02 | 0.357 | 0.02% | 2 | 2 | 0.9701 | 25.0, 16.7, 11.1, 7.41, 4.94, 3.29, 2.19, 1.46 | 1.5 | YES | | | SLS-B3 |
| ***ECBC*** | | | | | | | | | | | | | | | |
| AA61PR-A1 | RF | AA61PR | 10.6 | 0.034 | 0.352 | 8.18% | 0 | 5 | 0.8920 | 1000, 100,10, 1, 0.1, 0.01, 0.001, 0.0001 | 10 | RF | range finder | ppt in 2X C1 and 1X C1 | SLS-P4 |
| AA61PR-B1 | DF | AA61PR | 6.26 | 0.020 | 0.384 | 2.37% | 2 | 4 | 0.9661 | 80.0, 37.2, 17.3, 8.05, 3.74, 1.74, 0.81, 0.38 | 2.15 | YES | | | SLS-P20 |
| AA61PR-B2 | DF | AA61PR | 4.55 | 0.014 | 0.451 | 1.05% | 2 | 5 | 0.9214 | 15.0, 10.2, 6.94, 4.72, 3.21, 2.19, 1.49, 1.01 | 1.47 | YES | | | SLS-P22 |
| AA61PR-B3 | DF | AA61PR | 7.28 | 0.023 | 0.577 | 2.79% | 2 | 4 | 0.9701 | 15.0, 10.2, 6.94, 4.72, 3.21, 2.19, 1.49, 1.01 | 1.47 | YES | | | SLS-P24 |
| ***FRAME*** | | | | | | | | | | | | | | | |
| FAL.3T3.LE.A1.090104 | RF | AA61LE | 12.9 | 0.041 | 0.463 | 1.62% | 1 | 3 | 0.9739 | 1000, 100, 10, 1, 0.1, 0.01, 0.001, 0.0001 | 10 | RF | range finder | ppt in 2X C1 | FAL.3T3.SLS.09/01/04 |

# 3T3 NRU Reference Substance Data

| Experiment ID 3T3 Cells | Assay Type[1] | Substance ID | $IC_{50}$ (ug/mL) | $IC_{50}$ (mM) | Mean VC OD[2] | Difference of right/left VC from mean VC[3] | Number of Points 0 - 50 %[4] | Number of Points 50 - 100 %[5] | $R^2$ [6] | Exposure Concentrations (ug/mL)[7] | Dilution Factor[8] | Acceptable Tests[9] | Rationale for Unacceptability | Notes | PC ID |
|---|---|---|---|---|---|---|---|---|---|---|---|---|---|---|---|
| FAL3T3.LE.B1.16.01.04 | DF | AA61 LE | 10.4 | 0.033 | 0.500 | 7.09% | 3 | 4 | 0.9391 | 100, 46.5, 21.6, 10.1, 4.7, 2.2, 1.0, 0.5 | 2.15 | YES | | | FAL.3T3.SLS.16/01/04 |
| FAL3T3.LE.B2.23.01.04 | DF | AA61LE | 6.48 | 0.021 | 0.347 | 13.33% | 5 | 2 | 0.9709 | 50.0, 34.0, 23.1, 15.7, 10.7, 7.3, 5.0, 3.4 | 1.47 | YES | | | FAL3T3.23-01-04 |
| FAL3T3.LE.B3.30.01.04 | DF | AA61LE | NA | NA | 0.262 | 13.73% | 5 | 3 | NA | 50.0, 34.0, 23.1, 15.7, 10.7, 7.3, 5.0, 3.4 | 1.47 | NO | SD rejects this experiment | serious NR crystal problem; SD rejects this experiment | FAL.3T3.SLS.29/01/04 |
| FAL3T3.LE.B4.06-02-04 | DF | AA61LE | 6.70 | 0.021 | 0.325 | 5.48% | 5 | 3 | 0.9586 | 50.0, 34.0, 23.1, 15.7, 10.7, 7.3, 5.0, 3.4 | 1.47 | YES | | possible NR crystals present; blanks slightly higher than usual | FAL.3T3.SLS.06/02/04 |

## ARSENIC III TRIOXIDE

| | | | | | | | | | | | | | | | |
|---|---|---|---|---|---|---|---|---|---|---|---|---|---|---|---|
| ***IIVS*** | | | | | | | | | | | | | | | |
| A1 Preliminary | RF | AA61FX | 1.50 | 0.008 | 0.409 | 2.18% | 0 | 1 | 0.9861 | 100, 10, 1, 0.1, 0.01, 0.001, 0.0001, 0.00001 | 10 | RF | range finder | | SLS-A1 |
| B1 | DF | AA61FX | 3.17 | 0.016 | 0.529 | 5.69% | 1 | 2 | 0.9787 | 100, 46.4, 21.6, 10.0, 4.64, 2.16, 1.00, 0.46 | 2.16 | YES | | not fully soluble at 200 ug/ml; part. observed at 100 ug/ml | SLS-B1 |
| B2 | DF | AA61FX | 2.47 | 0.012 | 0.485 | 1.29% | 1 | 2 | 0.9875 | 100, 46.4, 21.6, 10.0, 4.64, 2.16, 1.00, 0.46 | 2.16 | YES | | not fully soluble at 200 ug/ml; part. observed at 100 ug/ml | SLS-B2 |
| B3 | DF | AA61FX | 6.63 | 0.034 | 0.599 | 6.19% | 1 | 3 | 0.9597 | 100, 46.4, 21.6, 10.0, 4.64, 2.16, 1.00, 0.46 | 2.16 | YES | | not fully soluble at 200 ug/ml; part. observed at 100 ug/ml | SLS-B3 |
| ***ECBC*** | | | | | | | | | | | | | | | |
| ECBC-3T3-lb-01 AA61KU-A1 | RF | AA61KU | 18.3 | 0.093 | 0.414 | 3.18% | 1 | 2 | 0.6456 | 25, 2.5, 0.25, 0.025, 0.0025,0.00025, 0.000025, 0.0000025 | 10 | RF | range finder | | SLS-P1 |
| ECBC-3T3-lb-02 AA61KU-B1 | DF | AA61KU | 2.39 | 0.012 | 0.340 | 0.32% | 3 | 0 | 0.8812 | 50, 34, 23.1, 15.7, 10.7, 7.3, 5.0, 3.4 | 1.47 | NO | No points between 50 and 90%; PC failed | | SLS-P3 |
| ECBC-3T3-lb-03 AA61KU-B2 | DF | AA61KU | 2.57 | 0.013 | 0.405 | 4.55% | 3 | 1 | 0.9221 | 34.2, 23.2, 15.8, 10.8, 7.3, 5.0, 3.4, 2.3 | 1.47 | NO | PC failed | | SLS-P4 |
| ECBC-3T3-lb-04 AA61KU-B3 | DF | AA61KU | 3.07 | 0.016 | 0.777 | 7.74% | 3 | 2 | 0.9511 | 25.0, 17.0, 11.6, 7.9, 5.4, 3.6, 2.5, 1.7 | 1.47 | YES | | | SLS-P5 |
| ECBC-3T3-lb-05 AA61KU-B4 | DF | AA61KU | 2.53 | 0.013 | 0.419 | 0.20% | 4 | 1 | 0.9580 | 25.0, 17.0, 11.6, 7.9, 5.4, 3.6, 2.5, 1.7 | 1.47 | YES | | | SLS-P7 |
| ECBC-3T3-lb-06 AA61KU-B5 | DF | AA61KU | 2.74 | 0.014 | 0.606 | 3.92% | 2 | 2 | 0.9663 | 25.0, 17.0, 11.6, 7.9, 5.4, 3.6, 2.5, 1.7 | 1.47 | YES | | | SLS-P9 |
| ECBC-3T3-lb-07 AA61KU-B6 | DF | AA61KU | 1.28 | 0.006 | 0.393 | 6.66% | 3 | 1 | 0.9680 | 15.0, 10.2, 6.9, 4.7, 3.2, 2.2, 1.5, 1.0 | 1.47 | YES | | | SLS-P12 |
| ***FRAME*** | | | | | | | | | | | | | | | |
| 1b3T3RF01FALNC | RF | AA61NC | 6.85 | 0.035 | 0.426 | 3.32% | 1 | 4 | 0.9380 | 100, 20, 4, 0.8, 0.16, 0.032, 0.0064, 0.00128 | 5 | RF | range finder | | 1b3T3CTRFALSLS 12/17/02 |
| 1b3T3RF02FALNC | RF | AA61NC | 2.77 | 0.014 | 0.543 | 8.42% | 0 | 0 | 0.6786 | 50, 34, 23.1, 15.7, 10.7, 7.3, 5, 3.4 | 1.47 | RF | range finder | NR crystals in plate | 1b3T3CTRFALSLS 1/7/03 |
| 1b3T3RF02FALNC | RF | AA61NC | 1.48 | 0.007 | 0.247 | 12.73% | 2 | 3 | 0.8760 | 10, 6.8, 4.63, 3.15, 2.14, 1.46, 0.99, 0.67 | 1.47 | RF | range finder | NR crystals in plate; stopped after 1 h | 1b3T3CTRFALSLS 1/8/03 |
| 1b3T3DF01FALNC | DF | AA61NC | 0.328 | 0.002 | 0.669 | 4.88% | 1 | 0 | 0.5431 | 24, 16.33, 11.11, 7.56, 5.14, 3.5, 2.38, 1.61 | 1.47 | NO | No points between 50 & 90% viability; r2 < 0.8 | Didn't reach 50% viability | 1b3T3CTRFALSLS 1/14/03 |
| 1b3T3DF02FALNC | DF | AA61NC | 1.74 | 0.009 | 0.363 | 3.42% | 3 | 0 | 0.9517 | 28.5, 19.39, 13.19, 8.97, 6.1, 4.15, 2.82, 1.92 | 1.47 | NO | No points between 50 & 90% viability; PC failed | Didn't reach 50% viability | 1b3T3CTRFALSLS 1/15/03 |
| 1b3T3DF03FALNC | DF | AA61NC | 1.05 | 0.005 | 0.742 | 0.84% | 3 | 3 | 0.9163 | 7.000, 4.762, 3.239, 2.204, 1.499, 1.020, 0.694, 0.472 | 1.47 | YES | | | 1b3T3CTRFALSLS 1/21/03 |
| 1b3T3DF04FALNC | DF | AA61NC | 1.39 | 0.007 | 0.303 | 15.26% | 2 | 4 | 0.9591 | 7, 4.76, 3.24, 2.20, 1.50, 1.02, 0.69, 0.47 | 1.47 | NO | NR crystals in plate; stopped after 1 h; PC failed | | 1b3T3CTRFALSLS 1/28/03 |
| 1b3T3DF09FALNC | DF | AA61NC | 1.25 | 0.006 | 0.624 | 1.40% | 1 | 3 | 0.9671 | 7, 4.76, 3.24, 2.20, 1.50, 1.02, 0.69, 0.47 | 1.47 | NO | PC failed | | 1b3T3CTRFALSLS 1/29/03 |

# 3T3 NRU Reference Substance Data

| Experiment ID 3T3 Cells | Assay Type[1] | Substance ID | $IC_{50}$ (ug/mL) | $IC_{50}$ (mM) | Mean VC OD[2] | Difference of right/left VC from mean VC[3] | Number of Points 0 - 50 %[4] | Number of Points 50 - 100 %[5] | $R^2$ [6] | Exposure Concentrations (ug/mL)[7] | Dilution Factor[8] | Acceptable Tests[9] | Rationale for Unacceptability | Notes | PC ID |
|---|---|---|---|---|---|---|---|---|---|---|---|---|---|---|---|
| 1b3T3DF06FALNC | DF | AA61NC | 0.984 | 0.005 | 0.569 | 0.76% | 1 | 2 | 0.9099 | 2.500, 1.701, 1.157, 0.787, 0.535, 0.364, 0.248, 0.169 | 1.47 | YES | | | 1b3T3CTRFALSLS 2/403 |
| 1b3T3DF07FALNC | DF | AA61NC | 1.00 | 0.005 | 0.639 | 1.80% | 2 | 3 | 0.9303 | 5.000, 3.401, 2.314, 1.574, 1.071, 0.728, 0.496, 0.337 | 1.47 | YES | | | 1b3T3CTRFALSLS 2/5/03 |
| 1b3T3DF07(2)FALNC | DF | AA61NC | 1.14 | 0.006 | 0.651 | 2.48% | 2 | 2 | 0.9256 | 7, 4.76, 3.24, 2.20, 1.50, 1.02, 0.69, 0.47 | 1.47 | YES | | | 1b3T3CTRFALSLS 2/5/03 |
| **ATROPINE SULFATE** | | | | | | | | | | | | | | | |
| ***IIVS*** | | | | | | | | | | | | | | | |
| A1 | RF | AA61NE | 50.4 | 0.072 | 0.391 | 0.62% | 1 | 2 | 0.9941 | 10000, 1000, 100, 10, 1, 0.1, 0.01, 0.001 | 10 | RF | range finder | | SLS-A4 |
| B1 | DF | AA61NE | 63.8 | 0.092 | 0.485 | 4.11% | 3 | 5 | 0.8808 | 300, 167, 92.6, 51.4, 28.6, 15.9, 8.82, 4.90 | 1.8 | YES | | outlier removed by study dire | SLS-B4 |
| B2 | DF | AA61NE | 71.1 | 0.102 | 0.374 | 1.70% | 3 | 5 | 0.9230 | 300, 167, 92.6, 51.4, 28.6, 15.9, 8.82, 4.90 | 1.8 | YES | | G11 in VC2 not used; rec'd extra 100ul medium during seeding process;SD removed | SLS-B7 |
| B3 | DF | AA61NE | 75.0 | 0.108 | 0.436 | 3.00% | 2 | 6 | 0.9070 | 300, 167, 92.6, 51.4, 28.6, 15.9, 8.82, 4.90 | 1.8 | YES | | SD note: response curves in 3 valid DF similar & don't follow classic Hill response curve | SLS-B8 |
| ***ECBC*** | | | | | | | | | | | | | | | |
| AA61KX-A1 | RF | AA61KX | 87.9 | 0.127 | 0.390 | 11.37% | 1 | 5 | 0.9664 | 10000,1000, 100, 10, 1,0.1, 0.01, 0.001 | 10 | RF | range finder | | SLS-P13 |
| AA61KX-B1 | DF | AA61KX | 31.3 | 0.045 | 0.510 | 7.40% | 3 | 3 | 0.9452 | 1000, 465, 216, 101, 46.8, 21.8, 10.1, 4.71 | 2.15 | YES | | | SLS-P31 |
| AA61KX-B2 | DF | AA61KX | 43.4 | 0.062 | 0.465 | 9.34% | 3 | 4 | 0.9483 | 1000, 465, 216, 101, 46.8, 21.8, 10.1, 4.71 | 2.15 | YES | | | SLS-P33 |
| AA61KX-B3 | DF | AA61KX | 87.5 | 0.126 | 0.686 | 5.74% | 3 | 4 | 0.9275 | 1000, 465, 216, 101, 46.8, 21.8, 10.1, 4.71 | 2.15 | YES | | | SLS-P35 |
| ***FRAME*** | | | | | | | | | | | | | | | |
| FAL.3T3.FU.A1.10.09.04 | RF | AA61FU | 461 | 0.664 | 0.384 | 4.08% | 1 | 0 | 0.9358 | 10000, 1000, 100, 10, 1, 0.1, 0.01, 0.001 | 10 | RF | range finder; no points between 50 - 100% | | FAL.3T3.SLS.10.09.04 |
| FAL.3T3.FU.B1.16.09.04 | DF | AA61FU | 160 | 0.231 | 0.350 | 1.76% | 5 | 3 | 0.9137 | 1000, 680, 463, 315, 214, 146, 99.1, 67.4 | 1.47 | YES | | outlier removed by SD | FAL.3T3.SLS.16.09.04 |
| FAL.3T3.FU.B2.15.10.04 | DF | AA61FU | 153 | 0.221 | 0.342 | 2.06% | 4 | 4 | 0.9807 | 500, 340, 231, 157, 107, 72.8, 49.6, 33.7 | 1.47 | YES | | | FAL.3T3.SLS.15.10.04 |
| FAL.3T3.FU.B3.28.10.04 | DF | AA61FU | 85.5 | 0.123 | 0.184 | 5.35% | 5 | 3 | 0.9528 | 500, 340, 231, 157, 107, 72.8, 49.6, 33.7 | 1.47 | YES | | | FAL.3T3.SLS.28.10.04 |
| **BORIC ACID** | | | | | | | | | | | | | | | |
| ***IIVS*** | | | | | | | | | | | | | | | |
| A1 | RF | AA61LD | 979 | 15.842 | 0.433 | 3.67% | 1 | 6 | 0.9184 | 1000, 100, 10, 1, 0.1, 0.01, 0.001, 0.0001 | 10 | RF | range finder | | SLS-A4 |
| B1 | DF | AA61LD | 1090 | 17.571 | 0.403 | 0.04% | 4 | 4 | 0.9456 | 5000, 3125, 1953, 1221, 763, 477, 298, 186 | 1.6 | YES | | | SLS-B6 |
| B2 | DF | AA61LD | 685 | 11.087 | 0.486 | 2.50% | 5 | 3 | 0.9462 | 5000, 3125, 1953, 1221, 763, 477, 298, 186 | 1.6 | YES | | plates read 15-16 hr late; orignial reading used wrong OD wavelength | SLS-B11 |
| B3 | DF | AA61LD | 1830 | 29.635 | 0.349 | 0.52% | 2 | 4 | 0.9129 | 5000, 3125, 1953, 1221, 763, 477, 298, 186 | 1.6 | YES | | | SLS-B12 |
| ***ECBC*** | | | | | | | | | | | | | | | |
| AA61JH-A1 | RF | AA61JH | 897 | 14.514 | 0.329 | 0.46% | 2 | 6 | 0.8984 | 10000,1000, 100, 10, 1,0.1, 0.01, 0.001 | 10 | RF | range finder | | SLS-P12 |

# 3T3 NRU Reference Substance Data

| Experiment ID 3T3 Cells | Assay Type[1] | Substance ID | $IC_{50}$ (ug/mL) | $IC_{50}$ (mM) | Mean VC OD[2] | Difference of right/left VC from mean VC[3] | Number of Points 0 - 50 %[4] | Number of Points 50 - 100 %[5] | $R^2$ [6] | Exposure Concentrations (ug/mL)[7] | Dilution Factor[8] | Acceptable Tests[9] | Rationale for Unacceptability | Notes | PC ID |
|---|---|---|---|---|---|---|---|---|---|---|---|---|---|---|---|
| AA61JH-B1 | DF | AA61JH | 1150 | 18.570 | 0.477 | 1.66% | 3 | 5 | 0.9684 | 10000, 4651, 2163, 1006, 468, 218, 101, 47.1 | 2.15 | YES | | | SLS-P31 |
| AA61JH-B2 | DF | AA61JH | 1290 | 20.932 | 0.423 | 0.14% | 4 | 4 | 0.9524 | 10000, 4651, 2163, 1006, 468, 218, 101, 47.1 | 2.15 | YES | | | SLS-P33 |
| AA61JH-B3 | DF | AA61JH | 2050 | 33.098 | 0.691 | 5.22% | 3 | 3 | 0.9571 | 10000, 4651, 2163, 1006, 468, 218, 101, 47.1 | 2.15 | YES | | | SLS-P35 |
| ***FRAME*** | | | | | | | | | | | | | | | |
| FAL.3T3.GR.A1.10.09.04 | RF | AA61GR | 2000 | 32.270 | 0.394 | 4.32% | 1 | 1 | 0.8608 | 10000, 1000, 100, 10, 1, 0.1, 0.01, 0.001 | 10 | RF | range finder | | FAL.3T3.SLS.10.09.04 |
| FAL.3T3.GR.B1.16.09.04 | DF | AA61GR | 4320 | 69.791 | 0.351 | 10.82% | 2 | 3 | 0.8630 | 10000, 6803, 4628, 3148, 2142, 1457, 991, 674 | 1.47 | YES | | | FAL.3T3.SLS.16.09.04 |
| FAL.3T3.GR.B2.23.09.04 | DF | AA61GR | 4450 | 71.912 | 0.336 | 3.84% | 2 | 4 | 0.8582 | 10000, 6803, 4628, 3148, 2142, 1457, 991, 674 | 1.47 | YES | | outlier removed bySD | FAL.3T3.SLS.23.09.04 |
| FAL.3T3.GR.B3.14.10.04 | DF | AA61GR | 3190 | 51.618 | 0.319 | 3.58% | 3 | 5 | 0.7925 | 10000, 6803, 4628, 3148, 2142, 1457, 991, 674 | 1.47 | YES | | | FAL.3T3.SLS.14.10.04 |

## BUSULFAN

| | | | | | | | | | | | | | | | |
|---|---|---|---|---|---|---|---|---|---|---|---|---|---|---|---|
| ***IIVS*** | | | | | | | | | | | | | | | |
| A1 | RF | AA61RL | 29.2 | 0.118 | 0.387 | 12.48% | 1 | 6 | 0.8879 | 100, 10, 1, 0.1, 0.01, 0.001, 0.0001, 0.00001 | 10 | RF | range finder | | SLS-A1 |
| B1 | DF | AA61RL | 41.7 | 0.169 | 0.425 | 3.61% | 3 | 5 | 0.8760 | 100, 71.4, 51.0, 36.4, 26.0, 18.6, 13.3, 9.49, | 1.4 | YES | | | SLS-B5 |
| B2 | DF | AA61RL | 44.9 | 0.18 | 0.332 | 5.19% | 5 | 3 | 0.8920 | 500, 278, 154, 85.7, 47.6, 26.5, 14.7, 8.17 | 1.8 | YES | | | SLS-B9 |
| B3 | DF | AA61RL | 44.6 | 0.18 | 0.332 | 3.79% | 4 | 4 | 0.8775 | 500, 278, 154, 85.7, 47.6, 26.5, 14.7, 8.17 | 1.8 | YES | | plate sealer used | SLS-B10 |
| ***ECBC*** | | | | | | | | | | | | | | | |
| AA61LH-A1 | RF | AA61LH | 97.3 | 0.395 | 0.360 | 3.64% | 1 | 5 | 0.8554 | 1000, 100,10, 1, 0.1, 0.01, 0.001, 0.0001 | 10 | RF | range finder | ppt in 2X C1 | SLS-P4 |
| AA61LH-B1 | DF | AA61LH | 57.3 | 0.233 | 0.293 | 3.70% | 3 | 5 | 0.8885 | 500, 233, 108, 50.3, 23.4, 10.88, 5.06, 2.35 | 2.15 | YES | | | SLS-P18 |
| AA61LH-B2 | DF | AA61LH | 44.6 | 0.181 | 0.385 | 6.29% | 3 | 5 | 0.8764 | 500, 233, 108, 50.3, 23.4, 10.88, 5.06, 2.35 | 2.15 | YES | | | SLS-P20 |
| AA61LH-B3 | DF | AA61LH | 19.4 | 0.079 | 0.463 | 0.58% | 5 | 3 | 0.8778 | 500, 233, 108, 50.3, 23.4, 10.88, 5.06, 2.35 | 2.15 | YES | | | SLS-P21 |
| ***FRAME*** | | | | | | | | | | | | | | | |
| FAL.3T3.JE.A1.09/01/04 | RF | AA61JE | 38.7 | 0.156 | 0.677 | 5.72% | 1 | 4 | 0.9065 | 250, 25, 2.5, 0.25, 0.025, 0.0025, 0.00025, 0.000025 | 10 | RF | range finder | | FAL.3T3.SLS.09/01/04 |
| FAL.3T3.JE.A2.16/01/04 | DF | AA61JE | 528 | 2.145 | 0.597 | 9.65% | 1 | 7 | 0.7176 | 500, 233, 108, 50.3, 23.4, 10.9, 5.1, 2.4 | 2.15 | YES | | | FAL.3T3.SLS.16/01/04 |
| FAL.3T3.JE.B1.23/01/04 | DF | AA61JE | 234 | 0.952 | 0.361 | 10.07% | 1 | 6 | 0.9558 | 500, 233, 108, 50.3, 23.4, 10.9, 5.1, 2.4 | 2.15 | YES | | morphological changes seen at C5 but not noted in NRU | FAL3T3.23-01-04 |
| FAL.3T3.JE.B2.30/01/04 | DF | AA61JE | NA | NA | 0.266 | 3.00% | 0 | 6 | NA | 500, 233, 108, 50.3, 23.4, 10.9, 5.1, 2.4 | 2.15 | NO | no points between 0-50; SD rejects this experiment | serious NR crystal problem; SD rejects this experiment | FAL.3T3.SLS.29/01/04 |
| FAL.3T3.JE.B3.06-02-04 | DF | AA61JE | 202 | 0.819 | 0.308 | 7.09% | 1 | 7 | 0.8537 | 500, 233, 108, 50.3, 23.4, 10.9, 5.1, 2.4 | 2.15 | YES | | possible NR crystals present; blanks slightly higher than usual | FAL.3T3.SLS.06/02/04 |

# 3T3 NRU Reference Substance Data

| Experiment ID 3T3 Cells | Assay Type[1] | Substance ID | $IC_{50}$ (ug/mL) | $IC_{50}$ (mM) | Mean VC $OD^2$ | Difference of right/left VC from mean VC[3] | Number of Points 0 - 50 %[4] | Number of Points 50 - 100 %[5] | $R^2$ [6] | Exposure Concentrations (ug/mL)[7] | Dilution Factor[8] | Acceptable Tests[9] | Rationale for Unacceptability | Notes | PC ID |
|---|---|---|---|---|---|---|---|---|---|---|---|---|---|---|---|
| **CADMIUM II CHLORIDE** | | | | | | | | | | | | | | | |
| ***IIVS*** | | | | | | | | | | | | | | | |
| A1 | RF | AA61NK | 0.462 | 0.003 | 0.442 | 2.10% | 1 | 3 | 0.9959 | 100, 10, 1, 0.1, 0.01, 0.001, 0.0001, 0.00001 | 10 | RF | range finder | | SLS-A1 |
| B1 | DF | AA61NK | 1.31 | 0.007 | 0.325 | 0.39% | 2 | 5 | 0.9811 | 3.0, 2.0, 1.33, 0.889, 0.593, 0.395, 0.263, 0.176 | 1.5 | YES | | | SLS-B1 |
| B2 | DF | AA61NK | 0.575 | 0.003 | 0.382 | 8.48% | 3 | 4 | 0.9735 | 3.0, 2.0, 1.33, 0.889, 0.593, 0.395, 0.263, 0.176 | 1.5 | YES | | | SLS-B2 |
| B3 | DF | AA61NK | 0.529 | 0.003 | 0.407 | 1.25% | 4 | 3 | 0.9907 | 3.0, 2.0, 1.33, 0.889, 0.593, 0.395, 0.263, 0.176 | 1.5 | NO | PC failed | | SLS-B3 |
| B4 | DF | AA61NK | 0.565 | 0.003 | 0.336 | 4.71% | 3 | 4 | 0.9832 | 3.0, 2.0, 1.33, 0.889, 0.593, 0.395, 0.263, 0.176 | 1.5 | YES | | | SLS-B4 |
| ***ECBC*** | | | | | | | | | | | | | | | |
| AA61KR-A1 | RF | AA61KR | 0.620 | 0.003 | 0.346 | 0.53% | 0 | 0 | 0.9671 | 1000, 100, 10, 1.0, 0.1, 0.01, 0.001, 0.0001 | 10 | RF | no points between 10 -90%; range finder | | SLS-P4 |
| AA61KR-B1 | DF | AA61KR | 0.514 | 0.003 | 0.542 | 7.85% | 2 | 4 | 0.8434 | 2.0, 1.361, 0.926, 0.630, 0.428, 0.291, 0.198, 0.135 | 1.47 | YES | | | SLS-P6 |
| AA61KR-B2 | DF | AA61KR | 0.530 | 0.003 | 0.496 | 3.06% | 3 | 4 | 0.9625 | 2.0, 1.361, 0.926, 0.630, 0.428, 0.291, 0.198, 0.135 | 1.47 | YES | | | SLS-P7 |
| AA61KR-B3 | DF | AA61KR | 0.406 | 0.002 | 0.389 | 3.87% | 2 | 3 | 0.9474 | 2.0, 1.361, 0.926, 0.630, 0.428, 0.291, 0.198, 0.135 | 1.47 | YES | | | SLS-P10 |
| ***FRAME*** | | | | | | | | | | | | | | | |
| A1JP190603 | RF | AA61JP | 0.973 | 0.005 | 0.523 | 1.02% | 1 | 0 | 0.9777 | 1000, 100, 10, 1.0, 0.1, 0.01, 0.001, 0.0001 | 10 | RF | range finder | | A1SLS190603 |
| FAL.3T3.JP.B1 .26.06.03 | RF | AA61JP | 0.547 | 0.003 | 0.463 | 3.71% | 1 | 2 | 0.9748 | 5.0, 3.4, 2.3, 1.5, 1.1, 0.7, 0.5, 0.3 | 1.47 | YES | | | FAL.3T3.SLS.A2.26.06.03 |
| FAL.3T3.JP.B2.03.07.03 | DF | AA61JP | 0.817 | 0.004 | 0.364 | 4.50% | 1 | 1 | 0.9422 | 3.0, 2.04, 1.39, 0.94, 0.64, 0.44, 0.30, 0.20 | 1.47 | NO | PC failed | | FAL.3T3.SLS.B1.03.07.03 |
| FAL.3T3.B3.JP.10.07.03 | DF | AA61JP | 0.343 | 0.002 | 0.484 | 1.25% | 2 | 2 | 0.9894 | 3.0, 2.04, 1.39, 0.94, 0.64, 0.44, 0.30, 0.20 | 1.47 | YES | | | FAL.3T3.SLS.10.07.03 |
| FAL.3T3.B4.JP.17.07.03 | DF | AA61JP | 0.309 | 0.002 | 0.549 | 0.47% | 2 | 2 | 0.9837 | 3, 2.04, 1.39, 0.94, 0.64, 0.44, 0.30, 0.20 | 1.47 | YES | | | FAL.3T3.SLS.17.07.03 |
| **CAFFEINE** | | | | | | | | | | | | | | | |
| ***IIVS*** | | | | | | | | | | | | | | | |
| A1 | RF | AA61JM | 176 | 0.905 | 0.439 | 6.89% | 1 | 1 | 0.9381 | 10000, 1000, 100, 10, 1, 0.1, 0.01, 0.001 | 10 | RF | range finder | | SLS-A1 |
| B1 | DF | AA61JM | 183 | 0.941 | 0.510 | 0.72% | 4 | 4 | 0.9939 | 1000, 625, 391, 244, 153, 95.4, 59.6, 37.3 | 1.6 | YES | | | SLS-B4 |
| B2 | DF | AA61JM | 208 | 1.073 | 0.379 | 8.66% | 4 | 4 | 0.9793 | 1000, 625, 391, 244, 153, 95.4, 59.6, 37.3 | 1.6 | YES | | outlier removed bySD | SLS-B7 |
| B3 | DF | AA61JM | 183 | 0.944 | 0.452 | 1.60% | 4 | 4 | 0.9857 | 1000, 625, 391, 244, 153, 95.4, 59.6, 37.3 | 1.6 | YES | | | SLS-B8 |
| ***ECBC*** | | | | | | | | | | | | | | | |
| AA61NU-A1 | RF | AA61NU | 119 | 0.613 | 0.457 | 8.10% | 1 | 5 | 0.9548 | 10000, 1000, 100,10, 1, 0.1, 0.01, 0.001 | 10 | RF | range finder | | SLS-P3 |
| AA61NU-B1 | DF | AA61NU | 130 | 0.668 | 0.469 | 0.04% | 3 | 4 | 0.9366 | 1000, 465, 216, 101, 46.8, 21.8, 10.1, 4.7 | 2.15 | YES | | | SLS-P17 |
| AA61NU-B2 | DF | AA61NU | 148 | 0.760 | 0.539 | 2.01% | 3 | 5 | 0.9798 | 1000, 465, 216, 101, 46.8, 21.8, 10.1, 4.7 | 2.15 | YES | | | SLS-P19 |
| AA61NU-B3 | DF | AA61NU | 122 | 0.631 | 0.543 | 0.37% | 3 | 5 | 0.9791 | 1000, 465, 216, 101, 46.8, 21.8, 10.1, 4.7 | 2.15 | YES | | | SLS-P22 |

# 3T3 NRU Reference Substance Data

| Experiment ID 3T3 Cells | Assay Type[1] | Substance ID | $IC_{50}$ (ug/mL) | $IC_{50}$ (mM) | Mean VC OD[2] | Difference of right/left VC from mean VC[3] | Number of Points 0 - 50 %[4] | Number of Points 50 - 100 %[5] | $R^2$ [6] | Exposure Concentrations (ug/mL)[7] | Dilution Factor[8] | Acceptable Tests[9] | Rationale for Unacceptability | Notes | PC ID |
|---|---|---|---|---|---|---|---|---|---|---|---|---|---|---|---|
| ***FRAME*** | | | | | | | | | | | | | | | |
| FAL.3T3.GW.A1.09/01/04 | RF | AA61GW | 198 | 1.018 | 0.632 | 5.54% | 1 | 6 | 0.8800 | 10000, 1000, 100, 10, 1, 0.1, 0.01, 0.001 | 10 | RF | range finder | | FAL.3T3.SLS.09/01/04 |
| FAL.3T3.GW.A2.16.01.04 revised by NICEATM; bottom set to 0 as constant | DF | AA61GW | 67.9 | 0.350 | 1.046 | 2.64% | 6 | 2 | 0.9544 | 5000, 2325.6, 1081.7, 503.1, 234.0, 108.8, 50.6, 23.5 | 2.15 | YES | | | FAL.3T3.SLS.16/01/04 |
| FAL.3T3.GW.B1.23.01.04 revised by NICEATM; bottom set to 0 as constant | DF | AA61GW | 228 | 1.174 | 0.562 | 0.19% | 3 | 4 | 0.9827 | 5000, 1582, 501, 158, 50.1, 15.9, 5.02, 1.59 | 3.16 | YES | | | FAL3T3.23-01-04 |
| FAL.3T3.GW.B2.30.01.04 | DF | AA61GW | NA | NA | 0.315 | 1.72% | 2 | 4 | NA | 5000, 1587, 504, 160, 51, 16, 5.1, 1.6 | 3.15 | NO | SD rejects this experiment | serious NR crystal problem; SD rejects this experiment | FAL.3T3.SLS.29/01/04 |
| FAL.3T3.GW.B3.06-02-04 | DF | AA61GW | 176 | 0.907 | 0.460 | 3.57% | 3 | 5 | 0.9731 | 5000, 1587, 504, 160, 51, 16, 5.1, 1.6 | 3.15 | YES | | | FAL.3T3.SLS.06/02/04 |

## CARBAMAZEPINE

| | | | | | | | | | | | | | | | |
|---|---|---|---|---|---|---|---|---|---|---|---|---|---|---|---|
| ***IIVS*** | | | | | | | | | | | | | | | |
| A1 | RF | AA61NB | NA | NA | 0.281 | 6.74% | 0 | 4 | NA | 10.0, 1.0, 0.1, 0.01, 0.001, 0.0001, 0.00001, 0.000001 | 10 | RF | range finder | | SLS-A5 |
| B1 | DF | AA61NB | 164 | 0.694 | 0.397 | 2.68% | 0 | 8 | 0.5447 | 50.0, 38.5, 29.6, 22.8, 17.5, 13.5, 10.4, 7.97 | 1.3 | NO | no points between 0 - 50% | | SLS-B6 |
| B2 | DF | AA61NB | 88.7 | 0.375 | 0.381 | 8.51% | 6 | 1 | 0.9179 | 300, 250, 208, 174, 145, 121, 100, 83.7 | 1.2 | YES | | C1 data removed from Hill analyses; plates read 15-16 hr late; orignial reading used wrong OD wavelength | SLS-B11 |
| B3 | DF | AA61NB | 104 | 0.441 | 0.318 | 1.57% | 3 | 5 | 0.9379 | 200, 154, 118, 91.0, 70.0, 53.9, 41.4, 31.9 | 1.3 | YES | | | SLS-B13 |
| B4 | DF | AA61NB | NA | NA | NA | NA | NA | NA | NA | NA | NA | NO | PC failed | | SLS-B14 |
| B4 (should be B5) | DF | AA61NB | 82.6 | 0.350 | 0.403 | 5.68% | 4 | 4 | 0.9465 | 200, 154, 118, 91.0, 70.0, 53.9, 41.4, 31.9 | 1.3 | YES | | | SLS-B15 |
| ***ECBC*** | | | | | | | | | | | | | | | |
| AA61LX-A1 | RF | AA61LX | 88.9 | 0.376 | 0.438 | 9.61% | 1 | 0 | 0.8266 | 100, 10, 1, 0.1, 0.01, 0.001, 0.0001, 0.00001 | 10 | RF | range finder | | SLS-16 |
| AA61LX-B1 | DF | AA61LX | 93.8 | 0.397 | 0.601 | 3.55% | 3 | 5 | 0.9413 | 250, 170, 116, 78.7, 53.5, 36.4, 24.8, 16.9 | 1.47 | YES | | | SLS-P45 |
| AA61LX-B2 | DF | AA61LX | 85.1 | 0.360 | 0.614 | 1.82% | 2 | 6 | 0.9155 | 250, 170, 116, 78.7, 53.5, 36.4, 24.8, 16.9 | 1.47 | YES | | | SLS-P46 |
| AA61LX-B3 | DF | AA61LX | 70.1 | 0.297 | 0.314 | 9.73% | 3 | 5 | 0.9105 | 170, 116, 78.7, 53.5, 36.4, 24.8, 16.8, 11.5 | 1.47 | YES | | | SLS-P48 |
| ***FRAME*** | | | | | | | | | | | | | | | |
| FAL.3T3.HD.A1.21.10.04 | RF | AA61HD | 107 | 0.451 | 0.190 | 1.01% | 1 | 1 | 0.9436 | 1000, 100, 10, 1.0, 0.1, 0.01, 0.001, 0.0001 | 10 | RF | range finder | outliers removed by SD; ppt in 1X C1 and 2X C1 | FAL.3T3.SLS.21.10.04 |
| FAL.3T3.HD.B1.11.11.04 | DF | AA61HD | 217 | 0.917 | 0.217 | 2.35% | 2 | 1 | 0.7684 | 1000, 318, 101, 32.0, 10.2, 3.2, 1.0, 0.3 | 3.15 | YES | | ppt in 2X C1-C2; &1X in C1 | FAL.3T3.SLS.10.11.04 |
| FAL.3T3.HD.B3.18.11.04 (should be B2 and 19.11.04) | DF | AA61HD | 130 | 0.550 | 0.237 | 4.35% | 3 | 2 | 0.9861 | 1000, 465, 216, 101, 46.8, 21.8, 10.1, 4.7 | 2.15 | YES | | ppt in 2X C1-C2 & 1X in C1-C2 | FAL.3T3.SLS.19.11.04 |
| FAL.3T3.HD.B3.18.11.04 | DF | AA61HD | 110 | 0.466 | 0.241 | 0.24% | 3 | 1 | 0.9107 | 1000, 465, 216, 101, 46.8, 21.8, 10.1, 4.7 | 2.15 | YES | | ppt in 2X C1-C2 & 1X in C1-C3; | FAL.3T3.SLS.25.11.04 |

## CARBON TETRACHLORIDE

| | | | | | | | | | | | | | | | |
|---|---|---|---|---|---|---|---|---|---|---|---|---|---|---|---|
| ***IIVS*** | | | | | | | | | | | | | | | |
| A1 | RF | AA61JK | NA | NA | 0.349 | 15.06% | 0 | 2 | NA | 1000, 100, 10, 1, 0.1, 0.01, 0.001, 0.0001 | 10 | RF | range finder | ppt in 2X C1-C3 | SLS-A2 |
| B1 | DF | AA61JK | NA | NA | 0.391 | 6.82% | 0 | 5 | NA | 2500, 1923, 1479, 1138, 875, 673, 518, 398 | 1.3 | NO | no points between 0-50% | ppt in 2X C1-C3 | SLS-B6 |

# 3T3 NRU Reference Substance Data

| Experiment ID 3T3 Cells | Assay Type[1] | Substance ID | $IC_{50}$ (ug/mL) | $IC_{50}$ (mM) | Mean VC OD[2] | Difference of right/left VC from mean VC[3] | Number of Points 0 - 50 %[4] | Number of Points 50 - 100 %[5] | $R^2$ [6] | Exposure Concentrations (ug/mL)[7] | Dilution Factor[8] | Acceptable Tests[9] | Rationale for Unacceptability | Notes | PC ID |
|---|---|---|---|---|---|---|---|---|---|---|---|---|---|---|---|
| B2 | DF | AA61JK | NA | NA | 0.394 | 7.97% | 0 | 1 | NA | 2500, 1923, 1479, 1138, 875, 673, 518, 398 | 1.3 | NO | no points between 0-50% | ppt in 2X C1-C8; no toxicity detected | SLS-B9 |
| B3 | DF | AA61JK | NA | NA | 0.368 | 3.76% | 0 | 5 | NA | 2500, 1923, 1479, 1138, 875, 673, 518, 398 | 1.3 | NO | no points between 0-50% | ppt in 2X C1-C8; some toxicity detected; C1 has lower toxicity than C2 | SLS-B10 |
| ***ECBC*** | | | | | | | | | | | | | | | |
| AA61NZ-A1 | RF | AA61NZ | NA | NA | 0.328 | 16.23% | 0 | 6 | NA | 1000, 100, 10, 1, 0.1, 0.01, 0.001, 0.0001 | 10 | RF | range finder | | SLS-P9 |
| AA61NZ-A2 | RF | AA61NZ | NA | NA | 0.419 | 7.89% | 0 | 1 | NA | 3000, 300, 30, 3, 0.3, 0.03, 0.003, 0.0003 | 10 | RF | range finder | | SLS-P19 |
| AA61NZ-B1 | DF | AA61NZ | NA | NA | 0.416 | 2.67% | 0 | 8 | NA | 4500, 3719, 3074, 2540, 2099, 1735, 1434, 1185 | 1.21 | NO | no points between 0 - 50% | | SLS-P65 |
| AA61NZ-B2 | DF | AA61NZ | NA | NA | 0.567 | 3.83% | 0 | 7 | NA | 7000, 5785, 4781, 3951, 3266, 2699, 2230, 1843 | 1.21 | NO | no points between 0 - 50% | dilution factor is 1.21; no points between 0-50%; test would pass due to dilution factor | SLS-P67 |
| AA61NZ-B3 | DF | AA61NZ | NA | NA | 0.536 | 8.16% | 0 | 7 | NA | 7000, 5785, 4781, 3951, 3266, 2699, 2230, 1843 | 1.21 | NO | no points between 0 - 50% | ppt in 2X C1 - C5; oily | SLS-P73 |
| ***FRAME*** | | | | | | | | | | | | | | | |
| FAL.3T3.HC.A1.30/04/04 | RF | AA61HC | NA | NA | 0.179 | 1.46% | 0 | 1 | NA | 1000, 100, 10, 1, 0.1, 0.01, 0.001, 0.0001 | 10 | RF | range finder | | FAL.3T3.SLS.30/04/04 |
| FAL.3T3.HC.B1.06/05/0404 | DF | AA61HC | NA | NA | 0.218 | 2.75% | 0 | 0 | NA | 2500, 1701, 1157, 787, 535, 364, 248, 169 | 1.47 | NO | no points between 0 - 100% | SD ends testing and returns as non-toxic at 2500ug/ml | FAL.3T3.SLS.06/05/04 |
| FAL.3T3.HC.B2.26.11.04 | DF | AA61HC | NA | NA | 0.253 | 12.16% | 0 | 5 | NA | 2500, 1701, 1157, 787, 535, 364, 248, 169 | 1.47 | NO | no points between 0 - 50% | the toxicity curve appears reversed; higher conc. less toxic than lower conc. | FAL.3T3.SLS.26.11.04 |
| FAL.3T3.HC.B3.03.12.04 | DF | AA61HC | 2430 | 15.776 | 0.179 | 3.22% | 1 | 0 | 0.5412 | 2500, 1701, 1157, 787, 535, 364, 248, 169 | 1.47 | NO | no points between 50 - 100% | | FAL.3T3.SLS.03.12.04 |
| FAL.3T3.HC.B4.09.12.04 | DF | AA61HC | NA | NA | 0.286 | 7.61% | 0 | 6 | NA | 2500, 2066, 1708, 1411, 1166, 964, 797, 658 | 1.21 | NO | no points between 0 - 50% | | FAL.3T3.SLS.09.12.04 |

## CHLORAL HYDRATE

| | | | | | | | | | | | | | | | |
|---|---|---|---|---|---|---|---|---|---|---|---|---|---|---|---|
| ***IIVS*** | | | | | | | | | | | | | | | |
| A1 | RF | AA61FJ | 56.2 | 0.340 | 0.469 | 87.75% | 2 | 4 | 0.9868 | 10000, 1000, 100, 10, 1, 0.1, 0.01, 0.001 | 10 | RF | range finder | VC1 ODs < VC2 ODs; VC1 removed from subsequent analysis; volatility issues. | SLS-A2 |
| B1 | DF | AA61FJ | 156 | 0.943 | 0.509 | 2.80% | 2 | 6 | 0.9655 | 500, 278, 154, 85.7, 47.6, 26.5, 14.7, 8.17 | 1.8 | YES | | | SLS-B4 |
| B2 | DF | AA61FJ | 193 | 1.165 | 0.336 | 2.36% | 2 | 5 | 0.9653 | 500, 278, 154, 85.7, 47.6, 26.5, 14.7, 8.17 | 1.8 | YES | | outliers removed by SD; plate sealer used | SLS-B7 |
| B3 | DF | AA61FJ | 162 | 0.981 | 0.447 | 5.20% | 2 | 6 | 0.9613 | 500, 278, 154, 85.7, 47.6, 26.5, 14.7, 8.17 | 1.8 | YES | | plate sealer used | SLS-B8 |
| ***ECBC*** | | | | | | | | | | | | | | | |
| AA61KB-A1 | RF | AA61KB | NA | NA | 0.189 | 94.19% | 3 | 0 | NA | 10000,1000, 100, 10, 1,0.1, 0.01, 0.001 | 10 | RF | range finder | probable volatility problem; VC1 <<< VC2 | SLS-P6 |
| AA61KB-A2 | RF | AA61KB | 107 | 0.648 | 0.295 | 0.25% | 0 | 1 | NA | 100, 10, 1, 0.1, 0.01, 0.001, 0.0001, 0.00001 | 10 | RF | range finder | | SLS-P7 |
| AA61KB-B1 | DF | AA61KB | 160 | 0.965 | 0.474 | 0.63% | 3 | 5 | 0.9590 | 500, 340, 231, 157, 107, 72.8, 49.6, 33.7 | 1.47 | YES | | | SLS-P22 |
| AA61KB-B2 | DF | AA61KB | 160 | 0.969 | 0.703 | 2.49% | 3 | 5 | 0.9682 | 500, 340, 231, 157, 107, 72.8, 49.6, 33.7 | 1.47 | YES | | | SLS-P24 |
| AA61KB-B3 | DF | AA61KB | 133 | 0.806 | 0.588 | 0.17% | 3 | 5 | 0.9604 | 500, 340, 231, 157, 107, 72.8, 49.6, 33.7 | 1.47 | YES | | | SLS-P26 |
| ***FRAME*** | | | | | | | | | | | | | | | |

# 3T3 NRU Reference Substance Data

| Experiment ID 3T3 Cells | Assay Type[1] | Substance ID | $IC_{50}$ (ug/mL) | $IC_{50}$ (mM) | Mean VC $OD^2$ | Difference of right/left VC from mean VC[3] | Number of Points 0 - 50 %[4] | Number of Points 50 - 100 %[5] | $R^2$ [6] | Exposure Concentrations (ug/mL)[7] | Dilution Factor[8] | Acceptable Tests[9] | Rationale for Unacceptability | Notes | PC ID |
|---|---|---|---|---|---|---|---|---|---|---|---|---|---|---|---|
| FAL.3T3.LK.A1.01/04/04 | RF | AA61LK | 711 | 4.300 | 0.271 | 69.44% | 2 | 0 | 0.2684 | 10000, 1000, 100, 10, 1, 0.1, 0.01, 0.001 | 10 | RF | range finder | possible volatility problem | FAL.3T3.SLS.01/04/04 |
| FAL.3T3.LK.B1.29/04/04 | DF | AA61LK | 243 | 1.470 | 0.287 | 5.23% | 2 | 2 | 0.9262 | 1000, 465, 216, 101, 46.8, 21.8, 10.1, 4.7 | 2.15 | YES | | NR crystals; high background | FAL.3T3.SLS.29/04/04 |
| FAL.3T3.LK.B2.06/05/04 | DF | AA61LK | 265 | 1.605 | 0.313 | 8.07% | 4 | 4 | 0.9706 | 1000, 680, 463, 315, 214, 146, 99.1, 67.4 | 1.47 | YES | | | FAL.3T3.SLS.06/05/04 |
| FAL.3T3.LK.B3.20/05/04 | DF | AA61LK | 1450 | 8.739 | 0.347 | 12.28% | 0 | 1 | 0.9010 | 2000, 1361, 926, 630, 428, 291, 198, 135 | 1.47 | NO | no points between 0 - 50% | curve very different compared to other curves | FAL.3T3.SLS.20/05/04 |
| FAL.3T3.LK.B4.27/05/04 | DF | AA61LK | 215 | 1.302 | 0.412 | 4.39% | 4 | 4 | 0.9575 | 1000, 680, 463, 315, 214, 146, 99.1, 67.4 | 1.47 | YES | | | FAL.3T3.SLS.27/05/04 |

## CHLORAMPHENICOL

| | | | | | | | | | | | | | | | |
|---|---|---|---|---|---|---|---|---|---|---|---|---|---|---|---|
| ***IIVS*** | | | | | | | | | | | | | | | |
| A1 | RF | AA61GJ | 98.9 | 0.306 | 0.323 | 27.15% | 1 | 1 | 0.1298 | 100, 10, 1, 0.1, 0.01, 0.001, 0.0001, 0.00001 | 10 | RF | range finder | | SLS-A1 |
| B1 | DF | AA61GJ | 187 | 0.579 | 0.307 | 4.85% | 2 | 6 | 0.9661 | 558, 310, 172, 95.7, 53.2, 29.5, 16.4, 9.11 | 1.8 | YES | | | SLS-B1 |
| B2 | DF | AA61GJ | 148 | 0.458 | 0.421 | 0.91% | 3 | 5 | 0.9649 | 558, 310, 172, 95.7, 53.2, 29.5, 16.4, 9.11 | 1.8 | YES | | | SLS-B2 |
| B3 | DF | AA61GJ | 142 | 0.439 | 0.428 | 0.12% | 3 | 5 | 0.9668 | 558, 310, 172, 95.7, 53.2, 29.5, 16.4, 9.11 | 1.8 | NO | PC failed | | SLS-B3 |
| B3 with plate cover | DF | AA61GJ | 171 | 0.529 | 0.345 | 4.49% | 2 | 5 | 0.9683 | 558, 310, 172, 95.7, 53.2, 29.5, 16.4, 9.11 | 1.8 | NO | PC failed | | SLS-B3 |
| B4 | DF | AA61GJ | 133 | 0.412 | 0.350 | 3.69% | 3 | 5 | 0.9171 | 593, 329, 183, 102, 56.5, 31.4, 17.4, 9.69 | 1.8 | YES | | | SLS-B4 |
| ***ECBC*** | | | | | | | | | | | | | | | |
| AA61JS-A1 | RF | AA61JS | 54.5 | 0.169 | 0.401 | 14.20% | 1 | 4 | 0.7119 | 1000, 100, 10, 1.0, 0.1, 0.01, 0.001, 0.0001 | 10 | RF | low r2; range finder | | SLS-P4 |
| AA61JS-B1 | DF | AA61JS | 88.5 | 0.274 | 0.440 | 20.33% | 2 | 3 | 0.8484 | 1000, 300, 100, 30, 10, 3, 1, 0.3 | 3.33 | NO | % VC difference > 15; range finder | | SLS-P6 |
| AA61JS-B2 | DF | AA61JS | 39.1 | 0.121 | 0.461 | 1.90% | 2 | 4 | 0.9618 | 1000, 465.1, 216.3, 100.6, 46.8, 21.8, 10.1, 4.7 | 2.15 | YES | | | SLS-P7 |
| AA61JS-B3 | DF | AA61JS | 61.1 | 0.189 | 0.395 | 1.46% | 3 | 4 | 0.8537 | 1000, 465.1, 216.3, 100.6, 46.8, 21.8, 10.1, 4.7 | 2.15 | YES | | | SLS-P10 |
| AA61JS-B4 | DF | AA61JS | 55.1 | 0.171 | 0.504 | 2.80% | 3 | 4 | 0.9541 | 1000, 465.1, 216.3, 100.6, 46.8, 21.8, 10.1, 4.7 | 2.15 | YES | | | SLS-P14 |
| AA61JS-B5 | DF | AA61JS | 68.5 | 0.212 | 0.448 | 5.20% | 3 | 4 | 0.9401 | 1000, 465.1, 216.3, 100.6, 46.8, 21.8, 10.1, 4.7 | 2.15 | YES | | | SLS-P15 |
| ***FRAME*** | | | | | | | | | | | | | | | |
| A1MU190603 | RF | AA61MU | 568 | 1.758 | 0.550 | 1.44% | 1 | 0 | 0.9021 | 1000, 100, 10, 1.0, 0.1, 0.01, 0.001, 0.0001 | 10 | RF | PC failed; no points between 50 - 90%; range finder | | A1SLS190603 |
| FAL.3T3.MU.B1.26.06.03 | DF | AA61MU | 276 | 0.854 | 0.491 | 13.66% | 5 | 3 | 0.8425 | 1500, 1020, 690, 470, 320, 220, 150, 100 | 1.47 | YES | | | FAL.3T3.SLS.A2.26.06.03 |
| FAL.3T3.MU.B2.03.07.03 | DF | AA61MU | 520 | 1.609 | 0.306 | 3.63% | 2 | 2 | 0.8810 | 1250, 580, 270, 125, 58.5, 27.2, 12.6, 5.9 | 2.15 | NO | PC failed | | FAL.3T3.SLS.B1.03.07.03 |
| FAL.3T3.B3.MU.10.07.03 | DF | AA61MU | NA | NA | 0.486 | 1.00% | 0 | 2 | NA | 50.0, 34.0, 23.1, 15.7, 10.7, 7.3, 5.0, 3.4 | 1.47 | NO | no points between 10 - 50% | | FAL.3T3.SLS.10.07.03 |
| FAL.3T3.B3.MU.17.07.03 (should be B4?) | DF | AA61MU | 237 | 0.733 | 0.455 | 1.91% | 3 | 2 | 0.9782 | 2500, 1160, 540, 251, 117, 54.4, 25.3, 11.7 | 2.15 | YES | | | FAL.3T3.SLS.17.07.03 |
| FAL.3T3.B4.MU.25.07.03 (should be B5?) | DF | AA61MU | 385 | 1.191 | 0.379 | 0.65% | 2 | 2 | 0.9291 | 2500, 1160, 540, 251, 117, 54.4, 25.3, 11.7 | 2.15 | YES | | | FAL.3T3.SLS.25.07.03 |
| FAL.3T3.B5.MU.070803 (should be B6?) | DF | AA61MU | 64.4 | 0.199 | 0.721 | 1.63% | 4 | 4 | 0.8501 | 2500, 1160, 540, 251, 117, 54.4, 25.3, 11.7 | 2.15 | NO | PC failed | | FAL.3T3.SLS.070803 |
| FAL.3T3.MU.B7.120903 | DF | AA61MU | 193 | 0.597 | 0.363 | 0.80% | 4 | 4 | 0.9490 | 2500, 1162, 540, 251, 117, 54.4, 25.3, 11.7 | 2.15 | YES | | | FAL.3T3.SLS.120903 |

# 3T3 NRU Reference Substance Data

| Experiment ID 3T3 Cells | Assay Type[1] | Substance ID | $IC_{50}$ (ug/mL) | $IC_{50}$ (mM) | Mean VC OD[2] | Difference of right/left VC from mean VC[3] | Number of Points 0 - 50 %[4] | Number of Points 50 - 100 %[5] | $R^2$ [6] | Exposure Concentrations (ug/mL)[7] | Dilution Factor[8] | Acceptable Tests[9] | Rationale for Unacceptability | Notes | PC ID |
|---|---|---|---|---|---|---|---|---|---|---|---|---|---|---|---|
| **CITRIC ACID** | | | | | | | | | | | | | | | |
| ***IIVS*** | | | | | | | | | | | | | | | |
| A1 | RF | AA61MH | 1030 | 5.376 | 0.363 | 7.76% | 1 | 2 | 0.8924 | 10000, 1000, 100, 10, 1, 0.1, 0.01, 0.001 | 10 | RF | range finder | | SLS-A1 |
| B1 | DF | AA61MH | 681 | 3.54 | 0.389 | 3.15% | 2 | 3 | 0.9722 | 10000, 5556, 3086, 1715, 953, 529, 294, 163 | 1.8 | YES | | | SLS-B1 |
| B2 | DF | AA61MH | 942 | 4.90 | 0.379 | 5.58% | 1 | 4 | 0.9742 | 10000, 5556, 3086, 1715, 953, 529, 294, 163 | 1.8 | YES | | | SLS-B2 |
| B3 | DF | AA61MH | 971 | 5.05 | 0.381 | 1.66% | 1 | 4 | 0.9858 | 10000, 5556, 3086, 1715, 953, 529, 294, 163 | 1.8 | YES | | | SLS-B3 |
| ***ECBC*** | | | | | | | | | | | | | | | |
| AA61HH-A1 | RF | AA61HH | 409 | 2.130 | 0.341 | 0.32% | 2 | 5 | 0.9275 | 10000, 1000, 100,10, 1, 0.1, 0.01, 0.001 | 10 | RF | range finder | ppt in 1X C1 | SLS-P1 |
| AA61HH-B1 | DF | AA61HH | 598 | 3.115 | 0.299 | 2.62% | 4 | 4 | 0.9879 | 10000, 4651, 2163, 1006, 468, 218, 101, 47.1 | 2.15 | YES | | ppt in 1X C1 | SLS-P5 |
| AA61HH-B2 | DF | AA61HH | 325 | 1.692 | 0.418 | 9.20% | 4 | 2 | 0.9800 | 4651, 2163, 1006, 468, 218, 101, 47.1, 21.9 | 2.15 | YES | | ppt in 1X C1 | SLS-P8 |
| AA61HH-B3 | DF | AA61HH | 497 | 2.585 | 0.423 | 1.95% | 3 | 5 | 0.9732 | 4651, 2163, 1006, 468, 218, 101, 47.1, 21.9 | 2.15 | YES | | | SLS-P17 |
| ***FRAME*** | | | | | | | | | | | | | | | |
| FAL.3T3.RB.A1.08/01/04 | RF | AA61RB | 1050 | 5.489 | 0.557 | 1.11% | 1 | 1 | 0.8824 | 10000, 1000, 100, 10, 1, 0.1, 0.01, 0.001 | 10 | RF | range finder | | FAL.3T3.SLS.080104 |
| FAL3T3.RB.A2.15-01-04 | DF | AA61RB | 668 | 3.479 | 0.730 | 5.04% | 4 | 4 | 0.9467 | 10000, 4651, 2163, 1006, 468, 218, 101, 47.1 | 2.15 | NO | PC failed; | | FAL.3T3.SLS.15/01/04 |
| FAL3T3.RB.B1.22-01-04 | DF | AA61RB | 1080 | 5.617 | 0.411 | 1.38% | 3 | 2 | 0.9403 | 5000, 2325.6, 1081.7, 503.1, 234.0, 108.8, 50.6, 23.5 | 2.15 | YES | | | FAL.3T3.SLS.22/01/04 |
| FAL3T3.RB.B2.29-01-04 | DF | AA61RB | 1050 | 5.476 | 0.423 | 12.11% | 4 | 4 | 0.9575 | 5000, 3401, 2314, 1574, 1071, 728, 496, 337 | 1.47 | YES | | pH 3 fpr C1; SD suggests high pH may be cause of toxicity for this concentration; | FAL3T3.SLS.29-01-04 |
| FAL3T3.RB.B3.05.02.04 | DF | AA61RB | 345 | 1.797 | 0.344 | 4.03% | 7 | 0 | 0.8104 | 5000, 3401, 2314, 1574, 1071, 728, 496, 337 | 1.47 | NO | PC failed; no points between 50-100 | problem with reservoir liners; SD incorrectly determined 4 points between 50-100 instead of 0 points | FAL.3T3.SLS.5/02/04 |
| FAL3T3.RB.25-02-04 | DF | AA61RB | 1100 | 5.721 | 0.481 | 11.65% | 4 | 4 | 0.9805 | 5000, 3401, 2314, 1574, 1071, 728, 496, 337 | 1.47 | YES | | definitive test B4 | FAL3T3.SLS.25.02.04 |
| FAL3T3.RB.B5.17.03.04 | DF | AA61RB | 1360 | 7.087 | 0.304 | 6.25% | 2 | 2 | 0.9139 | 5000, 2325.6, 1081.7, 503.1, 234.0, 108.8, 50.6, 23.5 | 2.15 | YES | | | FAL.3T3.SLS.17/03/04 |
| **COLCHICINE** | | | | | | | | | | | | | | | |
| ***IIVS*** | | | | | | | | | | | | | | | |
| A1 | RF | AA61FL | 0.027 | 0.0001 | 0.514 | 1.69% | 5 | 1 | 0.9699 | 10000, 1000, 100, 10, 1, 0.1, 0.01, 0.001 | 10 | RF | range finder | | SLS-A1 |
| B1 | DF | AA61FL | 0.028 | 0.0001 | 0.416 | 3.16% | 4 | 4 | 0.9768 | 0.1, 0.067, 0.044, 0.030, 0.020, 0.013, 0.0088, 0.0059 | 1.49 | YES | | | SLS-B1 |
| B2 | DF | AA61FL | 0.028 | 0.0001 | 0.527 | 2.34% | 4 | 4 | 0.9809 | 0.1, 0.067, 0.044, 0.030, 0.020, 0.013, 0.0088, 0.0059 | 1.49 | YES | | | SLS-B2 |
| B3 | DF | AA61FL | 0.037 | 0.0001 | 0.578 | 6.33% | 3 | 2 | 0.9522 | 0.1, 0.067, 0.044, 0.030, 0.020, 0.013, 0.0088, 0.0059 | 1.49 | NO | PC failed | | SLS-B3 |

# 3T3 NRU Reference Substance Data

| Experiment ID 3T3 Cells | Assay Type[1] | Substance ID | $IC_{50}$ (ug/mL) | $IC_{50}$ (mM) | Mean VC OD[2] | Difference of right/left VC from mean VC[3] | Number of Points 0 - 50 %[4] | Number of Points 50 - 100 %[5] | $R^2$ [6] | Exposure Concentrations (ug/mL)[7] | Dilution Factor[8] | Acceptable Tests[9] | Rationale for Unacceptability | Notes | PC ID |
|---|---|---|---|---|---|---|---|---|---|---|---|---|---|---|---|
| B4 | DF | AA61FL | 0.028 | 0.0001 | 0.406 | 0.86% | 4 | 2 | 0.9508 | 0.1, 0.067, 0.044, 0.030, 0.020, 0.013, 0.0088, 0.0059 | 1.49 | YES | | | SLS-B4 |
| ***ECBC*** | | | | | | | | | | | | | | | |
| AA61JZ-A1 | RF | AA61JZ | 0.008 | 0.0000 | 0.369 | 3.91% | 2 | 0 | 0.9383 | 10000, 1000, 100, 10, 1.0, 0.1, 0.01, 0.001 | 10 | RF | PC failed; no points between 50 - 90%; range finder | | SLS-P2 |
| AA61JZ-B2 | DF | AA61JZ | 0.023 | 0.0001 | 0.595 | 8.49% | 6 | 2 | 0.8811 | 0.200, 0.136, 0.093, 0.063,0.043, 0.029, 0.020, 0.013 | 1.47 | YES | | | SLS-P8 |
| AA61JZ-B3 | DF | AA61JZ | 0.018 | 0.0001 | 0.494 | 0.43% | 6 | 2 | 0.9020 | 0.136, 0.093, 0.063, 0.043, 0.029, 0.020, 0.013, 0.009 | 1.47 | YES | | | SLS-P9 |
| AA61JZ-B4 | DF | AA61JZ | 0.019 | 0.0001 | 0.549 | 0.68% | 4 | 2 | 0.9658 | 0.136, 0.093, 0.063, 0.043, 0.029, 0.020, 0.013, 0.009 | 1.47 | YES | | | SLS-P12 |
| AA61JZ-B5 | DF | AA61JZ | 0.022 | 0.0001 | 0.664 | 1.90% | 6 | 1 | 0.9584 | 0.136, 0.093, 0.063, 0.043, 0.029, 0.020, 0.013, 0.009 | 1.47 | YES | | | SLS-P13 |
| ***FRAME*** | | | | | | | | | | | | | | | |
| FAL.3T3.A1.NW.200603 | RF | AA61NW | 0.088 | 0.0003 | 0.699 | 5.16% | 6 | 0 | 0.4881 | 10000,1000, 100, 10, 1.0, 0.1, 0.01, 0.001 | 10 | RF | no points between 50 - 90%; low r2; range finder | | FAL.3T3.SLS2.A1.200603 |
| FAL.3T3.A2.NW.27.06.03 | RF | AA61NW | NA | NA | 0.519 | 0.16% | 8 | 0 | 0.2194 | 2.50, 1.16, 0.54, 0.25, 0.12, 0.05, 0.025, 0.012 | 2.15 | RF | no points between 50 - 90%; low r2 | | FAL.3T3.SLS.A2.27.06.03 |
| FAL.3T3.B1.NW.04.07.03 | DF | AA61NW | 0.184 | 0.0006 | 0.503 | 2.71% | 5 | 1 | 0.7952 | 2.50, 1.16, 0.54, 0.25, 0.12, 0.05, 0.025, 0.012 | 2.15 | NO | PC failed; low r2 | | FAL.3T3.SLS.04.07.03 |
| FAL.3T3.B2.NW.11.07.03 | DF | AA61NW | 0.046 | 0.0001 | 0.532 | 4.41% | 6 | 2 | 0.8093 | 2.50, 1.16, 0.54, 0.25, 0.12, 0.05, 0.025, 0.012 | 2.15 | YES | | | FAL.3T3.SLS.11.07.03 |
| FAL.3T3.B3.NW.18.07.03 (recalculated to fit bottom) | DF | AA61NW | 0.127 | 0.0004 | 0.481 | 5.60% | 5 | 2 | 0.8882 | 5.00, 2.33, 1.08, 0.50, 0.234, 0.109, 0.051, 0.024 | 2.15 | YES | | | FAL.3T3.SLS.18.07.03 |
| FAL.3T3.B5.NW.25.07.03 | DF | AA61NW | 0.106 | 0.0003 | 0.397 | 3.23% | 5 | 3 | 0.8590 | 2.50, 1.16, 0.54, 0.25, 0.12, 0.05, 0.025, 0.012 | 2.15 | YES | | | FAL.3T3.SLS.25.07.03 |

## CUPRIC SULFATE PENTAHYDRATE

| | | | | | | | | | | | | | | | |
|---|---|---|---|---|---|---|---|---|---|---|---|---|---|---|---|
| ***IIVS*** | | | | | | | | | | | | | | | |
| A1 | RF | AA61LA | 4.02 | 0.016 | 0.496 | 4.40% | 2 | 5 | 0.9647 | 100, 10, 1, 0.1, 0.01, 0.001, 0.0001, 0.00001 | 10 | RF | range finder | | SLS-A2 |
| B1 | DF | AA61LA | 4.26 | 0.017 | 0.395 | 23.78% | 3 | 1 | 0.6017 | 10.0, 7.14, 5.10, 3.64, 2.60, 1.86, 1.33, 0.949 | 1.4 | NO | % VC difference > 15 | excessive variability within treatment and cotrol groups | SLS-B4 |
| B2 | DF | AA61LA | 4.58 | 0.018 | 0.463 | 1.04% | 3 | 3 | 0.9765 | 10.0, 7.14, 5.10, 3.64, 2.60, 1.86, 1.33, 0.949 | 1.4 | YES | | | SLS-B6 |
| B3 | DF | AA61LA | 4.84 | 0.019 | 0.418 | 0.86% | 3 | 3 | 0.9887 | 10.0, 7.14, 5.10, 3.64, 2.60, 1.86, 1.33, 0.949 | 1.4 | YES | | plates read 15-16 hr late; orignial reading used wrong OD wavelength | SLS-B11 |
| B4 | DF | AA61LA | 7.73 | 0.031 | 0.375 | 2.20% | 1 | 2 | 0.8726 | 10.0, 7.14, 5.10, 3.64, 2.60, 1.86, 1.33, 0.949 | 1.4 | YES | | | SLS-B12 |
| ***ECBC*** | | | | | | | | | | | | | | | |
| AA61HX-A1 | RF | AA61HX | 50.7 | 0.203 | 0.461 | 2.51% | 2 | 1 | 0.9661 | 1000, 100, 10, 1, 0.1, 0.01, 0.001, 0.0001 | 10 | RF | range finder | ppt in 2X C1 | SLS-P8 |
| AA61HX-B1 | DF | AA61HX | 86.3 | 0.346 | 0.604 | 0.57% | 3 | 3 | 0.9913 | 1000, 465, 216, 101, 46.8, 21.8, 10.1, 4.71 | 2.15 | YES | | ppt in 2X C1 | SLS-P26 |
| AA61HX-B2 | DF | AA61HX | 81.7 | 0.327 | 0.668 | 3.02% | 3 | 3 | 0.9623 | 400, 272, 185, 126, 85.7, 58.3, 39.6, 27.0 | 1.47 | YES | | | SLS-P28 |
| AA61HX-B3 | DF | AA61HX | 80.2 | 0.321 | 0.447 | 5.54% | 5 | 3 | 0.9336 | 400, 272, 185, 126, 85.7, 58.3, 39.6, 27.0 | 1.47 | YES | | | SLS-P29 |
| ***FRAME*** | | | | | | | | | | | | | | | |

# 3T3 NRU Reference Substance Data

| Experiment ID 3T3 Cells | Assay Type[1] | Substance ID | $IC_{50}$ (ug/mL) | $IC_{50}$ (mM) | Mean VC OD[2] | Difference of right/left VC from mean VC[3] | Number of Points 0 - 50 %[4] | Number of Points 50 - 100 %[5] | $R^2$ [6] | Exposure Concentrations (ug/mL)[7] | Dilution Factor[8] | Acceptable Tests[9] | Rationale for Unacceptability | Notes | PC ID |
|---|---|---|---|---|---|---|---|---|---|---|---|---|---|---|---|
| FAL.3T3.LP.A1.21.05.04 | RF | AA61LP | 85.9 | 0.344 | 0.266 | 1.47% | 2 | 0 | 0.5809 | 1000, 100, 10, 1, 0.1, 0.01, 0.001, 0.0001 | 10 | RF | range finder; no points 50 - 100% | | FAL.3T3.SLS.21.05.04 |
| FAL.3T3.LP.B1.04.06.04 | DF | AA61LP | 99.1 | 0.397 | 0.415 | 9.90% | 6 | 1 | 0.9314 | 1000, 680, 463, 315, 214, 146, 99.1, 67.4 | 1.47 | YES | | | FAL.3T3.SLS.04.06.04 |
| FAL.3T3.LP.B2.17/06/04 | DF | AA61LP | 204 | 0.816 | 0.492 | 0.27% | 3 | 1 | 0.9641 | 500, 340, 231, 157, 107, 72.8, 49.6, 33.7 | 1.47 | YES | | | FAL.3T3.SLS.17.06.04 |
| FAL.3T3.LP.B3.09.07.04 | DF | AA61LP | 106 | 0.425 | 0.408 | 0.31% | 5 | 0 | 0.9552 | 500, 340, 231, 157, 107, 72.8, 49.6, 33.7 | 1.47 | NO | no points between 50 - 100% | | FAL.3T3.SLS.09.07.04 |
| FAL.3T3.LP.B4.14.10.04 | DF | AA61LP | 101 | 0.404 | 0.304 | 1.01% | 3 | 0 | 0.9749 | 500, 340, 231, 157, 107, 72.8, 49.6, 33.7 | 1.47 | NO | no points between 50 - 100% | | FAL.3T3.SLS.14.10.04 |
| FAL.3T3.LP.B5.15.10.04 | DF | AA61LP | 138 | 0.552 | 0.303 | 7.50% | 4 | 0 | 0.9352 | 1000, 680, 463, 315, 214, 146, 99.1, 67.4 | 1.47 | NO | no points between 50 - 100% | outlier removed bySD | FAL.3T3.SLS.15.10.04 |
| FAL.3T3.LP.B6.21.10.04 | DF | AA61LP | NA | NA | 0.284 | 10.97% | 7 | 0 | 0.0000 | 500, 413, 342, 282, 233, 193, 159, 132 | 1.21 | NO | no points between 50 - 100% | | FAL.3T3.SLS.21.10.04 |
| FAL.3T3.LP.B7.28.10.04 | DF | AA61LP | 91.8 | 0.368 | 0.211 | 3.94% | 4 | 1 | 0.9658 | 250, 207, 171, 141, 117, 96.4, 79.7, 65.8 | 1.21 | YES | | | FAL.3T3.SLS.28.10.04 |
| FAL.3T3.LP.B8.04.11.04 | DF | AA61LP | 97.9 | 0.392 | 0.329 | 2.47% | 5 | 2 | 0.9464 | 250, 207, 171, 141, 117, 96.4, 79.7, 65.8 | 1.21 | YES | | outlier removed bySD | FAL.3T3.SLS.04.11.04 |

## CYCLOHEXIMIDE

| | | | | | | | | | | | | | | | |
|---|---|---|---|---|---|---|---|---|---|---|---|---|---|---|---|
| ***IIVS*** | | | | | | | | | | | | | | | |
| A1 | RF | AA61GL | 0.0873 | 0.0003 | 0.403 | 1.70% | 5 | 1 | 0.9733 | 1000, 100, 10, 1, 0.1, 0.01, 0.001, 0.0001 | 10 | RF | range finder | | SLS-A4 |
| B1 | DF | AA61GL | 0.101 | 0.0004 | 0.500 | 4.13% | 6 | 2 | 0.9567 | 2.00, 1.11, 0.617, 0.343, 0.191, 0.106, 0.059, 0.033 | 1.8 | YES | | | SLS-B4 |
| B2 | DF | AA61GL | 0.136 | 0.0005 | 0.363 | 2.02% | 5 | 3 | 0.9053 | 2.00, 1.11, 0.617, 0.343, 0.191, 0.106, 0.059, 0.033 | 1.8 | YES | | outlier removed bySD | SLS-B7 |
| B3 | DF | AA61GL | 0.0887 | 0.0003 | 0.444 | 0.43% | 6 | 2 | 0.9577 | 2.00, 1.11, 0.617, 0.343, 0.191, 0.106, 0.059, 0.033 | 1.8 | YES | | | SLS-B8 |
| ***ECBC*** | | | | | | | | | | | | | | | |
| AA61KK-A1 | RF | AA61KK | 0.102 | 0.0004 | 0.377 | 10.52% | 5 | 0 | 0.9586 | 10000,1000, 100, 10, 1,0.1, 0.01, 0.001 | 10 | RF | range finder | | SLS-P13 |
| AA61KK-B1 | DF | AA61KK | 0.11 | 0.0004 | 0.659 | 9.97% | 5 | 3 | 0.9666 | 3.00, 1.40, 0.649, 0.302,0.140, 0.065, 0.030, 0.014 | 2.15 | YES | | | SLS-P37 |
| AA61KK-B2 | DF | AA61KK | 0.0767 | 0.0003 | 0.412 | 3.79% | 5 | 3 | 0.9698 | 3.00, 1.40, 0.649, 0.302,0.140, 0.065, 0.030, 0.014 | 2.15 | YES | | | SLS-P40 |
| AA61KK-B3 | DF | AA61KK | 0.187 | 0.0007 | 0.553 | 9.02% | 4 | 4 | 0.9535 | 3.00, 1.40, 0.649, 0.302,0.140, 0.065, 0.030, 0.014 | 2.15 | YES | | | SLS-P41 |
| ***FRAME*** | | | | | | | | | | | | | | | |
| FAL.3T3.PF.A1.10.09.04 | RF | AA61PF | 1.89 | 0.0067 | 0.435 | 1.28% | 4 | 2 | 0.9465 | 10000, 1000, 100, 10, 1, 0.1, 0.01, 0.001 | 10 | RF | range finder | | FAL.3T3.SLS.10.09.04 |
| FAL.3T3.PF.B1.16.09.04 | DF | AA61PF | 0.0796 | 0.0003 | 0.334 | 6.16% | 8 | 0 | 0.9819 | 465, 148, 46.9, 14.9, 4.7, 1.5, 0.476, 0.151 | 3.15 | NO | no points between 50 - 100% | | FAL.3T3.SLS.16.09.04 |
| FAL.3T3.PF.B2.15.10.04 | DF | AA61PF | 1.12 | 0.0040 | 0.333 | 0.40% | 4 | 2 | 0.8800 | 50.0, 15.9, 5.04, 1.60, 0.508, 0.161, 0.0512, 0.0162 | 3.15 | YES | | | FAL.3T3.SLS.15.10.04 |
| FAL.3T3.PF.28.10.04 | DF | AA61PF | 0.00946 | 0.0000 | 0.272 | 2.42% | 8 | 0 | 0.9126 | 50.0, 15.9, 5.04, 1.60, 0.508, 0.161, 0.0512, 0.0162 | 3.15 | NO | no points between 0 - 50% | outlier removed bySD | FAL.3T3.SLS.28.10.04 |
| FAL.3T3.PF.B4.04.11.04 | DF | AA61PF | 0.221 | 0.0008 | 0.282 | 7.83% | 5 | 2 | 0.9566 | 50.0, 15.9, 5.04, 1.60, 0.508, 0.161, 0.0512, 0.0162 | 3.15 | YES | | | FAL.3T3.SLS.04.11.04 |

# 3T3 NRU Reference Substance Data

| Experiment ID 3T3 Cells | Assay Type[1] | Substance ID | $IC_{50}$ (ug/mL) | $IC_{50}$ (mM) | Mean VC OD[2] | Difference of right/left VC from mean VC[3] | Number of Points 0 - 50 %[4] | Number of Points 50 - 100 %[5] | $R^2$ [6] | Exposure Concentrations (ug/mL)[7] | Dilution Factor[8] | Acceptable Tests[9] | Rationale for Unacceptability | Notes | PC ID |
|---|---|---|---|---|---|---|---|---|---|---|---|---|---|---|---|
| FAL.3T3.PF.B5.11.11.04 | DF | AA61PF | 0.601 | 0.0021 | 0.266 | 5.33% | 4 | 2 | 0.9235 | 50.0, 15.9, 5.04, 1.60, 0.508, 0.161, 0.0512, 0.0162 | 3.15 | YES | | outlier removed bySD | FAL.3T3.SLS.10.11.04 |

## DIBUTYL PHTHALATE

| | | | | | | | | | | | | | | | |
|---|---|---|---|---|---|---|---|---|---|---|---|---|---|---|---|
| ***IIVS*** | | | | | | | | | | | | | | | |
| A1 | RF | AA61FD | 13.5 | 0.048 | 0.371 | 2.38% | 2 | 1 | 0.9701 | 1000, 100, 10, 1, 0.1, 0.01, 0.001, 0.0001 | 10 | RF | range finder | ppt in 2X C1-C2 and 1X C1-C2 | SLS-A3 |
| B1 | DF | AA61FD | 19.5 | 0.070 | 0.474 | 7.57% | 4 | 2 | 0.9692 | 100, 62.5, 39.1, 24.4, 15.3, 9.54, 5.96, 3.73 | 1.6 | YES | | ppt in 2X C1 and 1X C1 | SLS-B5 |
| B2 | DF | AA61FD | 20.4 | 0.073 | 0.393 | 4.01% | 4 | 4 | 0.9786 | 100, 62.5, 39.1, 24.4, 15.3, 9.54, 5.96, 3.73 | 1.6 | YES | | ppt in 2X C1-C4; ppt in 1X C1 | SLS-B9 |
| B3 | DF | AA61FD | 22.2 | 0.080 | 0.338 | 1.43% | 4 | 4 | 0.9749 | 100, 62.5, 39.1, 24.4, 15.3, 9.54, 5.96, 3.73 | 1.6 | YES | | ppt in 1X C1-C2 | SLS-B10 |
| ***ECBC*** | | | | | | | | | | | | | | | |
| AA61JX-A1 | RF | AA61JX | 127 | 0.458 | 0.245 | 7.41% | 0 | 2 | 0.9266 | 1000, 100, 10, 1, 0.1, 0.01, 0.001, 0.0001 | 10 | RF | range finder | ppt in 2X C1 and 1X C1; higher than usual blank OD | SLS-P10 |
| AA61JX-B1 | DF | AA61JX | NA | NA | 0.643 | 4.39% | NA | NA | NA | 300, 204, 139, 94.4, 64.2, 43.7, 29.7, 20.2 | 1.47 | NO | odd toxicity curve; couldn't accurately calculate ICx values | toxicity curve goes up at the higher concentrations | SLS-P44 |
| AA61JX-B2 | DF | AA61JX | NA | NA | 0.551 | 4.45% | N/A | N/A | NA | 300, 204, 139, 94.4, 64.2, 43.7, 29.7, 20.2 | 1.47 | NO | odd toxicity curve; couldn't accurately calculate ICx values | toxicity curve goes up at the higher concentrations | SLS-P46 |
| AA61JX-B3 | DF | AA61JX | NA | NA | 0.627 | 6.38% | 0 | 8 | NA | 60.0, 40.8, 27.8, 18.9, 12.8, 8.74, 5.95, 4.05 | 1.47 | NO | PC failed; no points between 0 - 50% | | SLS-P60 |
| AA61JX-B4 | DF | AA61JX | 19.8 | 0.071 | 0.491 | 8.85% | 5 | 3 | 0.8450 | 100, 68.0, 46.3, 31.5, 21.4, 14.6, 9.9, 6.7 | 1.47 | YES | | | SLS-P63 |
| AA61JX-B5 | DF | AA61JX | 27.7 | 0.099 | 0.442 | 3.39% | 3 | 5 | 0.7470 | 100, 68.0, 46.3, 31.5, 21.4, 14.6, 9.9, 6.7 | 1.47 | YES | | 1X C1-C4 have small globules; highest conc. (C7, C8) less toxicity than C3-C6 | SLS-P67 |
| AA61JX-B6 | DF | AA61JX | 22.9 | 0.082 | 0.342 | 4.56% | 4 | 3 | 0.9178 | 100, 68.0, 46.3, 31.5, 21.4, 14.6, 9.9, 6.7 | 1.47 | YES | | 1X C1-C4 have small globules; highest conc. (C7, C8) less toxicity than C3-C4 | SLS-P69 |
| ***FRAME*** | | | | | | | | | | | | | | | |
| FAL.3T3.MK.A1.21.05.04 | RF | AA61MK | 104 | 0.372 | 0.225 | 1.44% | 1 | 1 | 0.7617 | 1000, 100, 10, 1, 0.1, 0.01, 0.001, 0.0001 | 10 | RF | range finder | ppt in 1X C1-C2 | FAL.3T3.SLS.21.05.04 |
| FAL.3T3.MK.B1.04.06.04 | DF | AA61MK | 306 | 1.100 | 0.429 | 4.08% | 3 | 5 | 0.8027 | 1000, 680, 463, 315, 214, 146, 99.1, 67.4 | 1.47 | YES | | ppt in 1X C1-C8 and 2X C1-C2 | FAL.3T3.SLS.04.06.04 |
| FAL.3T3.MK.B2.17.06.04 | DF | AA61MK | 74.6 | 0.268 | 0.410 | 0.20% | 5 | 3 | 0.9555 | 2500, 1163, 541, 252, 117, 54.4, 25.3, 11.8 | 2.15 | YES | | ppt in 1X C1-C4 and 2X C1-C2 | FAL.3T3.SLS.17.06.04 |
| FAL.3T3.MK.B3.09.07.04 | DF | AA61MK | 190 | 0.683 | 0.304 | 0.47% | 4 | 4 | 0.9592 | 2000, 930, 433, 201, 93.6, 43.5, 20.3, 9.42 | 2.15 | YES | | ppt in 1X C1-C8 and 2X C1-C2 | FAL.3T3.SLS.09.07.04 |
| FAL.3T3.MK.B4.25.11.04 | DF | AA61MK | 192 | 0.689 | 0.319 | 2.64% | 3 | 5 | 0.9167 | 2000, 930, 433, 201, 93.6, 43.5, 20.3, 9.42 | 2.15 | YES | | ppt in 2X C1; ppt in 1X C1-C3; | FAL.3T3.SLS.25.11.04 |

## DICHLORVOS

| | | | | | | | | | | | | | | | |
|---|---|---|---|---|---|---|---|---|---|---|---|---|---|---|---|
| ***IIVS*** | | | | | | | | | | | | | | | |
| A1 | RF | AA61NP | 8.66 | 0.039 | 0.341 | 83.42% | 1 | 1 | 0.9677 | 1000, 100, 10, 1, 0.1, 0.01, 0.001, 0.0001 | 10 | RF | range finder | VC1 Ods < VC2 ODs; VC1 removed from subsequent analysis; volatility issues. | SLS-A3 |
| B1 | DF | AA61NP | 16.9 | 0.076 | 0.347 | 8.46% | 3 | 5 | 0.9602 | 70.0, 38.9, 21.6, 12.0, 6.67, 3.70, 2.06, 1.14 | 1.8 | YES | | | SLS-B1 |
| B2 | DF | AA61NP | 17.3 | 0.078 | 0.321 | 0.23% | 3 | 3 | 0.9593 | 70.0, 38.9, 21.6, 12.0, 6.67, 3.70, 2.06, 1.14 | 1.8 | YES | | | SLS-B2 |

# 3T3 NRU Reference Substance Data

| Experiment ID 3T3 Cells | Assay Type[1] | Substance ID | $IC_{50}$ (ug/mL) | $IC_{50}$ (mM) | Mean VC OD[2] | Difference of right/left VC from mean VC[3] | Number of Points 0 - 50 %[4] | Number of Points 50 - 100 %[5] | $R^2$ [6] | Exposure Concentrations (ug/mL)[7] | Dilution Factor[8] | Acceptable Tests[9] | Rationale for Unacceptability | Notes | PC ID |
|---|---|---|---|---|---|---|---|---|---|---|---|---|---|---|---|
| B3 | DF | AA61NP | 20.7 | 0.093 | 0.366 | 4.92% | 3 | 2 | 0.9733 | 70.0, 38.9, 21.6, 12.0, 6.67, 3.70, 2.06, 1.14 | 1.8 | YES | | | SLS-B3 |
| ***ECBC*** | | | | | | | | | | | | | | | |
| AA61PZ-A1 | RF | AA61PZ | NA | NA | 0.121 | 98.38% | 3 | 0 | NA | 1000, 100, 10, 1, 0.1, 0.01, 0.001, 0.0001 | 10 | RF | range finder | probable volatility problem; VC1 <<< VC2; higher than usual blank OD | SLS-P10 |
| AA61PZ-A2 (sealer) | RF | AA61PZ | 13.7 | 0.062 | 0.473 | 4.53% | 0 | 5 | 0.9461 | 1000, 100, 10, 1, 0.1, 0.01, 0.001, 0.0001 | 10 | RF | range finder | | SLS-P43 |
| AA61PZ-B1 (sealer) | DF | AA61PZ | NA | NA | 0.242 | 11.12% | 3 | 4 | NA | 100, 46.5, 21.6, 10.1, 4.68, 2.18, 1.01, 0.47 | 2.15 | NO | PC failed | | SLS-P50 |
| AA61PZ-B2 (sealer) | DF | AA61PZ | NA | NA | 0.256 | 6.09% | 4 | 4 | NA | 100, 46.5, 21.6, 10.1, 4.68, 2.18, 1.01, 0.47 | 2.15 | NO | PC failed | | SLS-P52 |
| AA61PZ-B3 (sealer) | DF | AA61PZ | 12.1 | 0.055 | 0.503 | 12.85% | 2 | 5 | 0.9711 | 100, 46.5, 21.6, 10.1, 4.68, 2.18, 1.01, 0.47 | 2.15 | YES | | | SLS-P54 |
| AA61PZ-B4 (sealer) | DF | AA61PZ | NA | NA | 0.322 | 25.27% | 2 | 5 | NA | 100, 46.5, 21.6, 10.1, 4.68, 2.18, 1.01, 0.47 | 2.15 | NO | PC failed; % VC difference > 15 | | SLS-P56 |
| AA61PZ-B5 (sealer) | DF | AA61PZ | 5.90 | 0.027 | 0.298 | 7.56% | 3 | 4 | 0.9166 | 100, 46.5, 21.6, 10.1, 4.68, 2.18, 1.01, 0.47 | 2.15 | YES | | | SLS-P58 |
| AA61PZ-B6 (sealer) | DF | AA61PZ | 11.1 | 0.050 | 0.421 | 3.01% | 3 | 4 | 0.9466 | 100, 46.5, 21.6, 10.1, 4.68, 2.18, 1.01, 0.47 | 2.15 | NO | PC failed | | SLS-P60 |
| AA61PZ-B7 (sealer) | DF | AA61PZ | 11.5 | 0.052 | 0.347 | 2.26% | 2 | 5 | 0.9275 | 100, 46.5, 21.6, 10.1, 4.68, 2.18, 1.01, 0.47 | 2.15 | YES | | C1 conc. seems to interact with NR; toxicity curve going in opposite direction at this point | SLS-P62 |
| ***FRAME*** | | | | | | | | | | | | | | | |
| FAL.3T3.HS.A1.21.05.04 | RF | AA61HS | 57.8 | 0.262 | 0.119 | 90.83% | 2 | 0 | 0.1864 | 1000, 100, 10, 1, 0.1, 0.01, 0.001, 0.0001 | 10 | RF | range finder; % VC difference > 15; no points between 50 - 100% | volatility problem | FAL.3T3.SLS.21.05.04 |
| FAL.3T3.HS.B1.04.06.04 | DF | AA61HS | 35.0 | 0.158 | 0.371 | 5.60% | 3 | 3 | 0.9832 | 100, 68.0, 46.3, 31.5, 21.4, 14.6, 9.91, 6.74 | 1.47 | YES | | | FAL.3T3.SLS.04.06.04 |
| FAL.3T3.HS.B2.18.06.04 | DF | AA61HS | 30.9 | 0.140 | 0.685 | 1.85% | 3 | 4 | 0.9772 | 100, 68.0, 46.3, 31.5, 21.4, 14.6, 9.91, 6.74 | 1.47 | YES | | | FAL.3T3.SLS.18.06.04 |
| FAL.3T3.HS.B3.08.07.04 | DF | AA61HS | 32.5 | 0.147 | 0.209 | 11.98% | 2 | 2 | 0.9328 | 100, 68.0, 46.3, 31.5, 21.4, 14.6, 9.91, 6.74 | 1.47 | YES | | | FAL.3T3.SLS.08.07.04 |

## DIETHYL PHTHALATE

| | | | | | | | | | | | | | | | |
|---|---|---|---|---|---|---|---|---|---|---|---|---|---|---|---|
| ***IIVS*** | | | | | | | | | | | | | | | |
| A1 | RF | AA61NX | 276 | 1.242 | 0.232 | 5.28% | 1 | 1 | 0.1408 | 1000, 100, 10, 1, 0.1, 0.01, 0.001, 0.0001 | 10 | RF | range finder | the solvent controls treated with 1% DMSO instead of 0.5% | SLS-A4 |
| B1 | DF | AA61NX | 135 | 0.607 | 0.369 | 9.08% | 3 | 2 | 0.9536 | 1000, 556, 309, 171, 95.3, 52.9, 29.4, 16.3 | 1.8 | YES | | ppt in 2X C1-C2 | SLS-B5 |
| B2 | DF | AA61NX | 97.1 | 0.437 | 0.338 | 6.11% | 4 | 3 | 0.9853 | 1000, 556, 309, 171, 95.3, 52.9, 29.4, 16.3 | 1.8 | YES | | ppt in 2X C1-C2 | SLS-B9 |
| B3 | DF | AA61NX | 87.1 | 0.392 | 0.342 | 4.96% | 5 | 3 | 0.9870 | 1000, 556, 309, 171, 95.3, 52.9, 29.4, 16.3 | 1.8 | YES | | ppt in 2X C1-C3 | SLS-B10 |
| ***ECBC*** | | | | | | | | | | | | | | | |
| AA61GA-A1 | RF | AA61GA | 115 | 1.086 | 0.230 | 6.44% | 1 | 1 | 0.9260 | 1000, 100, 10, 1, 0.1, 0.01, 0.001, 0.0001 | 10 | RF | range finder | | SLS-P12 |
| AA61GA-B1 | DF | AA61GA | 119 | 0.536 | 0.323 | 6.29% | 4 | 4 | 0.9776 | 2000, 930, 433, 201, 93.6, 43.5, 20.2, 9.4 | 2.15 | YES | | | SLS-P32 |
| AA61GA-B2 | DF | AA61GA | 68.1 | 0.306 | 0.324 | 4.70% | 5 | 3 | 0.9414 | 2000, 930, 433, 201, 93.6, 43.5, 20.2, 9.4 | 2.15 | YES | | | SLS-P34 |
| AA61GA-B3 | DF | AA61GA | 69.5 | 0.313 | 0.552 | 0.35% | 5 | 3 | 0.9527 | 2000, 930, 433, 201, 93.6, 43.5, 20.2, 9.4 | 2.15 | YES | | | SLS-P36 |
| ***FRAME*** | | | | | | | | | | | | | | | |
| FAL.3T3.KZ.A1.10.09.04 | RF | AA61KZ | 148 | 0.666 | 0.259 | 12.82% | 1 | 2 | 0.7507 | 1000, 100, 10, 1, 0.1, 0.01, 0.001, 0.0001 | 10 | RF | range finder | ppt in 2X C1 | FAL.3T3.SLS.10.09.04 |
| FAL.3T3.KZ.B1.16.09.04 | DF | AA61KZ | 176 | 0.791 | 0.239 | 15.05% | 3 | 3 | 0.9712 | 1000, 465, 216, 101, 46.8, 21.8, 10.1, 4.7 | 2.15 | YES | | outlier removed bySD; ppt in 2X C1-C2 | FAL.3T3.SLS.16.09.04 |

# 3T3 NRU Reference Substance Data

| Experiment ID 3T3 Cells | Assay Type[1] | Substance ID | $IC_{50}$ (ug/mL) | $IC_{50}$ (mM) | Mean VC OD[2] | Difference of right/left VC from mean VC[3] | Number of Points 0 - 50 %[4] | Number of Points 50 - 100 %[5] | $R^2$ [6] | Exposure Concentrations (ug/mL)[7] | Dilution Factor[8] | Acceptable Tests[9] | Rationale for Unacceptability | Notes | PC ID |
|---|---|---|---|---|---|---|---|---|---|---|---|---|---|---|---|
| FAL.3T3.KZ.B2.15.10.04 | DF | AA61KZ | 160 | 0.720 | 0.244 | 1.62% | 3 | 5 | 0.9759 | 1000, 465, 216, 101, 46.8, 21.8, 10.1, 4.7 | 2.15 | YES | | outlier removed by SD | FAL.3T3.SLS.15.10.04 |
| FAL.3T3.KZ.B3.28.10.04 | DF | AA61KZ | 104 | 0.469 | 0.185 | 4.87% | 3 | 3 | 0.9759 | 1000, 465, 216, 101, 46.8, 21.8, 10.1, 4.7 | 2.15 | YES | | ppt in 2X C1-C2 | FAL.3T3.SLS.28.10.04 |
| **DIGOXIN** | | | | | | | | | | | | | | | |
| ***IIVS*** | | | | | | | | | | | | | | | |
| A1 | RF | AA61MF | 310 | 0.398 | 0.350 | 0.21% | 1 | 1 | 0.9022 | 1000, 100, 10, 1, 0.1, 0.01, 0.001, 0.0001 | 10 | RF | range finder | *ppt in 2X C1 and in 1X C1* | SLS-A3 |
| B1 | DF | AA61MF | 269 | 0.344 | 0.427 | 6.41% | 1 | 3 | 0.8853 | 1000, 588, 346, 204, 120, 70.4, 41.4, 24.4 | 1.7 | YES | | ppt in 1X C1-C3 & 2X C1; SD removed C1 & C2 from PRISM to get Hill analysis; ppt in 1X C1 and C2 caused upswing in the toxicity curve | SLS-B5 |
| B2 | DF | AA61MF | NA | NA | 0.308 | 9.13% | 0 | 3 | NA | 400, 267, 178, 119, 79.0, 52.7, 35.1, 23.4 | 1.5 | NO | no points between 0 - 50% | ppt in 1X C1 | SLS-B13 |
| B3 | DF | AA61MF | NA | NA | NA | NA | NA | NA | NA | NA | NA | NO | PC failed | | SLS-B14 |
| B4 | DF | AA61MF | 365 | 0.467 | 0.296 | 2.70% | 0 | 4 | 0.5436 | 1000, 556, 309, 171, 95, 53, 29.4, 16.3 | 1.8 | YES | | ppt in 2X C1 and 1X C1-C2; SD removed C1 & C2 from PRISM analyses; no points left between 0-50% viability; SD accepts test | SLS-B15 |
| B5 | DF | AA61MF | 1500 | 1.925 | 0.335 | 4.20% | 0 | 4 | 0.3342 | 1000, 556, 309, 171, 95, 53, 29.4, 16.3 | 1.8 | NO | no points between 0 - 50% | ppt in 2X C1; ppt in 1X C1-C2; SD ends testing of chemical; solubility limits have been reached | SLS-B16 |
| ***ECBC*** | | | | | | | | | | | | | | | |
| AA61PP-A1 | RF | AA61PP | 123 | 0.157 | 0.238 | 3.43% | 1 | 4 | 0.8888 | 1000, 100, 10, 1, 0.1, 0.01, 0.001, 0.0001 | 10 | RF | range finder | ppt in 1X C1 and 2X C1; higher than usual blank OD | SLS-P10 |
| AA61PP-B1 | DF | AA61PP | NA | NA | 0.344 | 6.81% | 0 | 6 | NA | 400, 272, 185, 126, 85.7, 58.3, 39.6, 27.0 | 1.47 | NO | no points between 0 - 50% | crystals in !x C1-C2; not like NR crystals | SLS-P40 |
| AA61PP-B2 | DF | AA61PP | 475 | 0.609 | 0.463 | 6.42% | 2 | 3 | 0.8877 | 400, 272, 185, 126, 85.7, 58.3, 39.6, 27.0 | 1.47 | YES | | crystals in 1X C1-C2; not like NR crystals; C1 toxicity less than C2 | SLS-P42 |
| AA61PP-B3 | DF | AA61PP | 204 | 0.261 | 0.452 | 4.45% | 5 | 3 | 0.6366 | 1000, 680, 463, 315, 214, 146, 99, 67 | 1.47 | YES | | ppt in 2X C1; ppt in 1X C1-C5 (large chemical crystals in wells); | SLS-P72 |
| AA61PP-B4 | DF | AA61PP | 373 | 0.478 | 0.452 | 10.52% | 2 | 6 | 0.6692 | 1000, 680, 463, 315, 214, 146, 99, 67 | 1.47 | YES | | ppt in 2X C1-C2; ppt in 1X C1-C4 | SLS-P74 |
| ***FRAME*** | | | | | | | | | | | | | | | |
| FAL.3T3.HN.A1.27/05/04 | RF | AA61HN | 918 | 1.176 | 0.381 | 7.78% | 1 | 0 | 0.6117 | 1000, 100, 10, 1, 0.1, 0.01, 0.001, 0.0001 | 10 | RF | range finder; no points 50 - 100% | ppt in 1X C1-C3 | FAL.3T3.SLS.27/05/04 |
| FAL.3T3.HN.B1.04/06/04 FAULT | DF | AA61HN | 873 | 1.118 | 0.419 | 6.70% | 1 | 2 | 0.8308 | 750, 347, 162, 75.0, 35.0, 16.3, 7.6, 3.5 | 2.15 | YES | | ppt in 1X C1-C3; dilution factor not provided | FAL.3T3.SLS.04.06.04 |
| FAL.3T3.HN.B2.18/06/04 | RF | AA61HN | 387 | 0.496 | 0.451 | 4.84% | NA | NA | 0.5399 | 1000, 465, 216, 101, 46.8, 21.8, 10.1, 4.7 | 2.15 | NO | can't determine which points are true toxicity points | ppt in 2X C1 and ppt in 1X C1-C3 | FAL.3T3.SLS.18.06.04 |
| FAL.3T3.HN.B3.09/07/04 | DF | AA61HN | 75900 | 97.141 | 0.317 | 1.92% | 0 | 6 | 0.8417 | 1500, 698, 325, 151, 70.2, 32.7, 15.2, 7.1 | 2.15 | NO | no points between 0 - 50% | ppt in 2X C1 and ppt in 1X C1-C5 | FAL.3T3.SLS.09.07.04 |
| FAL.3T3.HN.B4.16/07/04 | DF | AA61HN | NA | NA | 0.262 | 0.86% | 0 | 4 | 0.3528 | 2000, 930, 433, 201, 93.6, 43.5, 20.3, 9.42 | 2.15 | NO | no points between 0 - 50% | ppt in 2X C1-C2 and ppt in 1X C1-C4 | FAL.3T3.SLS.16.07.04 |
| FAL.3T3.HN.B5.17.09.04 | DF | AA61HN | NA | NA | 0.304 | 0.27% | 0 | 4 | NA | 500, 340, 231, 157, 107, 72.8, 49.6, 33.7 | 1.47 | NO | no points between 0 - 50% | problem with stimulation of NRU; toxicity increases then as conc. rises NRU also rises & IC50 not reached | FAL.3T3.SLS.17.09.04 |
| FAL.3T3.HN.B6.23.09.04 | DF | AA61HN | 582 | 0.745 | 0.310 | 3.38% | 2 | 2 | 0.6844 | 1000, 680, 463, 315, 214, 146, 99.1, 67.4 | 1.47 | YES | | outlier removed by SD; ppt in 2X C1-C2; ppt in 1X C1-C4 | FAL.3T3.SLS.23.09.04 |

# 3T3 NRU Reference Substance Data

| Experiment ID 3T3 Cells | Assay Type[1] | Substance ID | $IC_{50}$ (ug/mL) | $IC_{50}$ (mM) | Mean VC $OD^2$ | Difference of right/left VC from mean VC[3] | Number of Points 0 - 50 %[4] | Number of Points 50 - 100 %[5] | $R^2$ [6] | Exposure Concentrations (ug/mL)[7] | Dilution Factor[8] | Acceptable Tests[9] | Rationale for Unacceptability | Notes | PC ID |
|---|---|---|---|---|---|---|---|---|---|---|---|---|---|---|---|
| FAL.3T3.HN.B7.14.10.04 | DF | AA61HN | 1220 | 1.568 | 0.322 | 4.77% | 1 | 7 | 0.4589 | 1000, 680, 463, 315, 214, 146, 99.1, 67.4 | 1.47 | YES | | outlier removed bySD; ppt in 2X C1-C3; ppt in 1X C1-C6 | FAL.3T3.SLS.14.10.04 |
| **DIMETHYLFORMAMIDE** | | | | | | | | | | | | | | | |
| ***IIVS*** | | | | | | | | | | | | | | | |
| A1 | RF | AA61FN | 6870 | 93.990 | 0.392 | 1.04% | 1 | 5 | 0.7331 | 10000, 1000, 100, 10, 1, 0.1, 0.01, 0.001 | 10 | RF | range finder | | SLS-A5 |
| B1 | DF | AA61FN | 5060 | 69.196 | 0.485 | 3.39% | 4 | 4 | 0.9915 | 20000, 13333, 8889, 5926, 3951, 2634, 1756, 1171 | 1.5 | YES | | | SLS-B4 |
| B2 | DF | AA61FN | 4940 | 67.621 | 0.375 | 8.71% | 4 | 4 | 0.9900 | 20000, 13333, 8889, 5926, 3951, 2634, 1756, 1171 | 1.5 | YES | | | SLS-B7 |
| B3 | DF | AA61FN | 4700 | 64.281 | 0.413 | 5.07% | 4 | 4 | 0.9892 | 20000, 13333, 8889, 5926, 3951, 2634, 1756, 1171 | 1.5 | YES | | | SLS-B8 |
| ***ECBC*** | | | | | | | | | | | | | | | |
| AA61MW-A1 | RF | AA61MW | 6410 | 87.717 | 0.522 | 4.15% | 1 | 2 | 0.9137 | 10000, 1000, 100, 10, 1, 0.1, 0.01, 0.001 | 10 | RF | range finder | | SLS-15 |
| AA61MW-B1 | DF | AA61MW | 4750 | 65.025 | 0.522 | 3.30% | 4 | 4 | 0.9866 | 20000, 13605, 9255, 6296, 4283, 2914, 1982, 1348 | 1.47 | YES | | | SLS-P42 |
| AA61MW-B2 | DF | AA61MW | 5680 | 77.639 | 0.697 | 1.26% | 3 | 5 | 0.9610 | 20000, 13605, 9255, 6296, 4283, 2914, 1982, 1348 | 1.47 | YES | | | SLS-P43 |
| AA61MW-B3 | DF | AA61MW | 5600 | 76.574 | 0.616 | 0.92% | 4 | 4 | 0.9830 | 20000, 13605, 9255, 6296, 4283, 2914, 1982, 1348 | 1.47 | YES | | | SLS-P45 |
| ***FRAME*** | | | | | | | | | | | | | | | |
| FAL.3T3.KF.A1.21.10.04 | RF | AA61KF | 8990 | 123.050 | 0.315 | 7.39% | 1 | 0 | 0.3085 | 10000, 1000, 100, 10, 1.0, 0.1, 0.01, 0.001 | 10 | RF | range finder; no points between 50-100% | | FAL.3T3.SLS.21.10.04 |
| FAL.3T3.KF.B1.11.11.04 | DF | AA61KF | 5180 | 70.808 | 0.276 | 14.58% | 4 | 2 | 0.9649 | 50000, 23256, 10817, 5031, 2340, 1088, 506, 236 | 2.15 | YES | | | FAL.3T3.SLS.10.11.04 |
| FAL.3T3.KF.B2.18.11.04 | DF | AA61KF | 673 | 9.206 | 0.305 | 26.13% | 3 | 2 | 0.9507 | 5000, 2326, 1082, 503, 234, 109, 50.6, 23.5 | 2.15 | NO | % VC difference >15 | ppt in 2X C1; concentraton range may be off by factor of 10; C1 probably 50000 | FAL.3T3.SLS.19.11.04 |
| FAL.3T3.KF.B3.25.11.04 | DF | AA61KF | 6080 | 83.192 | 0.382 | 0.74% | 2 | 3 | 0.9630 | 50000, 23256, 10817, 5031, 2340, 1088, 506, 236 | 2.15 | YES | | ppt in 2X C1 | FAL.3T3.SLS.25.11.04 |
| FAL.3T3.KF.B4.26.11.04 | DF | AA61KF | 5190 | 70.971 | 0.381 | 9.84% | 2 | 3 | 0.8958 | 50000, 23256, 10817, 5031, 2340, 1088, 506, 236 | 2.15 | YES | | ppt in 2X C1 | FAL.3T3.SLS.26.11.04 |
| **DIQUAT DIBROMIDE MONOHYDRATE** | | | | | | | | | | | | | | | |
| ***IIVS*** | | | | | | | | | | | | | | | |
| A1 | RF | AA61GN | 4.65 | 0.013 | 0.448 | 3.20% | 2 | 4 | 0.9862 | 10000, 1000, 100, 10, 1, 0.1, 0.01, 0.001 | 10 | RF | range finder | | SLS-A3 |
| B1 | DF | AA61GN | 3.83 | 0.011 | 0.485 | 2.39% | 3 | 4 | 0.9675 | 10.0, 7.14, 5.10, 3.64, 2.60, 1.86, 1.33, 0.949 | 1.4 | YES | | | SLS-B4 |
| B2 | DF | AA61GN | 6.04 | 0.017 | 0.353 | 0.24% | 2 | 3 | 0.9379 | 10.0, 7.14, 5.10, 3.64, 2.60, 1.86, 1.33, 0.949 | 1.4 | YES | | | SLS-B7 |
| B3 | DF | AA61GN | 6.31 | 0.017 | 0.442 | 3.25% | 2 | 4 | 0.9544 | 10.0, 7.14, 5.10, 3.64, 2.60, 1.86, 1.33, 0.949 | 1.4 | YES | | | SLS-B8 |
| ***ECBC*** | | | | | | | | | | | | | | | |

# 3T3 NRU Reference Substance Data

| Experiment ID 3T3 Cells | Assay Type[1] | Substance ID | $IC_{50}$ (ug/mL) | $IC_{50}$ (mM) | Mean VC OD[2] | Difference of right/left VC from mean VC[3] | Number of Points 0 - 50 %[4] | Number of Points 50 - 100 %[5] | $R^2$ [6] | Exposure Concentrations (ug/mL)[7] | Dilution Factor[8] | Acceptable Tests[9] | Rationale for Unacceptability | Notes | PC ID |
|---|---|---|---|---|---|---|---|---|---|---|---|---|---|---|---|
| AA61KS-A1 | RF | AA61KS | 5.48 | 0.015 | 0.301 | 6.79% | 2 | 1 | 0.9864 | 10000,1000, 100, 10, 1,0.1, 0.01, 0.001 | 10 | RF | range finder | | SLS-P11 |
| AA61KS-B1 | DF | AA61KS | 3.47 | 0.010 | 0.518 | 5.60% | 4 | 3 | 0.9823 | 100, 46.5, 21.6, 10.1, 4.68, 2.18, 1.01, 0.47 | 2.15 | YES | | | SLS-P31 |
| AA61KS-B2 | DF | AA61KS | 3.26 | 0.009 | 0.423 | 8.46% | 4 | 3 | 0.9818 | 100, 46.5, 21.6, 10.1, 4.68, 2.18, 1.01, 0.47 | 2.15 | YES | | | SLS-P33 |
| AA61KS-B3 | DF | AA61KS | 4.89 | 0.013 | 0.721 | 3.07% | 5 | 3 | 0.9904 | 100, 46.5, 21.6, 10.1, 4.68, 2.18, 1.01, 0.47 | 2.15 | YES | | | SLS-P35 |
| ***FRAME*** | | | | | | | | | | | | | | | |
| FAL.3T3.NV.A1.21.05.04 | RF | AA61NV | 9.05 | 0.025 | 0.484 | 4.80% | 2 | 0 | 0.9320 | 10000, 1000, 100, 10, 1, 0.1, 0.01, 0.001 | 10 | RF | range finder | | FAL.3T3.SLS.21.05.04 |
| FAL.3T3.NV.B1.04.06.04 | DF | AA61NV | 76.7 | 0.212 | 0.468 | 11.19% | 1 | 1 | 0.7598 | 100, 68.0, 46.3, 31.5, 21.4, 14.6, 9.91, 6.74 | 1.47 | YES | | | FAL.3T3.SLS.04.06.04 |
| FAL.3T3.NV.B2.18.06.04 | DF | AA61NV | 20.4 | 0.056 | 0.720 | 0.86% | 8 | 0 | 0.9479 | 100, 82.6, 68.3, 56.4, 46.7, 38.6, 31.9, 26.3 | 1.21 | YES | | C8 % viability < 20; used lowest dilution factor; pass even though not enough points between 0-100% | FAL.3T3.SLS.18.06.04 |
| FAL.3T3.NV.B3.08.07.04 | DF | AA61NV | NA | NA | 0.370 | 4.61% | 6 | 0 | NA | 100, 46.5, 21.6, 10.1, 4.7, 2.2, 1.01, 0.47 | 2.15 | NO | no points between 50 - 100% | | FAL.3T3.SLS.08.07.04 |
| FAL.3T3.NV.B4.16.07.04 | DF | AA61NV | 11.1 | 0.031 | 0.384 | 6.76% | 2 | 1 | 0.8922 | 100, 31.6, 10.0, 3.2, 1.0, 0.3, 0.100, 0.032 | 3.16 | YES | | | FAL.3T3.SLS.16.07.04 |

## DISULFOTON

| | | | | | | | | | | | | | | | |
|---|---|---|---|---|---|---|---|---|---|---|---|---|---|---|---|
| ***IIVS*** | | | | | | | | | | | | | | | |
| A1 | RF | AA61FC | 95.1 | 0.346 | 0.255 | 12.80% | 2 | 1 | 0.4754 | 1000, 100, 10, 1, 0.1, 0.01, 0.001, 0.0001 | 10 | RF | range finder | *the solvent controls were treated with 1% DMSO, rather than 0.5%;* | SLS-A4 |
| B1 | DF | AA61FC | 25.4 | 0.093 | 0.437 | 5.32% | 5 | 3 | 0.9601 | 200, 125, 78.1, 48.8, 30.5, 19.1, 11.9, 7.45 | 1.6 | YES | | ppt in 2X C1-C4; outlier removed by SD | SLS-B5 |
| B2 | DF | AA61FC | 46.3 | 0.169 | 0.269 | 7.62% | 3 | 4 | 0.9111 | 200, 125, 78.1, 48.8, 30.5, 19.1, 11.9, 7.45 | 1.6 | YES | | ppt in 2X C1-C4 | SLS-B13 |
| B3 | DF | AA61FC | NA | NA | NA | NA | NA | NA | NA | NA | NA | NO | PC failed | | SLS-B14 |
| B4 | DF | AA61FC | 138 | 0.504 | 0.294 | 0.57% | 1 | 7 | 0.9243 | 200, 125, 78.1, 48.8, 30.5, 19.1, 11.9, 7.45 | 1.6 | YES | | ppt in 2X C1 | SLS-B15 |
| B5 | DF | AA61FC | 31.8 | 0.116 | 0.259 | 11.99% | 5 | 3 | 0.9540 | 200, 125, 78.1, 48.8, 30.5, 19.1, 11.9, 7.45 | 1.6 | YES | | ppt in 2x C1-C4 | SLS-B16 |
| ***ECBC*** | | | | | | | | | | | | | | | |
| AA61NY-A1 | RF | AA61NY | NA | NA | 0.247 | 1.18% | 0 | 6 | NA | 1000, 100, 10, 1, 0.1, 0.01, 0.001, 0.0001 | 10 | RF | range finder; PC failed; no points between 0-50% | ppt in 2X C1-C2 | SLS-P51 |
| AA61NY-B1 | DF | AA61NY | 155 | 0.564 | 0.379 | 1.45% | 3 | 4 | 0.9199 | 500, 233, 108, 50.3, 23.4, 10.9, 5.1, 2.4 | 2.15 | YES | | ppt in 2X C1-C4; ppt in 1X C1-C3 | SLS-P67 |
| AA61NY-B2 | DF | AA61NY | NA | NA | 0.356 | 4.07% | 0 | 8 | NA | 500, 233, 108, 50.3, 23.4, 10.9, 5.1, 2.4 | 2.15 | NO | no points between 0 - 50% | small pieces of chemical in 1X C1-C4 | SLS-P69 |
| AA61NY-B3 | DF | AA61NY | 54.6 | 0.199 | 0.398 | 0.71% | 4 | 4 | 0.9654 | 1000, 465, 216, 101, 46.8, 21.8, 10.1, 4.71 | 2.15 | YES | | small globules in 1X C1-C5 & 2X C1-C3; SD removed C1 from PRISM analysis; C1 toxicity < C2 | SLS-P72 |
| AA61NY-B4 | DF | AA61NY | 201 | 0.734 | 0.406 | 2.30% | 1 | 7 | 0.8792 | 1000, 465, 216, 101, 46.8, 21.8, 10.1, 4.71 | 2.15 | YES | | small globules in 1X C1-C6; ppt in 2X C1-C5; SD removed C1 & C2 from PRISM analysis; C1 & C2 toxicity < C3 | SLS-P74 |
| ***FRAME*** | | | | | | | | | | | | | | | |
| FAL.3T3.LC.A1.10.09.04 | RF | AA61LC | 1070 | 3.914 | 0.258 | 10.84% | 0 | 3 | 0.3989 | 1000, 100, 10, 1, 0.1, 0.01, 0.001, 0.0001 | 10 | RF | range finder; no points between 0 -- 50% | ppt in 1X C1 | FAL.3T3.SLS.10.09.04 |

# 3T3 NRU Reference Substance Data

| Experiment ID 3T3 Cells | Assay Type[1] | Substance ID | $IC_{50}$ (ug/mL) | $IC_{50}$ (mM) | Mean VC OD[2] | Difference of right/left VC from mean VC[3] | Number of Points 0 - 50 %[4] | Number of Points 50 - 100 %[5] | $R^2$ [6] | Exposure Concentrations (ug/mL)[7] | Dilution Factor[8] | Acceptable Tests[9] | Rationale for Unacceptability | Notes | PC ID |
|---|---|---|---|---|---|---|---|---|---|---|---|---|---|---|---|
| FAL.3T3.LC.B1.16.09.04 | DF | AA61LC | 11200 | 40.793 | 0.254 | 2.23% | 1 | 6 | 0.8311 | 2500, 1163, 541, 252, 117, 54.4, 25.3, 11.8 | 2.15 | YES | | outlier removed bySD; ppt in 1X C1 and 2X C1-C5; IC50 out of synch with other IC50s | FAL.3T3.SLS.16.09.04 |
| FAL.3T3.LC.B2.15.10.04 | DF | AA61LC | NA | NA | 0.257 | 1.49% | 0 | 8 | 0.4810 | 2500, 1163, 541, 252, 117, 54.4, 25.3, 11.8 | 2.15 | NO | no points between 0 - 50% | ppt in 1X C1-C6; | FAL.3T3.SLS.15.10.04 |
| FAL.3T3.LC.B3.19.11.04 | DF | AA61LC | NA | NA | 0.260 | 13.68% | 0 | 6 | 0.6459 | 2500, 1163, 541, 252, 117, 54.4, 25.3, 11.8 | 2.15 | NO | no points between 0 - 50% | ppt in 1X C1-C6; ppt in 2X C1-C3 | FAL.3T3.SLS.19.11.04 |
| **ENDOSULFAN** | | | | | | | | | | | | | | | |
| ***IIVS*** | | | | | | | | | | | | | | | |
| A1 | RF | AA61HZ | 1.3 | 0.003 | 0.366 | 49.45% | 1 | 6 | 0.9673 | 100, 10, 1, 0.1, 0.01, 0.001, 0.0001, 0.00001 | 10 | RF | range finder | VC1 Ods < VC2 ODs; VC1 removed from subsequent analysis; ppt in 2X C1 and 1X C1;volatility issues | SLS-A2 |
| B1 | DF | AA61HZ | 5.35 | 0.013 | 0.397 | 1.30% | 3 | 5 | 0.9207 | 30.0, 16.7, 9.26, 5.14, 2.86, 1.59, 0.882, 0.490 | 1.8 | YES | | ppt in 2X C1; outlier removed by SD; plate sealer | SLS-B5 |
| B2 | DF | AA61HZ | 13.6 | 0.033 | 0.261 | 20.27% | 3 | 3 | 0.9195 | 50.0, 27.8, 15.4,8.57, 4.76, 2.65, 1.47, 0.817 | 1.8 | NO | % VC difference > 15 | ppt in 2X C1; very high OD value in VC1 | SLS-B13 |
| B3 | DF | AA61HZ | NA | NA | NA | NA | NA | NA | NA | NA | NA | NO | PC failed | | SLS-B14 |
| B4 | DF | AA61HZ | 1.64 | 0.004 | 0.302 | 42.29% | 6 | 2 | 0.7300 | 50.0, 27.8, 15.4,8.57, 4.76, 2.65, 1.47, 0.817 | 1.8 | NO | % VC difference > 15 | ppt in 2X C1-C2; low ODs in VC1; used VC2 value for viability calculations | SLS-B15 |
| B5 | DF | AA61HZ | 2.52 | 0.006 | 0.256 | 3.03% | 6 | 2 | 0.6745 | 50.0, 27.8, 15.4,8.57, 4.76, 2.65, 1.47, 0.817 | 1.8 | YES | | ppt in 2X C1-C2 | SLS-B16 |
| B6 | DF | AA61HZ | 2.95 | 0.007 | 0.256 | 14.77% | 5 | 2 | 0.7624 | 50.0, 27.8, 15.4,8.57, 4.76, 2.65, 1.47, 0.817 | 1.8 | YES | | ppt in 2X C1-C2 | SLS-B17 |
| ***ECBC*** | | | | | | | | | | | | | | | |
| AA61LG-A1 | RF | AA61LG | NA | NA | 0.237 | 18.26% | 2 | 2 | NA | 100, 10, 1, 0.1, 0.01, 0.001, 0.0001, 0.00001 | 10 | RF | range finder; PC failed; % VC difference > 15 | ppt in 2X C1 | SLS-P51 |
| AA61LG-B1 | DF | AA61LG | NA | NA | 0.383 | 25.75% | 5 | 2 | NA | 80.0, 37.2, 17.3, 8.05, 3.74, 1.74, 0.81, 0.38 | 2.15 | NO | % VC difference > 15 | ppt in 2X C1 | SLS-P55 |
| AA61LG-B2 (sealer) | DF | AA61LG | NA | NA | 0.445 | 5.26% | 7 | 1 | NA | 60.0, 27.9, 13.0, 6.04, 2.81, 1.31, 0.61, 0.28 | 2.15 | NO | PC failed | ppt in 2X C1 | SLS-P56 |
| AA61LG-B3 (sealer) | DF | AA61LG | 4.15 | 0.010 | 0.217 | 8.65% | 3 | 5 | 0.9066 | 30.0, 14.0, 6.49, 3.02, 1.40, 0.65, 0.30, 0.14 | 2.15 | YES | | | SLS-P58 |
| AA61LG-B4 (sealer) | DF | AA61LG | 2.98 | 0.007 | 0.319 | 13.07% | 3 | 5 | 0.8831 | 30.0, 14.0, 6.49, 3.02, 1.40, 0.65, 0.30, 0.14 | 2.15 | YES | | | SLS-P63 |
| AA61LG-B5 (sealer) | DF | AA61LG | 8.68 | 0.021 | 0.338 | 4.57% | 2 | 6 | 0.9264 | 30.0, 14.0, 6.49, 3.02, 1.40, 0.65, 0.30, 0.14 | 2.15 | YES | | ppt in 2X C1-C3 | SLS-P64 |
| ***FRAME*** | | | | | | | | | | | | | | | |
| FAL.3T3.PW.A1.01/04/04 | RF | AA61PW | 52500 | 128.974 | 0.209 | 16.91% | 0 | 2 | 0.3175 | 10.0, 1.0, 0.1, 0.01, 0.001, 0.0001, 0.00001, 0.000001, | 10 | RF | range finder | possible volatility problem | FAL.3T3.SLS.01/04/04 |
| FAL.3T3.PW.B1.29/04/04 (should be A2) | DF | AA61PW | 0.249 | 0.001 | 0.261 | 24.71% | 2 | 5 | 0.4825 | 10.0, 4.65, 2.16, 1.01, 0.468, 0.218, 0.101, 0.047 | 2.15 | NO | %VC difference > 15 | NR crystals; high background | FAL.3T3.SLS.29/04/04 |
| FAL.3T3.PW.B2.29/04/04 (should be B1) | DF | AA61PW | 22.9 | 0.056 | 0.241 | 29.31% | 2 | 6 | 0.3954 | 50.0, 34.0, 23.1, 15.7, 10.7, 7.3, 5.0, 3.4 | 1.47 | NO | %VC difference > 15 | possible volatility problem | FAL.3T3.SLS.07/05/04 |
| FAL.3T3.PW.B2.20/05/04 | DF | AA61PW | 32.7 | 0.080 | 0.324 | 10.51% | 1 | 7 | 0.3827 | 50.0, 34.0, 23.1, 15.7, 10.7, 7.3, 5.0, 3.4 | 1.47 | YES | | | FAL.3T3.SLS.20/05/04 |
| FAL.3T3.PW.B3.27/05/04 | DF | AA61PW | 6.47 | 0.016 | 0.444 | 1.54% | 6 | 2 | 0.7075 | 50.0, 34.0, 23.1, 15.7, 10.7, 7.3, 5.0, 3.4 | 1.47 | YES | | | FAL.3T3.SLS.27/05/04 |
| FAL.3T3.PW.B4.17/06/04 | DF | AA61PW | 11.2 | 0.028 | 0.396 | 5.49% | 7 | 1 | 0.7541 | 100, 68.0, 46.3, 31.5, 21.4, 14.6, 9.91, 6.74 | 1.47 | YES | | | FAL.3T3.SLS.17.06.04 |
| FAL.3T3.PW.B5.24/06/04 | DF | AA61PW | 10.4 | 0.026 | 0.408 | 5.45% | 1 | 6 | 0.8455 | 100, 46.5, 21.6, 10.1, 4.68, 2.18, 1.01, 0.47 | 2.15 | YES | | | FAL.3T3.SLS.24.06.04 |

# 3T3 NRU Reference Substance Data

| Experiment ID 3T3 Cells | Assay Type[1] | Substance ID | $IC_{50}$ (ug/mL) | $IC_{50}$ (mM) | Mean VC OD[2] | Difference of right/left VC from mean VC[3] | Number of Points 0 - 50 %[4] | Number of Points 50 - 100 %[5] | $R^2$ [6] | Exposure Concentrations (ug/mL)[7] | Dilution Factor[8] | Acceptable Tests[9] | Rationale for Unacceptability | Notes | PC ID |
|---|---|---|---|---|---|---|---|---|---|---|---|---|---|---|---|
| **EPINEPHRINE BITARTRATE** | | | | | | | | | | | | | | | |
| ***IIVS*** | | | | | | | | | | | | | | | |
| A1 | RF | AA61LT | 34.4 | 0.103 | 0.460 | 5.31% | 0 | 2 | 0.9689 | 1000, 100, 10, 1, 0.1, 0.01, 0.001, 0.0001 | 10 | RF | range finder | | SLS-A2 |
| B1 | DF | AA61LT | 61.8 | 0.185 | 0.429 | 3.46% | 1 | 6 | 0.8482 | 100, 71.4, 51.0, 36.4, 26.0, 18.6, 13.3, 9.49, | 1.4 | YES | | | SLS-B1 |
| B2 | DF | AA61LT | 65.5 | 0.196 | 0.413 | 3.71% | 0 | 6 | 0.8365 | 100, 71.4, 51.0, 36.4, 26.0, 18.6, 13.3, 9.49, | 1.4 | YES | | SMT accepts this test in spite of no points between 0-50%; agreed to on 8/12/04 | SLS-B2 |
| B3 | DF | AA61LT | 62.8 | 0.188 | 0.388 | 2.42% | 2 | 6 | 0.8693 | 100, 71.4, 51.0, 36.4, 26.0, 18.6, 13.3, 9.49, | 1.4 | YES | | | SLS-B3 |
| ***ECBC*** | | | | | | | | | | | | | | | |
| AA61HW-A1 | RF | AA61HW | 25.4 | 0.076 | 0.280 | 0.36% | 2 | 1 | 0.9466 | 10000,1000, 100, 10, 1,0.1, 0.01, 0.001 | 10 | RF | range finder | | SLS-P5 |
| AA61HW-B1 | DF | AA61HW | 58.5 | 0.175 | 0.682 | 5.06% | 1 | 6 | 0.8963 | 100, 68.0, 46.3, 31.5, 21.4, 14.6, 9.91, 6.74 | 1.47 | YES | | | SLS-P23 |
| AA61HW-B2 | DF | AA61HW | 46.8 | 0.140 | 0.582 | 3.32% | 2 | 6 | 0.9135 | 100, 68.0, 46.3, 31.5, 21.4, 14.6, 9.91, 6.74 | 1.47 | YES | | | SLS-P27 |
| AA61HW-B3 | DF | AA61HW | 49.3 | 0.148 | 0.440 | 2.56% | 1 | 6 | 0.9306 | 100, 68.0, 46.3, 31.5, 21.4, 14.6, 9.91, 6.74 | 1.47 | YES | | | SLS-P29 |
| ***FRAME*** | | | | | | | | | | | | | | | |
| FAL.3T3.RK.A1.01/04/04 | RF | AA61RK | 37.2 | 0.112 | 0.361 | 17.45% | 3 | 0 | 0.8041 | 10000, 1000, 100, 10, 1, 0.1, 0.01, 0.001 | 10 | RF | range finder | possible volatility problem | FAL.3T3.SLS.01/04/04 |
| FAL.3T3.RK.B1.29/04/04 | DF | AA61RK | 79.4 | 0.238 | 0.349 | 2.51% | 1 | 0 | 0.9283 | 100, 46.5, 21.6, 10.1, 4.68, 2.18, 1.01, 0.47 | 2.15 | NO | no points between 50 - 100% | | FAL.3T3.SLS.29/04/04 |
| FAL.3T3.RK.B2.06/05/04 | DF | AA61RK | 70.5 | 0.211 | 0.341 | 4.84% | 2 | 1 | 0.9573 | 100, 82.6, 68.3, 56.4, 46.7, 38.6, 31.9, 26.3 | 1.21 | YES | | | FAL.3T3.SLS.06/05/04 |
| FAL.3T3.RK.B3.20/05/04 | DF | AA61RK | 62.2 | 0.187 | 0.407 | 6.36% | 1 | 0 | 0.9364 | 200, 165, 137, 113, 93.3, 77.1, 63.7, 52.7 | 1.21 | YES | | lowest dilution factor used; SMT will accept this test | FAL.3T3.SLS.20/05/04 |
| FAL.3T3.RK.B4.27/05/04 | DF | AA61RK | 57.4 | 0.172 | 0.490 | 12.09% | 2 | 1 | 0.8531 | 100, 82.6, 68.3, 56.4, 46.7, 38.6, 31.9, 26.3 | 1.21 | YES | | | FAL.3T3.SLS.27/05/04 |
| **ETHANOL** | | | | | | | | | | | | | | | |
| ***IIVS*** | | | | | | | | | | | | | | | |
| A2 | RF | AA61FH | NA | NA | 0.416 | 0.36% | 0 | 8 | NA | 10000, 1000, 100, 10, 1, 0.1, 0.01, 0.001 | 10 | RF | range finder | | SLS-A3 |
| B1 | DF | AA61FH | 12500 | 270.758 | 0.154 | 83.09% | 4 | 1 | 0.9319 | 100000, 71429, 51020, 36443, 26031, 18593, 13281, 9486 | 1.4 | NO | % VC difference > 15 | VC1 ODs < VC2 ODs; VC1 removed from subsequent analysis; volatility issues. | SLS-B6 |
| B2 | DF | AA61FH | 7140 | 155.089 | 0.400 | 8.34% | 4 | 0 | 0.9518 | 100000, 71429, 51020, 36443, 26031, 18593, 13281, 9486 | 1.4 | NO | no points between 50--100% | ppt in 1X C1-C3; plates read 15-16 hr late; orignial reading used wrong OD wavelength; outliers removed by SD; plate sealer used | SLS-B11 |
| B3 | DF | AA61FH | 5200 | 112.871 | 0.388 | 2.54% | 8 | 0 | 0.8605 | 20000, 16667, 13889, 11574, 9645, 8038, 6698, 5582 | 1.2 | NO | no points between 50--100%; | plate sealer used | SLS-B12 |
| B4 | DF | AA61FH | 6760 | 146.751 | 0.384 | 4.75% | 6 | 2 | 0.8518 | 20000, 16667, 13889, 11574, 9645, 8038, 6698, 5582 | 1.2 | YES | | plate sealer used; outliers removed bySD | SLS-B13 |
| B5 | DF | AA61FH | NA | NA | NA | NA | NA | NA | NA | NA | NA | NO | PC failed | | SLS-B14 |
| B6 | DF | AA61FH | 6070 | 131.699 | 0.458 | 1.89% | 4 | 4 | 0.9316 | 20000, 14286, 10204, 7289, 5206, 3719, 2656, 1897 | 1.4 | YES | | | SLS-B15 |
| B7 | DF | AA61FH | 6410 | 139.182 | 0.322 | 8.21% | 4 | 3 | 0.9515 | 20000, 14286, 10204, 7289, 5206, 3719, 2656, 1897 | 1.4 | YES | | plate sealer used; outliers removed by SD | SLS-B16 |

# 3T3 NRU Reference Substance Data

| Experiment ID 3T3 Cells | Assay Type[1] | Substance ID | $IC_{50}$ (ug/mL) | $IC_{50}$ (mM) | Mean VC $OD^2$ | Difference of right/left VC from mean VC[3] | Number of Points 0 - 50 %[4] | Number of Points 50 - 100 %[5] | $R^2$ [6] | Exposure Concentrations (ug/mL)[7] | Dilution Factor[8] | Acceptable Tests[9] | Rationale for Unacceptability | Notes | PC ID |
|---|---|---|---|---|---|---|---|---|---|---|---|---|---|---|---|
| ***ECBC*** | | | | | | | | | | | | | | | |
| AA61JU-A1 | RF | AA61JU | NA | NA | 0.322 | 0.67% | 0 | 2 | NA | 10000,1000, 100, 10, 1,0.1, 0.01, 0.001 | 10 | RF | range finder | no toxicity detected | SLS-P6 |
| AA61JU-A2 | RF | AA61JU | NA | NA | 0.193 | 57.54% | 2 | 2 | NA | 100000, 10000, 1000, 100, 10, 10, 0.1, 0.01 | 10 | RF | range finder | probable volatility problem; VC1 <<< VC2 | SLS-P8 |
| AA61JU-B1(sealer) | DF | AA61JU | NA | NA | 0.134 | 49.27% | 6 | 1 | NA | 100000, 68027, 46277, 31481, 21416, 14568, 9911, 6742 | 1.47 | NO | % VC difference > 15 | volatility problem | SLS-P37 |
| AA61JU-B2 (sealer) | DF | AA61JU | NA | NA | 0.255 | 10.33% | 4 | 0 | NA | 68027, 46277, 31481, 21416, 14568, 9910, 6742, 4586 | 1.47 | NO | no points between 50 - 100% | | SLS-P39 |
| AA61JU-B3(sealer) | DF | AA61JU | NA | NA | 0.218 | 19.55% | 8 | 0 | NA | 40000, 33058, 27321, 22579, 18660, 15422, 12745, 10533 | 1.21 | NO | no points between 50 - 100% | | SLS-P47 |
| AA61JU-B4 (sealer) | DF | AA61JU | NA | NA | 0.234 | 15.04% | 7 | 0 | NA | 30000, 24793, 20490, 16934, 13995, 11566, 9559, 7900 | 1.21 | NO | PC failed | dilution factor is 1.21; no points between 50-100%; test would pass due to dilution factor | SLS-P50 |
| AA61JU-B5 (sealer) | DF | AA61JU | NA | NA | 0.250 | 9.95% | 7 | 1 | NA | 20000, 16529, 13660, 11289, 9330, 7711, 6373, 5267 | 1.21 | NO | PC failed | | SLS-P52 |
| AA61JU-B6 (sealer) | DF | AA61JU | 5400 | 117.107 | 0.556 | 6.34% | 3 | 5 | 0.8953 | 15000, 10204, 6942, 4722, 3212, 2185, 1487, 1011 | 1.47 | NO | PC failed | | SLS-P60 |
| AA61JU-B7 (sealer) | DF | AA61JU | 6300 | 136.641 | 0.478 | 17.05% | 3 | 5 | 0.9477 | 15000, 10204, 6942, 4722, 3212, 2185, 1487, 1011 | 1.47 | NO | % VC difference > 15 | | SLS-P62 |
| AA61JU-B8 (sealer) | DF | AA61JU | 4860 | 105.580 | 0.389 | 3.72% | 3 | 5 | 0.9188 | 15000, 10204, 6942, 4722, 3212, 2185, 1487, 1011 | 1.47 | YES | | | SLS-P64 |
| AA61JU-B9 (sealer) | DF | AA61JU | 7310 | 158.702 | 0.416 | 6.29% | 2 | 6 | 0.8826 | 15000, 10204, 6942, 4722, 3212, 2185, 1487, 1011 | 1.47 | YES | | | SLS-P66 |
| AA61JU-B10 (sealer) | DF | AA61JU | 3910 | 84.836 | 0.393 | 5.15% | 4 | 4 | 0.9316 | 15000, 10204, 6942, 4722, 3212, 2185, 1487, 1011 | 1.47 | YES | | | SLS-P68 |
| ***FRAME*** | | | | | | | | | | | | | | | |
| FAL.3T3.PC.A1.30/04/04 | RF | AA61PC | NA | NA | 0.224 | 10.66% | 0 | 1 | 0.0000 | 10000, 1000, 100, 10, 1, 0.1, 0.01, 0.001 | 10 | RF | range finder | | FAL.3T3.SLS.30/04/04 |
| FAL.3T3.PC.B1.06/05/04 | DF | AA61PC | NA | NA | 0.190 | 26.31% | 0 | 5 | 0.7166 | 50000, 34014, 23139, 15741, 10708, 7284, 4955, 3371 | 1.47 | NO | no points between 0 - 50%; %VC difference > 15 | | FAL.3T3.SLS.06/05/04 |
| FAL.3T3.PC.B2.20/05/04 | DF | AA61PC | 14200 | 308.732 | 0.223 | 34.53% | 3 | 3 | 0.8898 | 50000, 34014, 23139, 15741, 10708, 7284, 4955, 3371 | 1.47 | NO | %VC difference > 15; volatility problem | | FAL.3T3.SLS.20/05/04 |
| FAL.3T3.PC.B2.27/05/04 should be B3 | DF | AA61PC | 8300 | 180.128 | 0.412 | 19.58% | 4 | 3 | 0.9538 | 50000, 34014, 23139, 15741, 10708, 7284, 4955, 3371 | 1.47 | NO | %VC difference > 15; volatility problem | | FAL.3T3.SLS.27/05/04 |
| FAL.3T3.PC.B4.17/06/04 | DF | AA61PC | 44000 | 954.073 | 0.462 | 10.31% | 0 | 0 | 0.9212 | 50000, 34014, 23139, 15741, 10708, 7284, 4955, 3371 | 1.47 | NO | no points between 0 - 100% | | FAL.3T3.SLS.17.06.04 |
| FAL.3T3.PC.B5.24/06/04 | DF | AA61PC | 7110 | 154.377 | 0.311 | 6.43% | 6 | 2 | 0.9785 | 50000, 34014, 23139, 15741, 10708, 7284, 4955, 3371 | 1.47 | YES | | | FAL.3T3.SLS.24.06.04 |
| FAL.3T3.PC.B6.08.07.04 | DF | AA61PC | 9480 | 205.865 | 0.234 | 14.05% | 4 | 4 | 0.8796 | 40000, 27211, 18511, 12592, 8566, 5827, 3964, 2697 | 1.47 | YES | | | FAL.3T3.SLS.08.07.04 |
| FAL.3T3.PC.B7.16.07.04 | DF | AA61PC | 8670 | 188.184 | 0.308 | 13.82% | 4 | 4 | 0.9668 | 40000, 27211, 18511, 12592, 8566, 5827, 3964, 2697 | 1.47 | YES | | | FAL.3T3.SLS.16.07.04 |

# 3T3 NRU Reference Substance Data

| Experiment ID 3T3 Cells | Assay Type[1] | Substance ID | $IC_{50}$ (ug/mL) | $IC_{50}$ (mM) | Mean VC OD[2] | Difference of right/left VC from mean VC[3] | Number of Points 0 - 50 %[4] | Number of Points 50 - 100 %[5] | $R^2$ [6] | Exposure Concentrations (ug/mL)[7] | Dilution Factor[8] | Acceptable Tests[9] | Rationale for Unacceptability | Notes | PC ID |
|---|---|---|---|---|---|---|---|---|---|---|---|---|---|---|---|
| **ETHYLENE GLYCOL** | | | | | | | | | | | | | | | |
| ***IIVS*** | | | | | | | | | | | | | | | |
| A1 Preliminary | RF | AA61HR | 15700 | 252.899 | 0.430 | 9.87% | 0 | 1 | 0.5803 | 10000, 1000, 100, 10, 1, 0.1, 0.01, 0.001 | 10 | RF | range finder | | SLS-A1 |
| B1 | DF | AA61HR | 27100 | 436.534 | 0.489 | 7.90% | 2 | 2 | 0.9878 | 100000, 56250, 31600, 17800, 10000, 5600, 3160, 1770 | 1.78 | YES | | | SLS-B1 |
| B2 | DF | AA61HR | 22400 | 360.825 | 0.505 | 4.97% | 2 | 3 | 0.9713 | 100000, 56250, 31600, 17800, 10000, 5600, 3160, 1770 | 1.78 | YES | | | SLS-B2 |
| B3 | DF | AA61HR | 28200 | 454.253 | 0.573 | 5.77% | 2 | 5 | 0.9449 | 100000, 56250, 31600, 17800, 10000, 5600, 3160, 1770 | 1.78 | YES | | | SLS-B3 |
| ***ECBC*** | | | | | | | | | | | | | | | |
| ECBC-3T3-lb-01 AA61LM-A1 | RF | AA61LM | 13000 | 209.407 | 0.288 | 17.62% | 0 | 3 | 0.05128 | 10000, 1000, 100, 10, 1, 0.1, 0.01, 0.001 | 10 | RF | range finder | | SLS-P1 |
| ECBC-3T3-lb-02 AA61LM-A2 | RF | AA61LM | 18000 | 289.948 | 0.238 | 13.45% | 0 | 3 | 0.7979 | 10000, 1000, 100, 10, 1, 0.1, 0.01, 0.001 | 10 | RF | No points between 10 and 50%; r2 < 0.8; PC failed; range finder | | SLS-P3 |
| ECBC-3T3-lb-03 AA61LM-B1 | DF | AA61LM | 21200 | 341.495 | 0.408 | 19.53% | 3 | 2 | 0.9087 | 100000, 68000, 46300, 31500, 21400, 14600, 9910, 6740 | 1.47 | NO | VC difference > 15%: PC failed | | SLS-P4 |
| ECBC-3T3-lb-04 AA61LM-B2 | DF | AA61LM | 19200 | 309.278 | 0.839 | 4.60% | 3 | 3 | 0.9718 | 100000, 68000, 46300, 31500, 21400, 14600, 9910, 6740 | 1.47 | YES | | | SLS-P5 |
| ECBC-3T3-lb-05 AA61LM-B3 | DF | AA61LM | 16100 | 259.343 | 0.445 | 8.06% | 3 | 3 | 0.9290 | 100000, 68000, 46300, 31500, 21400, 14600, 9910, 6740 | 1.47 | YES | | | SLS-P7 |
| ECBC-3T3-lb-06 AA61LM-B4 | DF | AA61LM | 19900 | 320.554 | 0.554 | 2.47% | 3 | 3 | 0.9186 | 100000, 68000, 46300, 31500, 21400, 14600, 9910, 6740 | 1.47 | YES | | | SLS-P9 |
| ECBC-3T3-lb-07 AA61LM-B5 | DF | AA61LM | 16500 | 265.786 | 0.480 | 16.31% | 3 | 3 | 0.9611 | 100000, 68000, 46300, 31500, 21400, 14600, 9910, 6740 | 1.47 | NO | VC difference > 15% | | SLS-P12 |
| ECBC-3T3-lb-08 AA61LM-B6 | DF | AA61LM | 18100 | 291.559 | 0.529 | 1.25% | 3 | 3 | 0.9695 | 100000, 68000, 46300, 31500, 21400, 14600, 9910, 6740 | 1.47 | YES | | | SLS-P13 |
| ***FRAME*** | | | | | | | | | | | | | | | |
| A1 1b3T3RF01FALPD | RF | AA61PD | NA | NA | 0.527 | 11.89% | 0 | 0 | NA | 985, 98.5, 9.9, 1.0, 0.1, 0.0099, 0.0010, 0.0001 | | RF | range finder | | 1b3T3CRTFALSLS 12/4/02 |
| A2 1b3T3RF02FALPD | RF | AA61PD | 34800 | 560.567 | 0.449 | 6.05% | 1 | 0 | 0.9623 | 263510, 52702, 10540.4, 2108.1, 421.6, 84.3, 16.9, 3.4 | | NO | no points between 50 anad 100% | | 1b3T3CRTFALSLS 12/10/02 |
| 1b3T3DF01FALPD | DF | AA61PD | 34200 | 550.902 | 0.443 | 1.22% | 2 | 3 | 0.9645 | 182500, 124150, 85460, 57450, 39080, 26590, 18090, 12304 | | NO | PC failed | | 1b3T3CRTFALSLS 12/17/02 |
| 1b3T3DF02FALPD | DF | AA61PD | 36500 | 587.951 | 0.612 | 12.90% | 2 | 5 | 0.9340 | 100000, 68027, 46277, 31481, 21416, 14568, 9911, 6742 | | YES | | NR crystals in plate | 1b3T3CRTFALSLS 1/7/03 |
| 1b3T3DF03FALPD | DF | AA61PD | 40500 | 652.384 | 0.306 | 12.08% | 1 | 4 | 0.8911 | 100000, 68027, 46277, 31481, 21416, 14568, 9911, 6742 | | NO | NR crystals in plate; stopped after 1 h; PC failed | | 1b3T3CRTFALSLS 1/8/03 |
| 1b3T3DF04FALPD | DF | AA61PD | 27200 | 438.144 | 0.489 | 11.17% | 2 | 5 | 0.9232 | 85300, 58027, 39474, 26853, 18268, 12427, 8454, 5751 | | YES | | | 1b3T3CRTFALSLS 1/14/03 |
| 1b3T3DF05FALPD | DF | AA61PD | 41700 | 671.714 | 0.463 | 6.48% | 1 | 5 | 0.9483 | 100000, 68100, 46100, 31500, 21400, 14600, 9900, 6700 | | NO | PC failed | | 1b3T3CRTFALSLS 1/15/03 |
| 1b3T3DF06FALPD | DF | AA61PD | 23600 | 380.155 | 0.557 | 13.34% | 4 | 3 | 0.8834 | 100000, 68027, 46277, 31481, 21416, 14568, 9911, 6742 | | YES | | | 1b3T3CRTFALSLS 1/21/03 |

# 3T3 NRU Reference Substance Data

| Experiment ID 3T3 Cells | Assay Type[1] | Substance ID | $IC_{50}$ (ug/mL) | $IC_{50}$ (mM) | Mean VC OD[2] | Difference of right/left VC from mean VC[3] | Number of Points 0 - 50 %[4] | Number of Points 50 - 100 %[5] | $R^2$ [6] | Exposure Concentrations (ug/mL)[7] | Dilution Factor[8] | Acceptable Tests[9] | Rationale for Unacceptability | Notes | PC ID |
|---|---|---|---|---|---|---|---|---|---|---|---|---|---|---|---|
| 1b3T3DF07FALPD | DF | AA61PD | 39300 | 633.054 | 0.281 | 12.56% | 2 | 3 | 0.8509 | 100000, 68100, 46100, 31500, 21400, 14600, 9900, 6700 | | YES | | | 1b3T3CRTFALSLS 2/26/03 |
| **FENPROPATHRIN** | | | | | | | | | | | | | | | |
| ***IIVS*** | | | | | | | | | | | | | | | |
| A1 | RF | AA61HY | 15.3 | 0.044 | 0.359 | 2.00% | 2 | 6 | 0.9682 | 1000, 100, 10, 1, 0.1, 0.01, 0.001, 0.0001 | 10 | RF | range finder | ppt in 2X C1-C2 and 1X C1-C2 | SLS-A1 |
| B1 | DF | AA61HY | 17.7 | 0.051 | 0.454 | 5.40% | 4 | 4 | 0.9881 | 100, 62.5, 39.1, 24.4, 15.3, 9.54, 5.96, 3.73 | 1.6 | YES | | ppt in 2X C1-C3; ppt in 1X C1-C3 | SLS-B5 |
| B2 | DF | AA61HY | 18.1 | 0.05 | 0.362 | 1.43% | 4 | 3 | 0.9827 | 100, 62.5, 39.1, 24.4, 15.3, 9.54, 5.96, 3.73 | 1.6 | YES | | ppt in 2X C1-C4; ppt in 1X C1-C3 | SLS-B9 |
| B3 | DF | AA61HY | 14.4 | 0.04 | 0.371 | 0.16% | 5 | 3 | 0.9848 | 100, 62.5, 39.1, 24.4, 15.3, 9.54, 5.96, 3.73 | 1.6 | YES | | ppt in 2X C1-C4; ppt in 1X C1-C2 | SLS-B10 |
| ***ECBC*** | | | | | | | | | | | | | | | |
| AA61LJ-A1 | RF | AA61LJ | 29.5 | 0.084 | 0.290 | 2.90% | 2 | 2 | 0.8956 | 1000, 100,10, 1, 0.1, 0.01, 0.001, 0.0001 | 10 | RF | range finder | ppt in 2X C1-C2 and 1X C1-C2 | SLS-P2 |
| AA61LJ-B1 | DF | AA61LJ | 20.3 | 0.058 | 0.316 | 1.48% | 6 | 2 | 0.9404 | 150, 102, 69.4, 47.2, 32.1, 21.9, 14.9, 10.1 | 1.47 | YES | | slope & IC50 similar for B1, B2, and B3; ppt does not appear to be a factor;ppt in 2X C1-C3; ppt in 1X C1-C3 | SLS-P6 |
| AA61LJ-B2 | DF | AA61LJ | 22.3 | 0.064 | 0.254 | 6.77% | 3 | 4 | 0.9379 | 60.0, 40.8, 27.8, 18.9, 12.9, 8.7, 6.0, 4.1 | 1.47 | YES | | slope & IC50 similar for B1, B2, and B3; ppt does not appear to be a factor;ppt in 2X C1-C3 | SLS-P7 |
| AA61LJ-B3 | DF | AA61LJ | 25.1 | 0.072 | 0.471 | 3.22% | 2 | 5 | 0.9274 | 60.0, 40.8, 27.8, 18.9, 12.9, 8.74, 5.95, 4.05 | 1.47 | YES | | slope & IC50 similar for B1, B2, and B3; ppt does not appear to be a factor | SLS-16 |
| ***FRAME*** | | | | | | | | | | | | | | | |
| FAL.3T3.PT.A1.080104 | RF | AA61PT | 142 | 0.405 | 0.407 | 9.41% | 1 | 4 | 0.6639 | 1000, 100, 10, 1, 0.1, 0.01, 0.001, 0.0001 | 10 | RF | range finder | well B7 outlier; no cells; not removed by SD | FAL.3T3.SLS.080104 |
| FAL3T3.PT.A2.15-01-04 | DF | AA61PT | 54.7 | 0.157 | 0.386 | 2.12% | 5 | 3 | 0.9203 | 1000, 680, 465, 216, 100, 46.5, 21.6, 10.1 | 2.15 | NO | PC failed; | ppt in 1X C1-C5; ppt in 2X C1-C5 | FAL.3T3.SLS.15/01/04 |
| FAL3T3.PT.B1.22-01-04 | DF | AA61PT | 59.7 | 0.171 | 0.310 | 1.66% | 5 | 3 | 0.8978 | 1000, 680, 465, 216, 100, 46.5, 21.6, 10.1 | 2.15 | YES | | ppt in 1X C1-C6 and 2X C1-C5 | FAL.3T3.SLS.22/01/04 |
| FAL3T3.PT.B2.29-01-04 | DF | AA61PT | 69.0 | 0.198 | 0.362 | 7.84% | 3 | 2 | 0.9594 | 500, 233, 108, 50.3, 23.4, 10.9, 5.1, 2.4 | 2.15 | YES | | ppt in 1X C1-C2; ppt in 2X C1-C4 | FAL3T3.SLS.29-01-04 |
| FAL3T3.PT.B3.05.02.04 | DF | AA61PT | 21.6 | 0.062 | 0.259 | 4.89% | 4 | 1 | 0.9415 | 500, 233, 108, 50.3, 23.4, 10.9, 5.1, 2.4 | 2.15 | NO | PC failed; | problem with reservoir liners; ppt in 1X C1-C5 & 2X C1-C4 | FAL.3T3.SLS.5/02/04 |
| FAL3T3.PT.B4.25-02-04 | DF | AA61 PT | 29.8 | 0.085 | 0.523 | 3.33% | 4 | 2 | 0.9173 | 500, 233, 108, 50.3, 23.4, 10.9, 5.1, 2.4 | 2.15 | YES | | ppt in 1X C1-C3 & 2X C1-C2 | FAL3T3.SLS.25.02.04 |
| FAL3T3.PT.B5.17.03.04 | DF | AA61PT | 10.9 | 0.031 | 0.238 | 10.23% | 3 | 3 | 0.8792 | 500, 233, 108, 50.3, 23.4, 10.9, 5.1, 2.4 | 2.15 | YES | | ppt in 1X C1-C4 & 2X C1-C4 | FAL.3T3.SLS.17/03/04 |
| **GIBBERELLIC ACID** | | | | | | | | | | | | | | | |
| ***IIVS*** | | | | | | | | | | | | | | | |
| A1 | RF | AA61RE | NA | NA | 0.403 | 3.68% | 0 | 4 | NA | 1000, 100, 10, 1, 0.1, 0.01, 0.001, 0.0001 | 10 | RF | range finder | | SLS-A4 |
| B1 | DF | AA61RE | 13300 | 38.322 | 0.557 | 0.22% | 0 | 8 | 0.4182 | 5000, 3846, 2959, 2276, 2276, 1751, 1347, 1036, 797 | 1.3 | NO | no points between 0-50% | | SLS-B6 |
| B2 | DF | AA61RE | 7830 | 22.618 | 0.457 | 1.39% | 1 | 7 | 0.9631 | 10000, 7692, 5917, 4552, 3501, 2693, 2072, 1594 | 1.3 | YES | | plates read 15-16 hr late; orignial reading used wrong OD wavelength; ppt in 2X C1-C3 | SLS-B11 |

# 3T3 NRU Reference Substance Data

| Experiment ID 3T3 Cells | Assay Type[1] | Substance ID | $IC_{50}$ (ug/mL) | $IC_{50}$ (mM) | Mean VC OD[2] | Difference of right/left VC from mean VC[3] | Number of Points 0 - 50 %[4] | Number of Points 50 - 100 %[5] | $R^2$ [6] | Exposure Concentrations (ug/mL)[7] | Dilution Factor[8] | Acceptable Tests[9] | Rationale for Unacceptability | Notes | PC ID |
|---|---|---|---|---|---|---|---|---|---|---|---|---|---|---|---|
| B3 | DF | AA61RE | 6840 | 19.745 | 0.340 | 7.57% | 2 | 6 | 0.9288 | 10000, 7692, 5917, 4552, 3501, 2693, 2072, 1594 | 1.3 | YES | | ppt in 2X C1-C4; outlier removed bySD because well didn't receive 50 ul of growth medium during refeeding | SLS-B12 |
| B4 | DF | AA61RE | NA | NA | NA | NA | NA | NA | NA | NA | NA | NO | PC failed | | SLS-B14 |
| B5 | DF | AA61RE | 8300 | 23.958 | 0.413 | 2.36% | 1 | 7 | 0.8974 | 10000, 7692, 5917, 4552, 3501, 2693, 2072, 1594 | 1.3 | YES | | ppt in 2X C1-C3 | SLS-B15 |
| ***ECBC*** | | | | | | | | | | | | | | | |
| AA61FR-A1 | RF | AA61FR | NA | NA | 0.472 | 0.90% | 0 | 7 | NA | 1000, 100, 10, 1, 0.1, 0.01, 0.001, 0.0001 | 10 | RF | range finder | | SLS-P14 |
| AA61FR-B1 | DF | AA61FR | NA | NA | 0.385 | 3.16% | 0 | 8 | NA | 5000, 4132, 3415, 2822, 2333, 1928, 1593, 1317 | 1.21 | NO | no points between 0 - 50% | | SLS-P47 |
| AA61FR-B2 | DF | AA61FR | 9020 | 26.028 | 0.430 | 3.16% | 1 | 7 | 0.8611 | 10000, 6803, 4628, 3148, 2142, 1457, 991, 674 | 1.47 | YES | | ppt in 2X C1 | SLS-P65 |
| AA61FR-B3 | DF | AA61FR | 7820 | 22.566 | 0.436 | 1.89% | 2 | 5 | 0.9515 | 20000, 13605, 9255, 6296, 4283, 2914, 1982, 1348 | 1.47 | YES | | ppt in 2X C1-C4; ppt in 1X C1 | SLS-P67 |
| AA61FR-B4 | DF | AA61FR | 7240 | 20.914 | 0.356 | 2.99% | 3 | 4 | 0.9605 | 20000, 13605, 9255, 6296, 4283, 2914, 1982, 1348 | 1.47 | YES | | ppt in 2X C1-C4 | SLS-P69 |
| ***FRAME*** | | | | | | | | | | | | | | | |
| FAL.3T3.GY.A1.10.09.04 | RF | AA61GY | 78.3 | 0.226 | 0.293 | 5.52% | 2 | 0 | 0.9008 | 1000, 100, 10, 1, 0.1, 0.01, 0.001, 0.0001 | 10 | RF | range finder; no points between 50 - 100% | | FAL.3T3.SLS.10.09.04 |
| FAL.3T3.GY.B1.16.09.04 | DF | AA61GY | NA | NA | 0.317 | 23.98% | 0 | 0 | 0.0000 | 1000, 465, 216, 101, 46.8, 21.8, 10.1, 4.7 | 2.15 | NO | no points between 0 - 100%; %VC difference >15 | | FAL.3T3.SLS.16.09.04 addendum lists incorrect PC |
| FAL.3T3.GY.B2.15.10.04 | DF | AA61GY | NA | NA | 0.286 | 4.02% | 0 | 4 | 0.0000 | 5000, 3401, 2314, 1574, 1071, 728, 496, 337 | 1.47 | NO | no points between 0 - 50% | outlier removed by SD | FAL.3T3.SLS.15.10.04 |
| FAL.3T3.GY.B3.25.11.04 | DF | AA61GY | NA | NA | 0.342 | 6.74% | 0 | 2 | 0.0000 | 5000, 3401, 2314, 1574, 1071, 728, 496, 337 | 1.47 | NO | no points between 0 - 50% | | FAL.3T3.SLS.25.11.04 |

## GLUTETHIMIDE

| | | | | | | | | | | | | | | | |
|---|---|---|---|---|---|---|---|---|---|---|---|---|---|---|---|
| ***IIVS*** | | | | | | | | | | | | | | | |
| A1 | RF | AA61NN | 80.5 | 0.371 | 0.294 | 7.00% | 2 | 6 | 0.9499 | 1000, 100, 10, 1, 0.1, 0.01, 0.001, 0.0001 | 10 | RF | range finder | ppt in 2X C1 | SLS-A5 |
| B1 | DF | AA61NN | 139 | 0.640 | 0.374 | 6.19% | 3 | 5 | 0.9421 | 500, 313, 195, 122, 76.3, 47.7, 29.8, 18.6 | 1.6 | YES | | | SLS-B6 |
| B2 | DF | AA61NN | 119 | 0.548 | 0.263 | 2.36% | 4 | 4 | 0.9536 | 500, 313, 195, 122, 76.3, 47.7, 29.8, 18.6 | 1.6 | YES | | outliers removed bySD | SLS-B13 |
| B3 | DF | AA61NN | NA | NA | NA | NA | NA | NA | NA | NA | NA | NO | PC failed | | SLS-B14 |
| B4 | DF | AA61NN | 122 | 0.561 | 0.350 | 9.49% | 4 | 4 | 0.9580 | 500, 313, 195, 122, 76.3, 47.7, 29.8, 18.6 | 1.6 | YES | | | SLS-B15 |
| B5 | DF | AA61NN | 121 | 0.558 | 0.339 | 0.00% | 4 | 4 | 0.9484 | 500, 313, 195, 122, 76.3, 47.7, 29.8, 18.6 | 1.6 | YES | | | SLS-B17 |
| ***ECBC*** | | | | | | | | | | | | | | | |
| AA61FE-A1 | RF | AA61FE | 256 | 1.177 | 0.486 | 2.55% | 1 | 7 | 0.9256 | 1000, 100, 10, 1, 0.1, 0.01, 0.001, 0.0001 | 10 | RF | range finder | | SLS-16 |
| AA61FE-B1 | DF | AA61FE | 160 | 0.736 | 0.605 | 10.75% | 5 | 3 | 0.9842 | 1000, 680, 463, 315, 214, 146, 99, 67 | 1.47 | YES | | ppt in 2X C1-C2; appear oily | SLS-P44 |
| AA61FE-B2 | DF | AA61FE | 174 | 0.800 | 0.575 | 4.13% | 5 | 3 | 0.9784 | 1000, 680, 463, 315, 214, 146, 99, 67 | 1.47 | YES | | ppt in 2X C1-C2; appear oily | SLS-P46 |
| AA61FE-B3 | DF | AA61FE | 167 | 0.767 | 0.256 | 3.42% | 5 | 3 | 0.9456 | 1000, 680, 463, 315, 214, 146, 99, 67 | 1.47 | YES | | | SLS-P48 |
| ***FRAME*** | | | | | | | | | | | | | | | |
| FAL.3T3.KY.A1.21.10.04 | RF | AA61KY | 508 | 2.339 | 0.227 | 5.39% | 1 | 1 | 0.8073 | 1000, 100, 10, 1.0, 0.1, 0.01, 0.001, 0.0001 | 10 | RF | range finder | ppt in 2X C1 | FAL.3T3.SLS.21.10.04 |

# 3T3 NRU Reference Substance Data

| Experiment ID 3T3 Cells | Assay Type[1] | Substance ID | $IC_{50}$ (ug/mL) | $IC_{50}$ (mM) | Mean VC OD[2] | Difference of right/left VC from mean VC[3] | Number of Points 0 - 50 %[4] | Number of Points 50 - 100 %[5] | $R^2$ [6] | Exposure Concentrations (ug/mL)[7] | Dilution Factor[8] | Acceptable Tests[9] | Rationale for Unacceptability | Notes | PC ID |
|---|---|---|---|---|---|---|---|---|---|---|---|---|---|---|---|
| FAL.3T3.KY.B1.11.11.04 | DF | AA61KY | 303 | 1.396 | 0.268 | 4.20% | 3 | 5 | 0.9424 | 1000, 680, 463, 315, 214, 146, 99.1, 67.4 | 1.47 | YES | | ppt in 2X C1 | FAL.3T3.SLS.10.11.04 |
| FAL.3T3.KY.B2.19.11.04 | DF | AA61KY | 262 | 1.208 | 0.207 | 3.18% | 2 | 5 | 0.9086 | 1000, 680, 463, 315, 214, 146, 99.1, 67.4 | 1.47 | YES | | ppt in 2X C1 | FAL.3T3.SLS.19.11.04 |
| FAL.3T3.KY.B3.25.11.04 | DF | AA61KY | 288 | 1.327 | 0.350 | 10.56% | 2 | 5 | 0.7829 | 1000, 680, 463, 315, 214, 146, 99.1, 67.4 | 1.47 | YES | | | FAL.3T3.SLS.25.11.04 |
| **GLYCEROL** | | | | | | | | | | | | | | | |
| ***IIVS*** | | | | | | | | | | | | | | | |
| A1 | RF | AA61JF | NA | NA | 0.402 | 3.00% | 0 | 4 | 0.5520 | 10000, 1000, 100, 10, 1, 0.1, 0.01, 0.001 | 10 | RF | range finder | | SLS-A1 |
| B1 | DF | AA61JF | 38200 | 414.75 | 0.453 | 1.93% | 3 | 5 | 0.9665 | 100000, 71429, 51020, 36443, 26031, 18593, 13281, 9486 | 1.4 | YES | | | SLS-B6 |
| B2 | DF | AA61JF | 28800 | 313.175 | 0.460 | 1.18% | 4 | 4 | 0.9609 | 100000, 71429, 51020, 36443, 26031, 18593, 13281, 9486 | 1.4 | YES | | plates read 15-16 hr late; orignial reading used wrong OD wavelength | SLS-B11 |
| B3 | DF | AA61JF | 16500 | 178.973 | 0.392 | 5.33% | 4 | 2 | 0.9540 | 100000, 71429, 51020, 36443, 26031, 18593, 13281, 9486 | 1.4 | YES | | outlier removed bySD | SLS-B12 |
| ***ECBC*** | | | | | | | | | | | | | | | |
| AA61HG-A1 | RF | AA61HG | 31800 | 344.975 | 0.345 | 4.28% | 0 | 4 | 0.3823 | 10000, 1000, 100,10, 1, 0.1, 0.01, 0.001 | 10 | RF | range finder | | SLS-P1 |
| AA61HG-A2 | RF | AA61HG | 1870 | 20.314 | 0.446 | 5.59% | 1 | 2 | 0.9208 | 10000, 1000, 100,10, 1, 0.1, 0.01, 0.001 | 10 | RF | range finder | | SLS-P3 |
| AA61HG-B1 | DF | AA61HG | 23400 | 254.558 | 0.471 | 0.04% | 4 | 4 | 0.9245 | 100000, 68027, 46277, 31481, 21416, 14568, 9911, 6742 | 1.47 | YES | | | SLS-P17 |
| AA61HG-B2 | DF | AA61HG | 18800 | 204.544 | 0.434 | 1.94% | 4 | 3 | 0.9732 | 100000, 68027, 46277, 31481, 21416, 14568, 9911, 6742 | 1.47 | YES | | | SLS-P23 |
| AA61HG-B3 | DF | AA61HG | 11600 | 125.831 | 0.341 | 18.42% | 6 | 2 | 0.9815 | 100000, 68027, 46277, 31481, 21416, 14568, 9911, 6742 | 1.47 | NO | %VC difference > 15 | | SLS-P30 |
| AA61HG-B4 | DF | AA61HG | 17800 | 193.102 | 0.642 | 0.19% | 4 | 4 | 0.9798 | 68027, 46277, 31481, 21416, 14568, 9910, 6742, 4586 | 1.47 | YES | | | SLS-P36 |
| ***FRAME*** | | | | | | | | | | | | | | | |
| FAL.3T3.RA.A1.08/01/04 | RF | AA61RA | NA | NA | 0.777 | 13.65% | 0 | 8 | NA | 10000, 1000, 100, 10, 1, 0.1, 0.01, 0.001 | 10 | RF | no points between 0-50; range finder | straight line; no toxicity | FAL.3T3.SLS.080104 |
| FAL3T3.RA.A2.15-01-04 | DF | AA61RA | 11400 | 123.819 | 0.717 | 1.03% | 2 | 6 | 0.6816 | 100000, 31646, 10014, 3169, 1003, 317, 100, 31.8 | 3.16 | NO | PC failed; | | FAL.3T3.SLS.15/01/04 |
| FAL3T3.RA.B1.22-01-04 | DF | AA61RA | 5710 | 62.057 | 0.447 | 3.38% | 3 | 5 | 0.9498 | 100000, 31646, 10014, 3169, 1003, 317, 100, 31.8 | 3.16 | YES | | | FAL.3T3.SLS.22/01/04 |
| FAL3T3.RA.B2.29-01-04 | DF | AA61RA | 71800 | 779.449 | 0.481 | 1.42% | 1 | 7 | 0.9674 | 100000, 68027, 46277, 31481, 21416, 14568, 9911, 6742 | 1.47 | YES | | little variation in curve; no acidity at C1; morpholog. score didn't match NRU which was lower than expected; affect lysosomes? | FAL3T3.SLS.29-01-04 |
| FAL3T3.RA.B3.05.02-04 | DF | AA61RA | 18900 | 205.016 | 0.370 | 3.33% | 4 | 4 | 0.8908 | 100000, 68027, 46277, 31481, 21416, 14568, 9911, 6742 | 1.47 | NO | PC failed; | problem with reservoir liners | FAL.3T3.SLS.5/02/04 |
| FAL3T3.RA.B4.25-02-04 | DF | AA61RA | 49200 | 534.303 | 0.513 | 2.62% | 2 | 3 | 0.9772 | 100000, 68027, 46277, 31481, 21416, 14568, 9911, 6742 | 1.47 | YES | | | FAL3T3.SLS.25.02.04 |
| FAL3T3.RA.B5.17-03-04 | DF | AA61RA | 28800 | 313.175 | 0.438 | 7.92% | 4 | 4 | 0.9627 | 100000, 68027, 46277, 31481, 21416, 14568, 9911, 6742 | 1.47 | YES | | | FAL.3T3.SLS.17/03/04 |

# 3T3 NRU Reference Substance Data

| Experiment ID 3T3 Cells | Assay Type[1] | Substance ID | $IC_{50}$ (ug/mL) | $IC_{50}$ (mM) | Mean VC OD[2] | Difference of right/left VC from mean VC[3] | Number of Points 0 - 50 %[4] | Number of Points 50 - 100 %[5] | $R^2$ [6] | Exposure Concentrations (ug/mL)[7] | Dilution Factor[8] | Acceptable Tests[9] | Rationale for Unacceptability | Notes | PC ID |
|---|---|---|---|---|---|---|---|---|---|---|---|---|---|---|---|
| **HALOPERIDOL** | | | | | | | | | | | | | | | |
| ***IIVS*** | | | | | | | | | | | | | | | |
| A1 | RF | AA61LW | 7.60 | 0.020 | 0.290 | 0.23% | 0 | 1 | 0.4600 | 100, 10, 1, 0.1, 0.01, 0.001, 0.0001, 0.00001 | 10 | RF | range finder | the solvent controls were treated with 1% DMSO, rather than 0.5%.; ppt in 1X C1-C2 | SLS-A4 |
| B1 | DF | AA61LW | 5.98 | 0.016 | 0.399 | 1.50% | 3 | 5 | 0.9242 | 10.0, 7.69, 5.92, 4.55, 3.50, 2.69, 2.07, 1.59 | 1.3 | YES | | | SLS-B5 |
| B2 | DF | AA61LW | 5.69 | 0.015 | 0.318 | 4.32% | 4 | 4 | 0.9350 | 20.0, 14.3, 10.2, 7.29, 5.21, 3.72, 2.66, 1.90 | 1.4 | YES | | | SLS-B13 |
| B3 | DF | AA61LW | NA | NA | NA | NA | NA | NA | NA | NA | NA | NO | PC failed | | SLS-B14 |
| B4 | DF | AA61LW | 4.73 | 0.013 | 0.358 | 6.35% | 3 | 4 | 0.9252 | 20.0, 14.3, 10.2, 7.29, 5.21, 3.72, 2.66, 1.90 | 1.4 | YES | | | SLS-B15 |
| ***ECBC*** | | | | | | | | | | | | | | | |
| AA61JC-A1 | RF | AA61JC | 3.45 | 0.009 | 0.346 | 9.78% | 2 | 5 | 0.9328 | 100, 10, 1, 0.1, 0.01, 0.001, 0.0001, 0.00001 | 10 | RF | range finder | ppt in 2X C1 and 1X C1 | SLS-P14 |
| AA61JC-B1 | DF | AA61JC | 5.01 | 0.013 | 0.454 | 8.40% | 3 | 4 | 0.9612 | 20.0, 13.6, 9.26, 6.30, 4.28, 2.91, 1.98, 1.35 | 1.47 | YES | | | SLS-P38 |
| AA61JC-B2 | DF | AA61JC | 4.89 | 0.013 | 0.320 | 12.12% | 4 | 4 | 0.8878 | 20.0, 13.6, 9.26, 6.30, 4.28, 2.91, 1.98, 1.35 | 1.47 | YES | | | SLS-P39 |
| AA61JC-B3 | DF | AA61JC | 6.07 | 0.016 | 0.433 | 1.12% | 2 | 5 | 0.9620 | 20.0, 13.6, 9.26, 6.30, 4.28, 2.91, 1.98, 1.35 | 1.47 | YES | | | SLS-P42 |
| ***FRAME*** | | | | | | | | | | | | | | | |
| FAL.3T3.PM.A1.10.09.04 | RF | AA61PM | NA | NA | 0.373 | 3.11% | 0 | 1 | 0.0000 | 100, 10, 1.0, 0.1, 0.01, 0.001, 0.0001, 0.00001 | 10 | RF | range finder; no points between 0 -- 50% | ppt in 1X C1 | FAL.3T3.SLS.10.09.04 |
| FAL.3T3.PM.B1.16.09.04 | DF | AA61PM | NA | NA | 0.269 | 3.91% | 0 | 0 | 0.0000 | 250, 170, 116, 78.7, 53.5, 36.4, 24.8, 16.9 | 1.47 | NO | no points between 50 - 100% | ppt in 2X C1 | FAL.3T3.SLS.16.09.04 |
| FAL.3T3.PM.B2.23.09.04 | DF | AA61PM | 10.1 | 0.027 | 0.199 | 6.98% | 1 | 0 | 0.8164 | 25.0, 11.6, 5.4, 2.5, 1.2, 0.544, 0.253, 0.118 | 2.15 | NO | no points between 50 - 100% | ppt in 2X C1 | FAL.3T3.SLS.23.09.04 |
| FAL.3T3.PM.B3.14.10.04 | DF | AA61PM | 8.75 | 0.023 | 0.232 | 1.04% | 2 | 2 | 0.9504 | 25.0, 17.0, 11.6, 7.87, 5.35, 3.64, 2.48, 1.69 | 1.47 | YES | | ppt in 2X C1 | FAL.3T3.SLS.14.10.04 |
| FAL.3T3.PM.B4.21.10.04 | DF | AA61PM | 7.60 | 0.020 | 0.251 | 12.27% | 3 | 1 | 0.9286 | 25.0, 17.0, 11.6, 7.87, 5.35, 3.64, 2.48, 1.69 | 1.47 | YES | | ppt in 2X C1 | FAL.3T3.SLS.21.10.04 |
| FAL.3T3.PM.B5.04.11.04 | DF | AA61PM | 7.63 | 0.020 | 0.190 | 12.15% | 3 | 3 | 0.9797 | 25.0, 17.0, 11.6, 7.87, 5.35, 3.64, 2.48, 1.69 | 1.47 | YES | | outlier removed bySD | FAL.3T3.SLS.04.11.04 |
| **HEXACHLOROPHENE** | | | | | | | | | | | | | | | |
| ***IIVS*** | | | | | | | | | | | | | | | |
| A1 | RF | AA61JN | 3.21 | 0.008 | 0.353 | 1.04% | 1 | 2 | 0.9799 | 1000, 100, 10, 1, 0.1, 0.01, 0.001, 0.0001 | 10 | RF | range finder | ppt in 2X C1 | SLS-A1 |
| B1 | DF | AA61JN | 2.90 | 0.01 | 0.440 | 0.93% | 5 | 3 | 0.9582 | 20.0, 12.5, 7.81, 4.88, 3.05, 1.91, 1.19, 0.745 | 1.6 | YES | | | SLS-B5 |
| B2 | DF | AA61JN | 3.39 | 0.01 | 0.367 | 0.61% | 4 | 4 | 0.9595 | 20.0, 12.5, 7.81, 4.88, 3.05, 1.91, 1.19, 0.745 | 1.6 | YES | | | SLS-B9 |
| B3 | DF | AA61JN | 2.88 | 0.01 | 0.341 | 3.03% | 5 | 3 | 0.9868 | 20.0, 12.5, 7.81, 4.88, 3.05, 1.91, 1.19, 0.745 | 1.6 | YES | | | SLS-B10 |
| ***ECBC*** | | | | | | | | | | | | | | | |
| AA61ND-A1 | RF | AA61ND | 9.47 | 0.023 | 0.329 | 9.12% | 2 | 2 | 0.9700 | 1000, 100,10, 1, 0.1, 0.01, 0.001, 0.0001 | 10 | RF | range finder | ppt in 2X C1-C2 and ppt in 1X C1 | SLS-P4 |
| AA61ND-B1 | DF | AA61ND | 7.81 | 0.019 | 0.293 | 3.27% | 3 | 3 | 0.9653 | 100, 46.5, 21.6, 10.1, 4.68, 2.18, 1.01, 0.47 | 2.15 | YES | | | SLS-P18 |
| AA61ND-B2 | DF | AA61ND | 3.70 | 0.009 | 0.426 | 9.89% | 3 | 3 | 0.9878 | 100, 46.5, 21.6, 10.1, 4.68, 2.18, 1.01, 0.47 | 2.15 | YES | | | SLS-P20 |
| AA61ND-B3 | DF | AA61ND | 3.56 | 0.009 | 0.371 | 3.77% | 5 | 3 | 0.9882 | 100, 46.5, 21.6, 10.1, 4.68, 2.18, 1.01, 0.47 | 2.15 | YES | | | SLS-P21 |
| ***FRAME*** | | | | | | | | | | | | | | | |

# 3T3 NRU Reference Substance Data

| Experiment ID 3T3 Cells | Assay Type[1] | Substance ID | $IC_{50}$ (ug/mL) | $IC_{50}$ (mM) | Mean VC OD[2] | Difference of right/left VC from mean VC[3] | Number of Points 0 - 50 %[4] | Number of Points 50 - 100 %[5] | $R^2$ [6] | Exposure Concentrations (ug/mL)[7] | Dilution Factor[8] | Acceptable Tests[9] | Rationale for Unacceptability | Notes | PC ID |
|---|---|---|---|---|---|---|---|---|---|---|---|---|---|---|---|
| FAL.3T3.HB.A1.09/01/04 | RF | AA61HB | 9.80 | 0.024 | 0.387 | 8.80% | 1 | 4 | 0.9858 | 1000, 100, 10, 1, 0.1, 0.01, 0.001, 0.0001 | 10 | RF | range finder | did'nt dissolve properly; top 2 conc. prepared from stock & C2 from C1. C3 prepared by diluting stock and C4-8 from the respective C3-7 (from SD); ppt at 100 ug/mL. | FAL.3T3.SLS.09/01/04 |
| FAL.3T3.HB.B1.16.01.04 | DF | AA61 HB | 7.35 | 0.018 | 0.558 | 6.11% | 4 | 3 | 0.9833 | 100, 47.0, 22.0, 10.0, 4.68, 2.18, 1.01, 0.47 | 2.15 | YES | | | FAL.3T3.SLS.16/01/04 |
| FAL.3T3.HB.B2.23.01.04 | DF | AA61HB | 4.59 | 0.011 | 0.393 | 5.57% | 3 | 3 | 0.8846 | 100, 46.5, 21.6, 10.1, 4.68, 2.18, 1.01, 0.47 | 2.15 | YES | | | FAL3T3.23-01-04 |
| FAL.3T3.HB.B3.30.01.04 | DF | AA61HB | NA | NA | 0.264 | 12.04% | 2 | 6 | NA | 100, 47.0, 22.0, 10.0, 4.68, 2.18, 1.01, 0.47 | 2.15 | NO | SD rejects this experiment | serious NR crystal problem; SD rejects this experiment | FAL.3T3.SLS.29/01/04 |
| FAL.3T3.HB.B4.06-02-04 | DF | AA61HB | 4.10 | 0.010 | 0.455 | 3.82% | 5 | 3 | 0.9631 | 100, 47.0, 22.0, 10.0, 4.68, 2.18, 1.01, 0.47 | 2.15 | YES | | possible NR crystals present; blanks slightly higher than usual | FAL.3T3.SLS.06/02/04 |
| **LACTIC ACID** | | | | | | | | | | | | | | | |
| ***IIVS*** | | | | | | | | | | | | | | | |
| A1 | RF | AA61FW | 1710 | 18.940 | 0.443 | 13.41% | 1 | 2 | 0.8766 | 10000, 1000, 100, 10, 1, 0.1, 0.01, 0.001 | 10 | RF | range finder | | SLS-A2 |
| B1 | DF | AA61FW | 3020 | 33.525 | 0.447 | 0.32% | 1 | 2 | 0.9050 | 10000, 6667, 4444, 2963, 1975, 1317, 878, 585 | 1.5 | YES | | plate sealer used | SLS-B4 |
| B2 | DF | AA61FW | 3210 | 35.594 | 0.371 | 3.03% | 0 | 5 | 0.9595 | 10000, 6667, 4444, 2963, 1975, 1317, 878, 585 | 1.5 | NO | no points between 0-50% | | SLS-B7 |
| B3 | DF | AA61FW | 2770 | 30.787 | 0.422 | 6.41% | 0 | 5 | 0.9166 | 10000, 6667, 4444, 2963, 1975, 1317, 878, 585 | 1.5 | NO | no points between 0-50% | | SLS-B8 |
| B4 | DF | AA61FW | 2840 | 31.577 | 0.494 | 1.43% | 2 | 5 | 0.8914 | 5000, 4167, 3472,2894,2411, 2009, 1674, 1395 | 1.2 | YES | | plates read 15-16 hr late; orignial reading used wrong OD wavelength | SLS-B11 |
| B5 | DF | AA61FW | 2510 | 27.821 | 0.349 | 3.18% | 2 | 5 | 0.8772 | 5000, 4167, 3472,2894,2411, 2009, 1674, 1395 | 1.2 | YES | | outliers removed bySD | SLS-B12 |
| ***ECBC*** | | | | | | | | | | | | | | | |
| AA61NL-A1 | RF | AA61NL | 1890 | 20.959 | 0.260 | 14.18% | 1 | 1 | 0.8301 | 10000,1000, 100, 10, 1,0.1, 0.01, 0.001 | 10 | RF | range finder | ppt in 1X C1 | SLS-P5 |
| AA61NL-B1 | DF | AA61NL | 2630 | 29.199 | 0.587 | 4.77% | 3 | 5 | 0.9427 | 10000, 6803, 4628, 3148, 2142, 1457, 991, 674 | 1.47 | YES | | | SLS-P26 |
| AA61NL-B2 | DF | AA61NL | 2940 | 32.687 | 0.526 | 1.28% | 3 | 5 | 0.9463 | 10000, 6803, 4628, 3148, 2142, 1457, 991, 674 | 1.47 | YES | | | SLS-P27 |
| AA61NL-B3 | DF | AA61NL | 3260 | 36.172 | 0.441 | 1.38% | 3 | 4 | 0.9660 | 10000, 6803, 4628, 3148, 2142, 1457, 991, 674 | 1.47 | YES | | | SLS-P29 |
| ***FRAME*** | | | | | | | | | | | | | | | |
| FAL.3T3.JT.A1.01/04/04 | RF | AA61JT | 5750 | 63.881 | 0.314 | 3.27% | 1 | 0 | 0.7232 | 10000, 1000, 100, 10, 1, 0.1, 0.01, 0.001 | 10 | RF | range finder | | FAL.3T3.SLS.01/04/04 |
| FAL.3T3.JT.B1.29/04/04 | DF | AA61JT | 3000 | 33.294 | 0.315 | 0.03% | 2 | 2 | 0.9638 | 10000, 4651, 2163, 1006, 468, 218, 101, 47.1 | 2.15 | YES | | NR crystals; high background | FAL.3T3.SLS.29/04/04 |
| FAL.3T3.JT.B2.07/05/04 | DF | AA61JT | 3590 | 39.845 | 0.361 | 17.30% | 4 | 2 | 0.9759 | 10000, 7519, 5653, 4251, 3196, 2403, 1807, 1358 | 1.33 | NO | %VC difference > 15 | possible volatility problem | FAL.3T3.SLS.07/05/04 |
| FAL.3T3.JT.B3.20/05/04 | DF | AA61JT | 4100 | 45.538 | 0.377 | 2.39% | 4 | 1 | 0.9730 | 10000, 7519, 5653, 4251, 3196, 2403, 1807, 1358 | 1.33 | YES | | | FAL.3T3.SLS.20/05/04 |

# 3T3 NRU Reference Substance Data

| Experiment ID 3T3 Cells | Assay Type[1] | Substance ID | $IC_{50}$ (ug/mL) | $IC_{50}$ (mM) | Mean VC OD[2] | Difference of right/left VC from mean VC[3] | Number of Points 0 - 50 %[4] | Number of Points 50 - 100 %[5] | $R^2$ [6] | Exposure Concentrations (ug/mL)[7] | Dilution Factor[8] | Acceptable Tests[9] | Rationale for Unacceptability | Notes | PC ID |
|---|---|---|---|---|---|---|---|---|---|---|---|---|---|---|---|
| FAL.3T3.JT.B4.27/05/04 | DF | AA61JT | 3360 | 37.271 | 0.363 | 1.72% | 4 | 4 | 0.8950 | 10000, 7519, 5653, 4251, 3196, 2403, 1807, 1358 | 1.33 | YES | | | FAL.3T3.SLS.27/05/04 |
| **LINDANE** | | | | | | | | | | | | | | | |
| ***IIVS*** | | | | | | | | | | | | | | | |
| A1 | RF | AA61PJ | 15.9 | 0.055 | 0.403 | 35.64% | 1 | 7 | 0.9488 | 100, 10, 1, 0.1, 0.01, 0.001, 0.0001, 0.00001 | 10 | RF | range finder | VC1 ODs < VC2 ODs; VC1 removed from subsequent analysis; ppt in 2X C1; volatility issues. | SLS-A3 |
| B1 | DF | AA61PJ | 39.0 | 0.134 | 0.403 | 5.91% | 2 | 4 | 0.9245 | 100, 55.6, 30.9, 17.1, 9.53, 5.29, 2.94, 1.63 | 1.8 | YES | | ppt in 2X C1-C2; plate sealer used | SLS-B5 |
| B2 | DF | AA61PJ | 51.2 | 0.176 | 0.244 | 10.19% | 3 | 4 | 0.9211 | 500, 278, 154, 85.7, 47.6, 26.5, 14.7, 8.17 | 1.8 | YES | | SD removed C1 from Hill function due to upswing in response curve; C1 toxicity< C2-C4; plate sealer used; ppt in 2X C1-C4 | SLS-B13 |
| B3 | DF | AA61PJ | NA | NA | NA | NA | NA | NA | NA | NA | NA | NO | PC failed | | SLS-B14 |
| B4 | DF | AA61PJ | 35.2 | 0.121 | 0.239 | 1.50% | 4 | 3 | 0.9526 | 500, 278, 154, 85.7, 47.6, 26.5, 14.7, 8.17 | 1.8 | YES | | ppt in 2X C1-C5; ppt in 1X C1-C3 | SLS-B15 |
| B5 | DF | AA61PJ | 288 | 0.989 | 0.251 | 0.40% | 1 | 5 | 0.8492 | 500, 278, 154, 85.7, 47.6, 26.5, 14.7, 8.17 | 1.8 | YES | | ppt in 2X C1-C3 | SLS-B16 |
| B6 | DF | AA61PJ | 38.8 | 0.133 | 0.324 | 4.98% | 4 | 3 | 0.8974 | 500, 278, 154, 85.7, 47.6, 26.5, 14.7, 8.17 | 1.8 | YES | | ppt in 2X C1-C6 | SLS-18 |
| ***ECBC*** | | | | | | | | | | | | | | | |
| AA61FK-A1 | RF | AA61FK | 38.9 | 0.134 | 0.191 | 14.03% | 2 | 6 | 0.9093 | 1000, 100, 10, 1, 0.1, 0.01, 0.001, 0.0001 | 10 | RF | range finder | ppt in 2X C1-C2; ppt in 1X C1; higher than usual blank OD | SLS-P10 |
| AA61FK-B1 | DF | AA61FK | 42.9 | 0.147 | 0.242 | 3.72% | 3 | 5 | 0.9082 | 500, 233, 108, 50.3, 23.4, 10.9, 5.06, 2.35 | 2.15 | YES | | ppt in 2X C1-C3; ppt in 1X C1-C2 | SLS-P65 |
| AA61FK-B2 | DF | AA61FK | 262 | 0.902 | 0.340 | 0.96% | 2 | 6 | 0.8636 | 500, 233, 108, 50.3, 23.4, 10.9, 5.06, 2.35 | 2.15 | YES | | ppt in 2X C1-C3; ppt in 1X C1 | SLS-P66 |
| AA61FK-B3 | DF | AA61FK | 71.0 | 0.244 | 0.240 | 5.46% | 3 | 4 | 0.8190 | 500, 233, 108, 50.3, 23.4, 10.9, 5.06, 2.35 | 2.15 | YES | | ppt in 2X C1-C3; ppt in 1X C1-C3; SD removed data for C1 from PRISM analysis | SLS-P69 |
| ***FRAME*** | | | | | | | | | | | | | | | |
| FAL.3T3.KN.A1.27/05/04 | RF | AA61KN | 37.1 | 0.127 | 0.252 | 24.49% | 2 | 2 | 0.7351 | 1000, 100, 10, 1, 0.1, 0.01, 0.001, 0.0001 | 10 | RF | range finder; % VC difference > 15 | ppt in 1X C1; volatility proble | FAL.3T3.SLS.27/05/04 |
| FAL.3T3.KN.B1.04/06/04 | DF | AA61KN | 125 | 0.431 | 0.363 | 11.01% | 3 | 5 | 0.7052 | 2500, 791, 250, 79.2, 25.1, 7.9, 2.5, 0.8 | 3.16 | YES | | odd graph; ppt in 2X C1-C4 and ppt in 1X C1 | FAL.3T3.SLS.04.06.04 |
| FAL.3T3.KN.B2.18/06/04 | DF | AA61KN | 45.5 | 0.156 | 0.404 | 11.01% | 4 | 0 | 0.8725 | 1500, 475, 150, 47.5, 15.0, 4.76, 1.51, 0.48 | 3.16 | NO | no points between 50 - 100% | ppt in 1X C1-C3 and 2X C1-C2 | FAL.3T3.SLS.18.06.04 |
| FAL.3T3.KN.B3.24.06.04 | DF | AA61KN | 153 | 0.528 | 0.355 | 17.86% | 3 | 1 | 0.9198 | 1000, 465, 216, 101, 46.8, 21.8, 10.1, 4.7 | 2.15 | NO | % VC difference > 15 | volatility problem; ppt in 2X C1-C3 | FAL.3T3.SLS.24.06.04 |
| FAL.3T3.KN.B4.08.07.04 | DF | AA61KN | 308 | 1.060 | 0.250 | 11.89% | 1 | 7 | 0.7219 | 500, 340, 231, 157, 107, 72.8, 49.6, 33.7 | 1.47 | YES | | ppt in 2X C1-C3 and ppt in 1X C1-C3 | FAL.3T3.SLS.08.07.04 |
| FAL.3T3.KN.B5.09.07.04 | DF | AA61KN | 303 | 1.041 | 0.333 | 4.48% | 2 | 6 | 0.7443 | 500, 340, 231, 157, 107, 72.8, 49.6, 33.7 | 1.47 | YES | | ppt in 2X C1-C5 and ppt in 1X C1-C3 | FAL.3T3.SLS.09.07.04 |
| FAL.3T3.KN.B6.16.07.04 | DF | AA61KN | 329 | 1.131 | 0.238 | 6.21% | 2 | 3 | 0.9111 | 500, 340, 231, 157, 107, 72.8, 49.6, 33.7 | 1.47 | YES | | ppt in 2X C1-C4 and ppt in 1X C1-C2 | FAL.3T3.SLS.16.07.04 |
| **LITHIUM I CARBONATE** | | | | | | | | | | | | | | | |
| ***IIVS*** | | | | | | | | | | | | | | | |
| A1 | RF | AA61RN | 625 | 8.459 | 0.557 | 5.35% | 0 | 2 | -0.1197 | 100, 10, 1, 0.1, 0.01, 0.001, 0.0001, 0.00001 | 10 | RF | range finder | | SLS-A1 |
| B1 | DF | AA61RN | 877 | 11.869 | 0.378 | 2.23% | 0 | 6 | 0.1322 | 300, 214, 153, 109, 78.1,55.8, 39.8, 28.5 | 1.4 | NO | no points between 0.1 - 50%; low r2 | | SLS-B1 |

# 3T3 NRU Reference Substance Data

| Experiment ID 3T3 Cells | Assay Type[1] | Substance ID | $IC_{50}$ (ug/mL) | $IC_{50}$ (mM) | Mean VC OD[2] | Difference of right/left VC from mean VC[3] | Number of Points 0 - 50 %[4] | Number of Points 50 - 100 %[5] | $R^2$ [6] | Exposure Concentrations (ug/mL)[7] | Dilution Factor[8] | Acceptable Tests[9] | Rationale for Unacceptability | Notes | PC ID |
|---|---|---|---|---|---|---|---|---|---|---|---|---|---|---|---|
| B2 | DF | AA61RN | NA | NA | 0.499 | 7.37% | 0 | 4 | 0.2402 | 300, 214, 153, 109, 78.1,55.8, 39.8, 28.5 | 1.4 | NO | No points between 0.1 - 50%; low r2 | | SLS-B2 |
| B3 | DF | AA61RN | 2.74 | 0.037 | 0.573 | 2.02% | 0 | 3 | -0.0036 | 300, 214, 153, 109, 78.1,55.8, 39.8, 28.5 | 1.4 | NO | no points 0.1- 50%; PC failed | | SLS-B3 |
| B4 | DF | AA61RN | NA | NA | 0.500 | 8.09% | 0 | 5 | NA | 300, 214, 153, 109, 78.1,55.8, 39.8, 28.5 | 1.4 | NO | no points between 0.1 - 50%; low r2 | | SLS-B4 |
| ***ECBC*** | | | | | | | | | | | | | | | |
| AA61RR-A1 | RF | AA61RR | NA | NA | 0.363 | 7.10% | 0 | 0 | 0.2245 | 100, 10, 1.0, 0.1, 0.01, 0.001, 0.0001, 0.00001 | 10 | RF | no points between 10 - 90%; low r2; range finder | | SLS-P1 |
| AA61RR-A2 | RF | AA61RR | 561 | 7.592 | 0.387 | 11.51% | 0 | 3 | 0.2234 | 500, 50, 5.0, 0.5, 0.05, 0.005, 0.0005 | 10 | NO | no points between 10 - 50%; low r2; range finder | | SLS-P3 |
| AA61RR-B1 | DF | AA61RR | 656 | 8.878 | 0.574 | 2.50% | 1 | 5 | 0.7540 | 750, 510.2, 347.1, 236.1, 160.6, 109.3, 74.3, 50.6 | 1.47 | NO | low r2 | cloudy stock solution | SLS-P6 |
| AA61RR-B2 | DF | AA61RR | 762 | 10.313 | 0.568 | 2.56% | 1 | 5 | 0.7590 | 750, 510.2, 347.1, 236.1, 160.6, 109.3, 74.3, 50.6 | 1.47 | NO | low r2 | | SLS-P8 |
| AA61RR-B3 | DF | AA61RR | 574 | 7.768 | 0.545 | 0.11% | 2 | 6 | 0.8864 | 1102.5, 750, 510.2, 347.1, 236.1, 160.6, 109.3, 74.3 | 1.47 | YES | | | SLS-P10 |
| AA61RR-B4 | DF | AA61RR | 630 | 8.526 | 0.608 | 3.32% | 2 | 4 | 0.9561 | 1102.5, 750, 510.2, 347.1, 236.1, 160.6, 109.3, 74.3 | 1.47 | YES | | ppts. In C1-C3 | SLS-P15 |
| AA61RR-B5 | DF | AA61RR | 498 | 6.740 | 0.195 | 1.42% | 2 | 5 | 0.9176 | 1102.5, 750, 510.2, 347.1, 236.1, 160.6, 109.3, 74.3 | 1.47 | YES | | ppts. In C1-C3 | SLS-P16 |
| ***FRAME*** | | | | | | | | | | | | | | | |
| FAL.3T3.A1.RM.200603 | RF | AA61RM | 28200 | 381.648 | 0.729 | 6.72% | 0 | 0 | 0.2031 | 100, 10, 1.0, 0.1, 0.01, 0.001, 0.0001, 0.00001 | 10 | RF | no points between 10 - 90%; low r2; range finder | | FAL.3T3.SLS2.A1.200603 |
| FAL.3T3.RM.B1.04.07.03 | DF | AA61RM | 0.002 | 0.000 | 0.509 | 0.53% | 0 | 0 | -0.3160 | 250, 170, 115.7, 78.7, 53.5, 36.4, 24.8, 16.9 | 1.47 | NO | PC failed; no points between 10 - 90% | straight cytotoxicity line; can't perform proper calculations | FAL.3T3.SLS.04.07.03 |
| FAL.3T3.B2.RM.11.07.03 | DF | AA61RM | NA | NA | 0.490 | 2.31% | 0 | 0 | NA | 250, 170, 115.7, 78.7, 53.5, 36.4, 24.8, 16.9 | 1.47 | NO | PC failed; no points between 10 - 90% | | FAL.3T3.SLS.11.07.03 |
| FAL.3T3.B3.RM.18.07.03 | DF | AA61RM | NA | NA | 0.517 | 2.17% | 0 | 0 | NA | 250, 170, 115.7, 78.7, 53.5, 36.4, 24.8, 16.9 | 1.47 | NO | no points between 10 - 90%; No toxicity | | FAL.3T3.SLS.18.07.03 |
| FAL.3T3.RM.B4.070803 | DF | AA61RM | 24.7 | 0.334 | 0.738 | 5.09% | 0 | 8 | 0.6965 | 1000, 680, 462, 314, 214, 145, 99.1, 67.4 | 1.47 | NO | PC failed; no points between 0 & 50% viability; cytotoxicity curve goes in opposite direction | | FAL.3T3.SLS.070803 |
| FAL.3T3.RM.B5.080803 | DF | AA61RM | 1190 | 16.105 | 0.474 | 18.96% | 1 | 7 | 0.2883 | 1000, 680, 462, 314, 214, 145, 99.1, 67.4 | 1.47 | NO | PC failed; low r2; % VC difference > 15 | | FAL.3T3.SLS.080803 |

## MEPROBAMATE

| | | | | | | | | | | | | | | | |
|---|---|---|---|---|---|---|---|---|---|---|---|---|---|---|---|
| ***IIVS*** | | | | | | | | | | | | | | | |
| A1 | RF | AA61LS | 390 | 1.786 | 0.329 | 5.97% | 1 | 7 | 0.9290 | 1000, 100, 10, 1, 0.1, 0.01, 0.001, 0.0001 | 10 | RF | range finder | | SLS-A1 |
| B1 | DF | AA61LS | 395 | 1.811 | 0.544 | 1.09% | 3 | 5 | 0.9490 | 2000, 1111, 617, 343, 191, 106, 58.8, 32.7 | 1.8 | YES | | ppt in 2X C1 | SLS-B5 |
| B2 | DF | AA61LS | 385 | 1.762 | 0.367 | 1.27% | 3 | 5 | 0.9715 | 2000, 1111, 617, 343, 191, 106, 58.8, 32.7 | 1.8 | YES | | | SLS-B9 |
| B3 | DF | AA61LS | 377 | 1.726 | 0.381 | 5.07% | 3 | 5 | 0.9719 | 2000, 1111, 617, 343, 191, 106, 58.8, 32.7 | 1.8 | YES | | | SLS-B10 |
| ***ECBC*** | | | | | | | | | | | | | | | |

# 3T3 NRU Reference Substance Data

| Experiment ID 3T3 Cells | Assay Type[1] | Substance ID | $IC_{50}$ (ug/mL) | $IC_{50}$ (mM) | Mean VC OD[2] | Difference of right/left VC from mean VC[3] | Number of Points 0 - 50 %[4] | Number of Points 50 - 100 %[5] | $R^2$ [6] | Exposure Concentrations (ug/mL)[7] | Dilution Factor[8] | Acceptable Tests[9] | Rationale for Unacceptability | Notes | PC ID |
|---|---|---|---|---|---|---|---|---|---|---|---|---|---|---|---|
| AA61RJ-A1 | RF | AA61RJ | 283 | 1.297 | 0.266 | 3.58% | 1 | 5 | 0.8633 | 1000, 100,10, 1, 0.1, 0.01, 0.001, 0.0001 | 10 | RF | range finder | | SLS-P2 |
| AA61RJ-B1 | DF | AA61RJ | 309 | 1.416 | 0.336 | 9.11% | 2 | 6 | 0.8967 | 2000, 930, 433, 201, 93.6, 43.5, 20.2, 9.4 | 2.15 | YES | | | SLS-P6 |
| AA61RJ-B2 | DF | AA61RJ | 344 | 1.577 | 0.285 | 3.34% | 3 | 4 | 0.9449 | 2000, 930, 433, 201, 93.6, 43.5, 20.2, 9.4 | 2.15 | YES | | | SLS-P8 |
| AA61RJ-B3 | DF | AA61RJ | 407 | 1.866 | 0.345 | 0.70% | 3 | 5 | 0.8884 | 2000, 930, 433, 201, 93.6, 43.5, 20.2, 9.4 | 2.15 | YES | | outlier not removed from from C6 | SLS-P18 |
| ***FRAME*** | | | | | | | | | | | | | | | |
| FAL.3T3.HV.A1.080104 | RF | AA61HV | 798 | 3.655 | 0.505 | 5.60% | 1 | 1 | 0.8944 | 1000, 100, 10, 1, 0.1, 0.01, 0.001, 0.0001 | 10 | RF | range finder | | FAL.3T3.SLS.080104 |
| FAL3T3.HV.A2.15-01-04 | DF | AA61HV | 1030 | 4.720 | 0.526 | 6.07% | 2 | 6 | 0.9564 | 2500, 1163, 541, 252, 117, 54.4, 25.3, 11.8 | 2.15 | NO | PC failed; | | FAL.3T3.SLS.15/01/04 |
| FAL3T3.HV.B1.22-01-04 | DF | AA61HV | 984 | 4.508 | 0.311 | 13.54% | 2 | 5 | 0.7904 | 2500, 1163, 541, 252, 117, 54.4, 25.3, 11.8 | 2.15 | YES | | solubility a problem above 2500 ug/ml | FAL.3T3.SLS.22/01/04 |
| FAL3T3.HV.B2.29-01-04 | DF | AA61HV | 904 | 4.139 | 0.377 | 3.07% | 3 | 5 | 0.9632 | 2500, 1701, 1157, 787, 535, 364, 248, 169 | 1.47 | YES | | | FAL3T3.SLS.29-01-04 |
| FAL3T3.HV.B3.05.02.04 | DF | AA61HV | 80 | 0.366 | 0.341 | 11.28% | 8 | 0 | 0.5764 | 2500, 1701, 1157, 787, 535, 364, 248, 169 | 1.47 | NO | PC failed; no points between 50-100 | problem with reservoir liners | FAL.3T3.SLS.5/02/04 |
| FAL.3T3.HV.B4.25.02.04 | DF | AA61HV | 927 | 4.246 | 0.437 | 3.66% | 3 | 5 | 0.9673 | 2500, 1701, 1157, 787, 535, 364, 248, 169 | 1.47 | YES | | | FAL3T3.SLS.25.02.04 |
| FAL3T3.HV.B5.17.03.04 | DF | AA61HV | 692 | 3.169 | 0.378 | 0.13% | 4 | 4 | 0.9275 | 2500, 1701, 1157, 787, 535, 364, 248, 169 | 1.47 | YES | | | FAL.3T3.SLS.17/03/04 |

## MERCURY II CHLORIDE

| | | | | | | | | | | | | | | | |
|---|---|---|---|---|---|---|---|---|---|---|---|---|---|---|---|
| ***IIVS*** | | | | | | | | | | | | | | | |
| A1 | RF | AA61MX | 1.21 | 0.004 | 0.316 | 58.59% | 1 | 4 | 0.9661 | 1000, 100, 10, 1, 0.1, 0.01, 0.001, 0.0001 | 10 | RF | range finder | VC1 ODs < VC2 ODs; VC1 removed from subsequent analysis; volatility issues. | SLS-A1 |
| B1 | DF | AA61MX | 3.39 | 0.012 | 0.320 | 2.63% | 1 | 6 | 0.9147 | 10.0, 5.56, 3.09, 1.71, 0.953, 0.529, 0.294, 0.163 | 1.8 | YES | | | SLS-B1 |
| B2 | DF | AA61MX | 3.50 | 0.013 | 0.311 | 5.10% | 1 | 1 | 0.9564 | 10.0, 5.56, 3.09, 1.71, 0.953, 0.529, 0.294, 0.163 | 1.8 | YES | | | SLS-B2 |
| B3 | DF | AA61MX | 3.63 | 0.013 | 0.346 | 7.05% | 2 | 5 | 0.9477 | 10.0, 5.56, 3.09, 1.71, 0.953, 0.529, 0.294, 0.163 | 1.8 | YES | | | SLS-B3 |
| ***ECBC*** | | | | | | | | | | | | | | | |
| AA61KP-A1 | RF | AA61KP | NA | NA | 0.152 | 58.91% | 2 | 2 | 0.9275 | 1000, 100,10, 1, 0.1, 0.01, 0.001, 0.0001 | 10 | RF | range finder | low ODs for VC1; ppt in C1 | SLS-P2 |
| AA61KP-A2 | RF | AA61KP | 1.43 | 0.005 | 0.373 | 3.96% | 0 | 1 | 0.9241 | 10, 1, 0.1, 0.01, 0.001, 0.0001, 0.00001, 0.000001 | 10 | RF | range finder | | SLS-P4 |
| AA61KP-B1 | DF | AA61KP | 3.26 | 0.012 | 0.278 | 2.28% | 2 | 1 | 0.8937 | 10.0, 4.65, 2.16, 1.01, 0.47, 0.22, 0.10, 0.05 | 2.15 | YES | | | SLS-P18 |
| AA61KP-B2 | DF | AA61KP | 3.61 | 0.013 | 0.353 | 5.88% | 2 | 5 | 0.9465 | 10.0, 6.80, 4.63, 3.15, 2.14, 1.46, 0.99, 0.67 | 1.47 | YES | | | SLS-P20 |
| AA61KP-B3 | DF | AA61KP | 3.48 | 0.013 | 0.384 | 6.51% | 2 | 5 | 0.9682 | 10.0, 6.80, 4.63, 3.15, 2.14, 1.46, 0.99, 0.67 | 1.47 | YES | | | SLS-P21 |
| ***FRAME*** | | | | | | | | | | | | | | | |
| FAL.3T3.HA.A1.080104 | RF | AA61HA | 4.11 | 0.015 | 0.399 | 9.97% | 1 | 0 | 0.9558 | 1000, 100, 10, 1, 0.1, 0.01, 0.001, 0.0001 | 10 | RF | no points between 50-100 range finder | ppt in 1000ug/ml | FAL.3T3.SLS.080104 |
| FAL3T3.HA.A2.15-01-04 | DF | AA61HA | 6.77 | 0.025 | 0.363 | 6.52% | 2 | 6 | 0.8549 | 10.0, 7.7, 5.9, 4.6, 3.5, 2.7, 2.1, 1.6 | 1.3 | NO | PC failed; | | FAL.3T3.SLS.15/01/04 |
| FAL3T3.HA.B1.22-01-04 | DF | AA61HA | 5.71 | 0.021 | 0.371 | 3.49% | 1 | 6 | 0.8036 | 10.0, 7.7, 5.9, 4.6, 3.5, 2.7, 2.1, 1.6 | 1.3 | YES | | | FAL.3T3.SLS.22/01/04 |
| FAL3T3.HA.B2.29-01-04 | DF | AA61HA | 7.98 | 0.029 | 0.481 | 1.42% | 1 | 5 | 0.9674 | 10.0, 7.7, 5.9, 4.6, 3.5, 2.7, 2.1, 1.6 | 1.3 | YES | | | FAL3T3.SLS.29-01-04 |

# 3T3 NRU Reference Substance Data

| Experiment ID 3T3 Cells | Assay Type[1] | Substance ID | $IC_{50}$ (ug/mL) | $IC_{50}$ (mM) | Mean VC OD[2] | Difference of right/left VC from mean VC[3] | Number of Points 0 - 50 %[4] | Number of Points 50 - 100 %[5] | $R^2$ [6] | Exposure Concentrations (ug/mL)[7] | Dilution Factor[8] | Acceptable Tests[9] | Rationale for Unacceptability | Notes | PC ID |
|---|---|---|---|---|---|---|---|---|---|---|---|---|---|---|---|
| FAL3T3.HA.B3.05.02.04 | DF | AA61HA | 0.967 | 0.004 | 0.380 | 7.96% | 8 | 0 | 0.8305 | 10.0, 7.7, 5.9, 4.6, 3.5, 2.7, 2.1, 1.6 | 1.3 | NO | PC failed; no points between 50-100 | problem with reservoir liners | FAL.3T3.SLS.5/02/04 |
| FAL3T3.HA.B4.17.03.04 | DF | AA61HA | 4.28 | 0.016 | 0.223 | 2.28% | 3 | 5 | 0.9519 | 10, 7.63, 5.83, 4.45, 3.40, 2.59, 1.98, 1.51 | 1.31 | YES | | | FAL.3T3.SLS.17/03/04 |
| **METHANOL** | | | | | | | | | | | | | | | |
| ***IIVS*** | | | | | | | | | | | | | | | |
| A1 | RF | AA61FZ | NA | NA | 0.256 | 7.10% | 0 | 6 | NA | 1000, 100, 10, 1, 0.1, 0.01, 0.001, 0.0001 | 10 | RF | range finder | | SLS-A5 |
| B1 | DF | AA61FZ | NA | NA | 0.380 | 5.76% | 0 | 2 | 0.4933 | 2500, 1923, 1479, 1138, 875, 673, 518, 398 | 1.3 | NO | no points between 0 - 50% | | SLS-B9 |
| B2 | DF | AA61FZ | NA | NA | 0.284 | 2.14% | 0 | 1 | NA | 2500, 1923, 1479, 1138, 875, 673, 518, 398 | 1.3 | NO | no points between 0 - 50% | | SLS-B13 |
| B3 | DF | AA61FZ | NA | NA | NA | NA | NA | NA | NA | NA | NA | NO | PC failed | | SLS-B14 |
| B4 | DF | AA61FZ | NA | NA | 0.400 | 2.42% | 0 | 2 | NA | 2500, 1923, 1479, 1138, 875, 673, 518, 398 | 1.3 | NO | no points between 0 - 50% | | SLS-B15 |
| ***ECBC*** | | | | | | | | | | | | | | | |
| AA61MJ-A1 | RF | AA61MJ | NA | NA | 0.443 | 6.04% | 0 | 3 | NA | 1000, 100, 10, 1, 0.1, 0.01, 0.001, 0.0001 | 10 | RF | range finder | | SLS-16 |
| AA61MJ-B1 | DF | AA61MJ | NA | NA | 0.709 | 5.19% | 0 | 8 | NA | 3000, 2479, 2049, 1693, 1400, 1157, 956, 790 | 1.21 | NO | no points between 0 - 50% | no toxicity detected; need larger conc; dilut. factor 1.21 | SLS-P44 |
| AA61MJ-B2 | DF | AA61MJ | NA | NA | 0.512 | 2.61% | 0 | 7 | NA | 3500, 2893, 2391, 1976, 1633, 1349, 1115, 922 | 1.21 | NO | no points between 0 - 50% | no toxicity was detected | SLS-P72 |
| AA61MJ-B3 | DF | AA61MJ | NA | NA | 0.375 | 14.56% | 0 | 0 | NA | 3500, 2893, 2391, 1976, 1633, 1349, 1115, 922 | 1.21 | NO | no points between 0 - 100% | no toxicity was detected | SLS-P74 |
| ***FRAME*** | | | | | | | | | | | | | | | |
| FAL.3T3.RG.A1.21.10.04 | RF | AA61RG | NA | NA | 0.203 | 7.09% | 0 | 0 | NA | 1000, 100, 10, 1.0, 0.1, 0.01, 0.001, 0.0001 | 10 | RF | range finder; no points between 0-100% | | FAL.3T3.SLS.21.10.04 |
| FAL.3T3.RG.B1.04.11.04 | DF | AA61RG | NA | NA | 0.175 | 6.75% | 0 | 0 | NA | 2500, 1701, 1157, 787, 535, 264, 248, 169 | 1.47 | NO | no points between 0-100% | | FAL.3T3.SLS.04.11.04 |
| FAL.3T3.RG.B2.25.11.04 | DF | AA61RG | NA | 329085 | 0.258 | 0.36% | 0 | 0 | -1.2340 | 2500, 2066, 1708, 1411, 1166, 964, 797, 658 | 1.21 | NO | no points between 0-100% | | FAL.3T3.SLS.25.11.04 |
| FAL.3T3.RG.B3.26.11.04 | DF | AA61RG | NA | NA | 0.263 | 5.11% | 0 | 0 | NA | 2500, 2066, 1708, 1411, 1166, 964, 797, 658 | 1.21 | NO | no points between 0-100% | no toxicity detected; 1.21 dilut. factor doesn't affect acceptability; outlier removed bySD | FAL.3T3.SLS.26.11.04 |
| **NICOTINE** | | | | | | | | | | | | | | | |
| ***IIVS*** | | | | | | | | | | | | | | | |
| A1 | RF | AA61HL | 339 | 2.089 | 0.457 | 7.49% | 0 | 5 | 0.9490 | 10000, 1000, 100, 10, 1, 0.1, 0.01, 0.001 | 10 | RF | range finder | | SLS-A4 |
| B1 | DF | AA61HL | 422 | 2.600 | 0.539 | 5.98% | 1 | 2 | 0.9929 | 1000, 714, 510, 364, 260, 186, 133, 94.9 | 1.4 | YES | | | SLS-B4 |
| B2 | DF | AA61HL | 508 | 3.133 | 0.392 | 3.15% | 2 | 0 | 0.8900 | 1000, 714, 510, 364, 260, 186, 133, 94.9 | 1.4 | NO | no points between 50 - 100% | | SLS-B7 |
| B3 | DF | AA61HL | 513 | 3.162 | 0.469 | 2.05% | 2 | 1 | 0.9111 | 1000, 714, 510, 364, 260, 186, 133, 94.9 | 1.4 | YES | | | SLS-B8 |
| B4 | DF | AA61HL | 415 | 2.558 | 0.440 | 1.63% | 3 | 2 | 0.9953 | 1000, 833, 694, 579, 482, 402, 335, 279 | 1.2 | YES | | plates read 15-16 hr late; orignial reading used wrong OD wavelength | SLS-B11 |
| ***ECBC*** | | | | | | | | | | | | | | | |
| AA61NA-A1 | RF | AA61NA | NA | NA | 0.410 | 19.57% | 0 | 5 | NA | 10000,1000, 100, 10, 1,0.1, 0.01, 0.001 | 10 | RF | range finder | | SLS-P49 |
| AA61NA-B1 | DF | AA61NA | NA | NA | 0.532 | 3.40% | 3 | 5 | NA | 500, 413, 342, 282, 233, 193, 159, 132 | 1.21 | NO | PC failed | | SLS-P53 |
| AA61NA-B2 (sealer) | DF | AA61NA | 292 | 1.803 | 0.603 | 4.02% | 3 | 5 | 0.8541 | 500, 413, 342, 282, 233, 193, 159, 132 | 1.21 | YES | | | SLS-P54 |

# 3T3 NRU Reference Substance Data

| Experiment ID 3T3 Cells | Assay Type[1] | Substance ID | $IC_{50}$ (ug/mL) | $IC_{50}$ (mM) | Mean VC OD[2] | Difference of right/left VC from mean VC[3] | Number of Points 0 - 50 %[4] | Number of Points 50 - 100 %[5] | $R^2$ [6] | Exposure Concentrations (ug/mL)[7] | Dilution Factor[8] | Acceptable Tests[9] | Rationale for Unacceptability | Notes | PC ID |
|---|---|---|---|---|---|---|---|---|---|---|---|---|---|---|---|
| AA61NA-B3 (sealer) | DF | AA61NA | NA | NA | 0.399 | 9.58% | 4 | 4 | NA | 500, 413, 342, 282, 233, 193, 159, 132 | 1.21 | NO | PC failed | | SLS-P56 |
| AA61NA-B4 (sealer) | DF | AA61NA | 325 | 2.004 | 0.451 | 5.32% | 3 | 5 | 0.7971 | 500, 413, 342, 282, 233, 193, 159, 132 | 1.21 | YES | | | SLS-P58 |
| AA61NA-B5 (sealer) | DF | AA61NA | 199 | 1.227 | 0.536 | 5.08% | 5 | 3 | 0.8836 | 500, 413, 342, 282, 233, 193, 159, 132 | 1.21 | YES | | | SLS-P62 |
| ***FRAME*** | | | | | | | | | | | | | | | |
| FAL.3T3.KL.A1.10.09.04 | RF | AA61KL | 582 | 3.589 | 0.402 | 9.59% | 1 | 0 | 0.9633 | 10000, 1000, 100, 10, 1, 0.1, 0.01, 0.001 | 10 | RF | range finder; no points between 50 - 100% | | FAL.3T3.SLS.10.09.04 |
| FAL.3T3.KL.B1.16.09.04 | DF | AA61KL | 460 | 2.838 | 0.375 | 1.07% | 3 | 0 | 0.9720 | 1000, 680, 463, 315, 214, 146, 99.1, 67.4 | 1.47 | NO | no points between 50 - 100% | | FAL.3T3.SLS.16.09.04 |
| FAL.3T3.KL.B2.23.09.04 | DF | AA61KL | 481 | 2.964 | 0.356 | 3.30% | 4 | 2 | 0.9817 | 1000, 826, 683, 565, 467, 386, 319, 263 | 1.21 | YES | | outlier removed by SD | FAL.3T3.SLS.23.09.04 |
| FAL.3T3.KL.B3.14.10.04 | DF | AA61KL | 499 | 3.076 | 0.359 | 4.34% | 2 | 1 | 0.9323 | 1000, 826, 683, 565, 467, 386, 319, 263 | 1.21 | YES | | | FAL.3T3.SLS.14.10.04 |
| FAL.3T3.KL.B4.04.11.04 | DF | AA61KL | 255 | 1.574 | 0.227 | 6.96% | 6 | 2 | 0.9486 | 750, 620, 512, 423, 350, 289, 239, 197 | 1.21 | YES | | outlier removed by SD | FAL.3T3.SLS.04.11.04 |

## PARAQUAT

| | | | | | | | | | | | | | | | |
|---|---|---|---|---|---|---|---|---|---|---|---|---|---|---|---|
| ***IIVS*** | | | | | | | | | | | | | | | |
| A1 | RF | AA61GD | 14.1 | 0.055 | 0.454 | 0.61% | 1 | 1 | 0.9683 | 10000, 1000, 100, 10, 1, 0.1, 0.01, 0.001 | 10 | RF | range finder | | SLS-A2 |
| B1 | DF | AA61GD | 7.91 | 0.031 | 0.491 | 0.08% | 6 | 2 | 0.9744 | 86.8 ,54.3, 33.9, 21.2, 13.3, 8.28, 5.18, 3.24 | 1.6 | YES | | | SLS-B4 |
| B2 | DF | AA61GD | 22.7 | 0.088 | 0.386 | 6.81% | 3 | 5 | 0.9777 | 100, 62.5, 39.1, 24.4, 15.3, 9.54, 5.96, 3.73 | 1.6 | YES | | | SLS-B7 |
| B3 | DF | AA61GD | 39.4 | 0.153 | 0.478 | 2.70% | 2 | 6 | 0.9759 | 100, 62.5, 39.1, 24.4, 15.3, 9.54, 5.96, 3.73 | 1.6 | YES | | | SLS-B8 |
| ***ECBC*** | | | | | | | | | | | | | | | |
| AA61MP-A1 | RF | AA61MP | 11.9 | 0.046 | 0.345 | 1.23% | 1 | 1 | 0.9870 | 10000,1000, 100, 10, 1,0.1, 0.01, 0.001 | 10 | RF | range finder | | SLS-P5 |
| AA61MP-B1 | DF | AA61MP | 23.6 | 0.092 | 0.654 | 5.58% | 2 | 5 | 0.9673 | 100, 46.5, 21.6, 10.1, 4.68, 2.18, 1.01, 0.47 | 2.15 | YES | | | SLS-P23 |
| AA61MP-B2 | DF | AA61MP | 13.1 | 0.051 | 0.632 | 7.30% | 3 | 5 | 0.9128 | 100, 46.5, 21.6, 10.1, 4.68, 2.18, 1.01, 0.47 | 2.15 | YES | | | SLS-P26 |
| AA61MP-B3 | DF | AA61MP | 27.1 | 0.105 | 0.622 | 7.05% | 2 | 5 | 0.9779 | 100, 46.5, 21.6, 10.1, 4.68, 2.18, 1.01, 0.47 | 2.15 | YES | | | SLS-P27 |
| ***FRAME*** | | | | | | | | | | | | | | | |
| FAL.3T3.HP.A1.01/04/04 | RF | AA61HP | 62.4 | 0.243 | 0.396 | 1.11% | 3 | 0 | 0.8909 | 10000, 1000, 100, 10, 1, 0.1, 0.01, 0.001 | 10 | RF | range finder | | FAL.3T3.SLS.01/04/04 |
| FAL.3T3.HP.B1.29/04/04 | DF | AA61HP | 39.8 | 0.155 | 0.275 | 10.84% | 1 | 0 | 0.8164 | 100, 46.5, 21.6, 10.1, 4.68, 2.18, 1.01, 0.47 | 2.15 | NO | no points between 50 - 100% | NR crystals; high background | FAL.3T3.SLS.29/04/04 |
| FAL.3T3.HP.B2.07/05/04 | DF | AA61HP | 7.35 | 0.029 | 0.347 | 7.92% | 4 | 2 | 0.9791 | 100, 46.5, 21.6, 10.1, 4.68, 2.18, 1.01, 0.47 | 2.15 | YES | | | FAL.3T3.SLS.07/05/04 |
| FAL.3T3.HP.B3.20/05/04 | DF | AA61HP | 40.2 | 0.156 | 0.360 | 0.93% | 4 | 1 | 0.9192 | 100, 75.2, 56.5, 42.5, 32.0, 24.0, 18.1, 13.6 | 1.33 | YES | | | FAL.3T3.SLS.20/05/04 |
| FAL.3T3.HP.B4.27/05/04 | DF | AA61HP | 27.0 | 0.105 | 0.425 | 2.86% | 4 | 4 | 0.9183 | 100, 75.2, 56.5, 42.5, 32.0, 24.0, 18.1, 13.6 | 1.33 | YES | | outlier removed by SD | FAL.3T3.SLS.27/05/04 |

## PARATHION

| | | | | | | | | | | | | | | | |
|---|---|---|---|---|---|---|---|---|---|---|---|---|---|---|---|
| ***IIVS*** | | | | | | | | | | | | | | | |
| A1 | RF | AA61PS | 50.6 | 0.174 | 0.402 | 5.64% | 1 | 3 | 0.9458 | 1000, 100, 10, 1, 0.1, 0.01, 0.001, 0.0001 | 10 | RF | range finder | ppt in 2X C1-C3 | SLS-A3 |
| B1 | DF | AA61PS | 20.7 | 0.071 | 0.435 | 5.34% | 3 | 3 | 0.8956 | 300, 167, 92.6, 51.4, 28.6, 15.9, 8.82, 4.90 | 1.8 | YES | | SD removed C1 & C2 from Hill function in PRISM due to upswing in response curve | SLS-B5 |

# 3T3 NRU Reference Substance Data

| Experiment ID 3T3 Cells | Assay Type[1] | Substance ID | $IC_{50}$ (ug/mL) | $IC_{50}$ (mM) | Mean VC OD[2] | Difference of right/left VC from mean VC[3] | Number of Points 0 - 50 %[4] | Number of Points 50 - 100 %[5] | $R^2$ [6] | Exposure Concentrations (ug/mL)[7] | Dilution Factor[8] | Acceptable Tests[9] | Rationale for Unacceptability | Notes | PC ID |
|---|---|---|---|---|---|---|---|---|---|---|---|---|---|---|---|
| B2 | DF | AA61PS | 27.5 | 0.095 | 0.348 | 13.21% | 5 | 3 | 0.9431 | 300, 167, 92.6, 51.4, 28.6, 15.9, 8.82, 4.90 | 1.8 | YES | | ppt in 2X C1-C4 | SLS-B9 |
| B3 | DF | AA61PS | 17.9 | 0.062 | 0.353 | 5.03% | 3 | 3 | 0.9864 | 300, 167, 92.6, 51.4, 28.6, 15.9, 8.82, 4.90 | 1.8 | YES | | ppt in 2X C1-C4 & 1X C1-C2; SD removed C1 & C2 from Hill function in PRISM due to ppts & flat response curve | SLS-B10 |
| ***ECBC*** | | | | | | | | | | | | | | | |
| AA61MD-A1 | RF | AA61MD | NA | NA | 0.329 | 7.11% | 2 | 6 | NA | 1000, 100, 10, 1, 0.1, 0.01, 0.001, 0.0001 | 10 | RF | range finder; PC failed | ppt in 1X C1 & 2X C1-C2 (cloudy) | SLS-P50 |
| AA61MD-B1 | DF | AA61MD | 18 | 0.062 | 0.648 | 8.54% | 3 | 5 | 0.9126 | 100, 46.5, 21.6, 10.1, 4.68, 2.18, 1.01, 0.47 | 2.15 | YES | | | SLS-P55 |
| AA61MD-B2 | DF | AA61MD | 13.6 | 0.047 | 0.418 | 10.70% | 3 | 5 | 0.8929 | 100, 46.5, 21.6, 10.1, 4.68, 2.18, 1.01, 0.47 | 2.15 | YES | | ppt in 2X C1 | SLS-P57 |
| AA61MD-B3 | DF | AA61MD | 36.4 | 0.125 | 0.321 | 10.09% | 2 | 5 | 0.9559 | 100, 46.5, 21.6, 10.1, 4.68, 2.18, 1.01, 0.47 | 2.15 | YES | | | SLS-P59 |
| ***FRAME*** | | | | | | | | | | | | | | | |
| FAL.3T3.KE.A1.28.05.04 | RF | AA61KE | 407 | 1.399 | 0.396 | 3.60% | 1 | 4 | 0.9626 | 1000, 100, 10, 1, 0.1, 0.01, 0.001, 0.0001 | 10 | RF | range finder | ppt in 1X C1-C2 | FAL.3T3.SLS.28.05.04 |
| FAL.3T3.KE.B1.04.06.04 | DF | AA61KE | 51.9 | 0.178 | 0.330 | 7.50% | 5 | 3 | 0.7298 | 2500, 1163, 541, 252, 117, 54.4, 25.3, 11.8 | 2.15 | YES | | ppt in 2X C1-C4; ppt in 1X C1-C2 | FAL.3T3.SLS.04.06.04 |
| FAL.3T3.KE.B2.18.06.04 | DF | AA61KE | NA | 0.121 | 0.714 | 6.99% | 3 | 0 | 0.8485 | 1000, 465, 216, 101, 46.8, 21.8, 10.1, 4.7 | 2.15 | NO | no points between 50 - 100% | ppt in 2X C1-C2; tox.curve going in wrong direction; SD suggests ppt is cause of bad curve | FAL.3T3.SLS.18.06.04 |
| FAL.3T3.KE.B3.09.07.04 | DF | AA61KE | 123 | 0.423 | 0.283 | 6.74% | 2 | 6 | 0.9136 | 500, 233, 108, 50.3, 23.4, 10.9, 5.1, 2.4 | 2.15 | YES | | ppt in 2X C1 | FAL.3T3.SLS.09.07.04 |
| FAL.3T3.KE.B4.16.07.04 | DF | AA61KE | 247 | 0.847 | 0.263 | 3.84% | 2 | 3 | 0.8273 | 500, 233, 108, 50.3, 23.4, 10.9, 5.1, 2.4 | 2.15 | YES | | ppt in 2X C1-C2; ppt in 1X C1-C2 | FAL.3T3.SLS.16.07.04 |

## PHENOBARBITAL

| | | | | | | | | | | | | | | | |
|---|---|---|---|---|---|---|---|---|---|---|---|---|---|---|---|
| ***IIVS*** | | | | | | | | | | | | | | | |
| A1 | RF | AA61FG | 77.4 | 0.333 | 0.283 | 14.30% | 1 | 5 | 0.9228 | 1000, 100, 10, 1, 0.1, 0.01, 0.001, 0.0001 | 10 | RF | range finder | | SLS-A5 |
| B1 | DF | AA61FG | 813 | 3.500 | 0.359 | 8.28% | 0 | 8 | 0.4992 | 200, 125, 78.1, 48.8, 30.5, 19.1, 11.9, 7.45 | 1.6 | NO | no points between 0 - 50% | | SLS-B6 |
| B2 | DF | AA61FG | 379 | 1.633 | 0.342 | 1.76% | 3 | 5 | 0.9762 | 1000, 714, 510, 364, 260, 186, 133, 94.9 | 1.4 | YES | | plates read 15-16 hr late; orignial reading used wrong OD wavelength | SLS-B11 |
| B2 (should be B3) | DF | AA61FG | 624 | 2.686 | 0.302 | 13.14% | 2 | 6 | 0.8659 | 1000, 714, 510, 364, 260, 186, 133, 94.9 | 1.4 | YES | | outliers removed bySD | SLS-B13 |
| B4 | DF | AA61FG | NA | NA | NA | NA | NA | NA | NA | NA | NA | NO | PC failed | | SLS-B14 |
| B5 | DF | AA61FG | 497 | 2.138 | 0.335 | 2.24% | 3 | 5 | 0.9744 | 1000, 714, 510, 364, 260, 186, 133, 94.9 | 1.4 | YES | | | SLS-B15 |
| B6 | DF | AA61FG | 405 | 1.742 | 0.302 | 1.43% | 3 | 5 | 0.9775 | 1000, 714, 510, 364, 260, 186, 133, 94.9 | 1.4 | YES | | | SLS-B16 |
| ***ECBC*** | | | | | | | | | | | | | | | |
| AA61KV-A1 | RF | AA61KV | 351 | 1.510 | 0.324 | 3.98% | 1 | 2 | 0.9078 | 1000, 100, 10, 1, 0.1, 0.01, 0.001, 0.0001 | 10 | RF | range finder | | SLS-P68 |
| AA61KV-B1 | DF | AA61KV | 624 | 2.686 | 0.405 | 1.63% | 3 | 5 | 0.9793 | 1500, 1020, 694, 472, 321, 219, 149, 101 | 1.47 | YES | | | SLS-P70 |
| AA61KV-B2 | DF | AA61KV | 505 | 2.173 | 0.412 | 8.99% | 3 | 5 | 0.7926 | 1500, 1020, 694, 472, 321, 219, 149, 101 | 1.47 | YES | | | SLS-P71 |
| AA61KV-B3 | DF | AA61KV | 773 | 3.327 | 0.410 | 6.44% | 2 | 6 | 0.9504 | 1500, 1020, 694, 472, 321, 219, 149, 101 | 1.47 | YES | | | SLS-P72 |
| ***FRAME*** | | | | | | | | | | | | | | | |
| FAL.3T3.NJ.A1.21.10.04 | RF | AA61NJ | 796 | 3.428 | 0.169 | 1.18% | 1 | 0 | 0.5114 | 1000, 100, 10, 1.0, 0.1, 0.01, 0.001, 0.0001 | 10 | RF | range finder; no points between 50-100% | | FAL.3T3.SLS.21.10.04 |

# 3T3 NRU Reference Substance Data

| Experiment ID 3T3 Cells | Assay Type[1] | Substance ID | $IC_{50}$ (ug/mL) | $IC_{50}$ (mM) | Mean VC OD[2] | Difference of right/left VC from mean VC[3] | Number of Points 0 - 50 %[4] | Number of Points 50 - 100 %[5] | $R^2$ [6] | Exposure Concentrations (ug/mL)[7] | Dilution Factor[8] | Acceptable Tests[9] | Rationale for Unacceptability | Notes | PC ID |
|---|---|---|---|---|---|---|---|---|---|---|---|---|---|---|---|
| FAL.3T3.NJ.B1.11.11.04 | DF | AA61NJ | 435 | 1.871 | 0.311 | 4.08% | 4 | 4 | 0.8929 | 2000, 1361, 926, 630, 428, 291, 198,135 | 1.47 | YES | | ppt in 2X C1 | FAL.3T3.SLS.10.11.04 |
| FAL.3T3.NJ.B2.25.11.04 | DF | AA61NJ | 832 | 3.582 | 0.295 | 9.31% | 2 | 2 | 0.8514 | 2500, 1163, 541, 252, 117, 54.4, 25.3, 11.8 | 2.15 | YES | | ppt in 2X C1 | FAL.3T3.SLS.25.11.04 |
| FAL.3T3.NJ.B3.26.11.04 | DF | AA61NJ | 912 | 3.927 | 0.204 | 1.06% | 2 | 2 | 0.9435 | 2500, 1163, 541, 252, 117, 54.4, 25.3, 11.8 | 2.15 | YES | | ppt in 2X C1 | FAL.3T3.SLS.26.11.04 |
| **PHENOL** | | | | | | | | | | | | | | | |
| ***IIVS*** | | | | | | | | | | | | | | | |
| A1 | RF | AA61PG | 3.12 | 0.033 | 0.418 | 100.04% | 2 | 4 | 0.9933 | 10000, 1000, 100, 10, 1, 0.1, 0.01, 0.001 | 10 | RF | range finder | VC1 ODs < VC2 ODs; VC1 removed from subsequent analysis; volatility issues. | SLS-A3 |
| B1 | DF | AA61PG | NA | NA | 0.465 | 1.52% | 0 | 3 | 0.5739 | 20.0, 12.5, 7.81, 4.88, 3.05, 1.91, 1.19, 0.745 | 1.6 | NO | no points between 0 - 50% | plate sealer used | SLS-B4 |
| B2 | DF | AA61PG | 54.8 | 0.583 | 0.422 | 2.43% | 3 | 5 | 0.9767 | 200, 125, 78.1, 48.8, 30.5, 19.1, 11.9, 7.45 | 1.6 | YES | | plate sealer used | SLS-B6 |
| B3 | DF | AA61PG | 33.6 | 0.357 | 0.392 | 34.71% | 4 | 4 | 0.9925 | 200, 125, 78.1, 48.8, 30.5, 19.1, 11.9, 7.45 | 1.6 | NO | % VC difference > 15 | plates read 15-16 hr late; orignial reading used wrong OD wavelength; VC2 used to calculate viability; volatility problem | SLS-B11 |
| B4 | DF | AA61PG | 65.9 | 0.700 | 0.337 | 1.73% | 3 | 5 | 0.9669 | 200, 125, 78.1, 48.8, 30.5, 19.1, 11.9, 7.45 | 1.6 | YES | | | SLS-B12 |
| B5 | DF | AA61PG | NA | NA | NA | NA | NA | NA | NA | NA | NA | NO | PC failed | | SLS-B14 |
| B6 | DF | AA61PG | 53.6 | 0.569 | 0.411 | 3.44% | 3 | 5 | 0.9775 | 200, 125, 78.1, 48.8, 30.5, 19.1, 11.9, 7.45 | 1.6 | YES | | | SLS-B15 |
| ***ECBC*** | | | | | | | | | | | | | | | |
| AA61FV-A1 | RF | AA61FV | NA | NA | 0.140 | 99.80% | 4 | 0 | NA | 10000,1000, 100, 10, 1,0.1, 0.01, 0.001 | 10 | RF | range finder | probable volatility problem; VC1 <<< VC2 | SLS-11 |
| AA61FV-A2 (sealer) | RF | AA61FV | 56.0 | 0.595 | 0.430 | 3.64% | 2 | 1 | 0.8997 | 1000, 100, 10, 1, 0.1, 0.01, 0.001, 0.0001 | 10 | RF | range finder | | SLS-P45 |
| AA61FV-B1(sealer) | DF | AA61FV | 50.6 | 0.537 | 0.305 | 4.48% | 4 | 4 | 0.9861 | 1000, 465, 216, 101, 46.8, 21.8, 10.1 | 2.15 | YES | | | SLS-P47 |
| AA61FV-B2 (sealer) | DF | AA61FV | NA | NA | 0.280 | 0.51% | 5 | 3 | NA | 1000, 465, 216, 101, 46.8, 21.8, 10.1, 4.7 | 2.15 | NO | PC failed | | SLS-P50 |
| AA61FV-B3 (sealer) | DF | AA61FV | NA | NA | 0.341 | 7.61% | 4 | 4 | NA | 500, 233, 108, 50.3, 23.4, 10.9, 5.06, 2.35 | 2.15 | NO | PC failed | | SLS-P52 |
| AA61FV-B4 (sealer) | DF | AA61FV | 60.8 | 0.646 | 0.552 | 2.48% | 3 | 3 | 0.9615 | 500, 233, 108, 50.3, 23.4, 10.9, 5.06, 2.35 | 2.15 | YES | | | SLS-P54 |
| AA61FV-B5 (sealer) | DF | AA61FV | NA | NA | 0.354 | 3.58% | 4 | 4 | NA | 500, 233, 108, 50.3, 23.4, 10.9, 5.06, 2.35 | 2.15 | NO | PC failed | | SLS-P56 |
| AA61FV-B6 (sealer) | DF | AA61FV | 39.1 | 0.415 | 0.416 | 4.85% | 4 | 4 | 0.9808 | 500, 233, 108, 50.3, 23.4, 10.9, 5.06, 2.35 | 2.15 | YES | | | SLS-P58 |
| ***FRAME*** | | | | | | | | | | | | | | | |
| FAL.3T3.MS.A1.21.05.04 | RF | AA61MS | 10.4 | 0.110 | 0.176 | 99.85% | 2 | 1 | 0.4657 | 10000, 1000, 100, 10, 1, 0.1, 0.01, 0.001 | 10 | RF | range finder | volatility problem | FAL.3T3.SLS.21.05.04 |
| FAL.3T3.MS.B1.17/06/04 | DF | AA61MS | NA | NA | 0.387 | 40.08% | 2 | 1 | NA | 1000, 317, 100, 31.7, 10.0, 3.2, 1.0, 0.3 | 3.16 | NO | % VC difference > 15 | | FAL.3T3.SLS.17.06.04 |
| FAL.3T3.MS.B2.24/06/04 | DF | AA61MS | 375 | 3.984 | 0.154 | 18.61% | 1 | 4 | 0.9472 | 1000, 317, 100, 31.7, 10.0, 3.2, 1.0, 0.3 | 3.16 | NO | % VC difference > 15 | used plate sealer; volatility problem | FAL.3T3.SLS.24.06.04 |
| FAL.3T3.MS.B3.08.07.04 | DF | AA61MS | 142 | 1.504 | 0.308 | 26.58% | 4 | 1 | 0.9369 | 1500, 698, 325, 151, 70.2, 32.7, 15.2, 7.1 | 2.15 | NO | % VC difference > 15 | | FAL.3T3.SLS.08.07.04 |
| FAL.3T3.MS.B4.09.07.04 | DF | AA61MS | 37.8 | 0.401 | 0.301 | 25.71% | 3 | 2 | 0.5823 | 1500, 698, 325, 151, 70.2, 32.7, 15.2, 7.1 | 2.15 | NO | % VC difference > 15 | | FAL.3T3.SLS.09.07.04 |
| FAL.3T3.MS.B5.16.07.04 | DF | AA61MS | 110 | 1.168 | 0.360 | 7.07% | 3 | 2 | 0.9794 | 1500, 698, 325, 151, 70.2, 32.7, 15.2, 7.1 | 2.15 | YES | | | FAL.3T3.SLS.16.07.04 |
| FAL.3T3.MS.B6.17.09.04 | DF | AA61MS | 124 | 1.322 | 0.530 | 17.30% | 3 | 2 | 0.9579 | 1500, 698, 325, 151, 70.2, 32.7, 15.2, 7.1 | 2.15 | NO | % VC difference > 15 | did not use plate sealer | FAL.3T3.SLS.17.09.04 |
| FAL.3T3.MS.B7.23.09.04 | DF | AA61MS | 126 | 1.335 | 0.313 | 7.13% | 3 | 2 | 0.9717 | 1500, 698, 325, 151, 70.2, 32.7, 15.2, 7.1 | 2.15 | YES | | outlier removed bySD | FAL.3T3.SLS.23.09.04 |

# 3T3 NRU Reference Substance Data

| Experiment ID 3T3 Cells | Assay Type[1] | Substance ID | $IC_{50}$ (ug/mL) | $IC_{50}$ (mM) | Mean VC OD[2] | Difference of right/left VC from mean VC[3] | Number of Points 0 - 50 %[4] | Number of Points 50 - 100 %[5] | $R^2$ [6] | Exposure Concentrations (ug/mL)[7] | Dilution Factor[8] | Acceptable Tests[9] | Rationale for Unacceptability | Notes | PC ID |
|---|---|---|---|---|---|---|---|---|---|---|---|---|---|---|---|
| FAL.3T3.MS.B8.14.10.04 | DF | AA61MS | 116 | 1.231 | 0.234 | 27.97% | 4 | 2 | 0.9535 | 1500, 698, 325, 151, 70.2, 32.7, 15.2, 7.1 | 2.15 | NO | % VC difference > 15 | volatility problem | FAL.3T3.SLS.14.10.04 |
| FAL.3T3.MS.B9.21.10.04 | DF | AA61MS | 77.3 | 0.821 | 0.339 | 13.82% | 4 | 3 | 0.9581 | 1000, 465, 216, 101, 46.8, 21.8, 10.1, 4.7 | 2.15 | YES | | | FAL.3T3.SLS.21.10.04 |

## PHENYLTHIOUREA

| | | | | | | | | | | | | | | | |
|---|---|---|---|---|---|---|---|---|---|---|---|---|---|---|---|
| ***IIVS*** | | | | | | | | | | | | | | | |
| A1 | RF | AA61PV | 49.4 | 0.325 | 0.369 | 1.67% | 2 | 3 | 0.8971 | 1000, 100, 10, 1, 0.1, 0.01, 0.001, 0.0001 | 10 | RF | range finder | | SLS-A3 |
| B1 | DF | AA61PV | 113 | 0.741 | 0.446 | 4.65% | 3 | 4 | 0.9548 | 300, 188, 117, 73.2, 45.8, 28.6, 17.9, 11.2 | 1.6 | YES | | | SLS-B5 |
| B2 | DF | AA61PV | 83.9 | 0.552 | 0.262 | 5.15% | 6 | 2 | 0.9737 | 1000, 625, 391,244, 153, 95.4, 59.6, 37.3 | 1.6 | YES | | | SLS-B13 |
| B3 | DF | AA61PV | NA | NA | NA | NA | NA | NA | NA | NA | NA | NO | PC failed | | SLS-B14 |
| B4 | DF | AA61PV | 70.0 | 0.460 | 0.335 | 8.85% | 6 | 2 | 0.9580 | 1000, 625, 391,244, 153, 95.4, 59.6, 37.3 | 1.6 | YES | | | SLS-B15 |
| ***ECBC*** | | | | | | | | | | | | | | | |
| AA61LN-A1 | RF | AA61LN | NA | #VALUE! | 0.284 | 5.42% | 2 | 6 | NA | 1000, 100, 10, 1, 0.1, 0.01, 0.001, 0.0001 | 10 | RF | range finder; PC failed | | SLS-P51 |
| AA61LN-B1 | DF | AA61LN | NA | #VALUE! | 0.350 | 14.50% | 4 | 4 | NA | 500, 233, 108, 50.3, 23.4, 10.9, 5.06, 2.35 | 2.15 | NO | PC failed | | SLS-P53 |
| AA61LN-B2 | DF | AA61LN | 48.6 | 0.320 | 0.613 | 11.02% | 4 | 4 | 0.9747 | 500, 233, 108, 50.3, 23.4, 10.9, 5.06, 2.35 | 2.15 | YES | | | SLS-P55 |
| AA61LN-B3 | DF | AA61LN | 9.11 | 0.060 | 0.601 | 9.45% | 5 | 3 | 0.9428 | 500, 233, 108, 50.3, 23.4, 10.9, 5.06, 2.35 | 2.15 | YES | | | SLS-P57 |
| AA61LN-B4 | DF | AA61LN | 32.7 | 0.215 | 0.374 | 8.69% | 4 | 4 | 0.9730 | 500, 233, 108, 50.3, 23.4, 10.9, 5.06, 2.35 | 2.15 | YES | | | SLS-P59 |
| ***FRAME*** | | | | | | | | | | | | | | | |
| FAL.3T3.JB.A1.27/05/04 | RF | AA61JB | 34.0 | 0.223 | 0.302 | 7.47% | 2 | 1 | 0.9382 | 1000, 100, 10, 1, 0.1, 0.01, 0.001, 0.0001 | 10 | RF | range finder | | FAL.3T3.SLS.27/05/04 |
| FAL.3T3.JB.B1.04/06/04 | DF | AA61JB | 164 | 1.075 | 0.320 | 7.72% | 3 | 5 | 0.8392 | 2500, 791, 250, 79.2, 25.1, 7.9, 2.5, 0.8 | 3.16 | YES | | ppt in 2X C1 | FAL.3T3.SLS.04.06.04 |
| FAL.3T3.JB.B2.18/06/04 | DF | AA61JB | 288 | 1.891 | 0.388 | 2.92% | 2 | 3 | 0.9514 | 2500, 791, 250, 79.2, 25.1, 7.9, 2.5, 0.8 | 3.16 | YES | | ppt in 2X C1 | FAL.3T3.SLS.18.06.04 |
| FAL.3T3.JB.B3.08.07.04 | DF | AA61JB | 264 | 1.736 | 0.250 | 6.43% | 2 | 6 | 0.8568 | 2500, 791, 250, 79.2, 25.1, 7.9, 2.5, 0.8 | 3.16 | YES | | ppt in 2X C1 | FAL.3T3.SLS.08.07.04 |

## PHYSOSTIGMINE

| | | | | | | | | | | | | | | | |
|---|---|---|---|---|---|---|---|---|---|---|---|---|---|---|---|
| ***IIVS*** | | | | | | | | | | | | | | | |
| A1 | RF | AA61NF | 673 | 2.444 | 0.262 | 11.85% | 1 | 4 | 0.9016 | 1000, 100, 10, 1, 0.1, 0.01, 0.001, 0.0001 | 10 | RF | range finder | | SLS-A5 |
| B1 | DF | AA61NF | 75.9 | 0.275 | 0.517 | 10.55% | 2 | 0 | 0.8901 | 1000, 714, 510, 364, 260, 186, 133, 94.9 | 1.4 | NO | no points between 50 - 100% | | SLS-B5 |
| B2 | DF | AA61NF | 30.1 | 0.109 | 0.411 | 6.64% | 2 | 4 | 0.9115 | 200, 125, 78.1, 48.8, 30.5, 19.1, 11.9, 7.45 | 1.6 | YES | | | SLS-B6 |
| B3 | DF | AA61NF | 19.8 | 0.072 | 0.338 | 7.64% | 2 | 3 | 0.9406 | 200, 125, 78.1, 48.8, 30.5, 19.1, 11.9, 7.45 | 1.6 | YES | | outliers removed bySD | SLS-B13 |
| B4 | DF | AA61NF | NA | NA | NA | NA | NA | NA | NA | NA | NA | NO | PC failed | | SLS-B14 |
| B5 | DF | AA61NF | 16.0 | 0.058 | 0.350 | 0.98% | 3 | 2 | 0.9600 | 200, 125, 78.1, 48.8, 30.5, 19.1, 11.9, 7.45 | 1.6 | YES | | | SLS-B15 |
| B6 | DF | AA61NF | 15.8 | 0.057 | 0.365 | 1.30% | 4 | 2 | 0.9575 | 200, 125, 78.1, 48.8, 30.5, 19.1, 11.9, 7.45 | 1.6 | YES | | | SLS-B16 |
| ***ECBC*** | | | | | | | | | | | | | | | |
| AA61FT-A1 | RF | AA61FT | NA | NA | 0.281 | 7.43% | 2 | 4 | NA | 1000, 100, 10, 1, 0.1, 0.01, 0.001, 0.0001 | 10 | RF | range finder; PC failed | | SLS-P51 |
| AA61FT-B1 | DF | AA61FT | 42.8 | 0.155 | 0.678 | 8.75% | 2 | 6 | 0.9263 | 80.0, 54.4, 37.0, 25.2, 17.1, 11.7, 7.93, 5.39 | 1.47 | YES | | | SLS-P55 |

# 3T3 NRU Reference Substance Data

| Experiment ID 3T3 Cells | Assay Type[1] | Substance ID | $IC_{50}$ (ug/mL) | $IC_{50}$ (mM) | Mean VC OD[2] | Difference of right/left VC from mean VC[3] | Number of Points 0 - 50 %[4] | Number of Points 50 - 100 %[5] | $R^2$ [6] | Exposure Concentrations (ug/mL)[7] | Dilution Factor[8] | Acceptable Tests[9] | Rationale for Unacceptability | Notes | PC ID |
|---|---|---|---|---|---|---|---|---|---|---|---|---|---|---|---|
| AA61FT-B2 | DF | AA61FT | 13.0 | 0.047 | 0.592 | 9.27% | 5 | 3 | 0.8332 | 80.0, 54.4, 37.0, 25.2, 17.1, 11.7, 7.93, 5.39 | 1.47 | YES | | | SLS-P57 |
| AA61FT-B3 | DF | AA61FT | 28.8 | 0.105 | 0.354 | 8.67% | 5 | 3 | 0.9265 | 80.0, 54.4, 37.0, 25.2, 17.1, 11.7, 7.93, 5.39 | 1.47 | YES | | | SLS-P59 |
| ***FRAME*** | | | | | | | | | | | | | | | |
| FAL.3T3.GT.A1.21.10.04 | RF | AA61GT | 34.4 | 0.125 | 0.217 | 3.30% | 1 | 0 | 0.9835 | 1000, 100, 10, 1.0, 0.1, 0.01, 0.001, 0.0001 | 10 | RF | range finder; no points between 50-100% | | FAL.3T3.SLS.21.10.04 |
| FAL.3T3.GT.B1.25.11.04 | DF | AA61GT | 38.2 | 0.139 | 0.344 | 4.78% | 4 | 2 | 0.9738 | 100, 75.2, 56.5, 42.5, 32.0, 24.0, 18.1, 13.6 | 1.33 | YES | | ppt in 2X C1-C2; | FAL.3T3.SLS.25.11.04 |
| FAL.3T3.GT.B2.26.11.04 | DF | AA61GT | 35.7 | 0.130 | 0.167 | 1.60% | 4 | 3 | 0.6701 | 100, 75.2, 56.5, 42.5, 32.0, 24.0, 18.1, 13.6 | 1.33 | YES | | ppt in 2X C1-C2; | FAL.3T3.SLS.26.11.04 |
| FAL.3T3.GT.B3.02.12.04 | DF | AA61GT | 77.1 | 0.280 | 0.179 | 5.82% | 0 | 1 | 0.2009 | 100, 75.2, 56.5, 42.5, 32.0, 24.0, 18.1, 13.6 | 1.33 | NO | no points between 0-50% | most values above 125% | FAL.3T3.SLS.02.12.04 (RB) |
| FAL.3T3.GT.B4.09.12.04 | DF | AA61GT | 39.5 | 0.144 | 0.286 | 6.43% | 2 | 2 | 0.9799 | 100, 75.2, 56.5, 42.5, 32.0, 24.0, 18.1, 13.6 | 1.33 | YES | | | FAL.3T3.SLS.09.12.04 |

## POTASSIUM I CHLORIDE

| | | | | | | | | | | | | | | | |
|---|---|---|---|---|---|---|---|---|---|---|---|---|---|---|---|
| ***IIVS*** | | | | | | | | | | | | | | | |
| A1 | RF | AA61FF | 611 | 8.196 | 0.457 | 25.09% | 1 | 1 | 0.8205 | 10000, 1000, 100, 10, 1, 0.1, 0.01, 0.001 | 10 | RF | | | SLS-A1 |
| B1 | DF | AA61FF | 4150 | 55.667 | 0.394 | 5.13% | 2 | 6 | 0.9627 | 10000, 5556, 3086, 1715, 953, 529, 294, 163 | 1.8 | YES | | | SLS-B1 |
| B2 | DF | AA61FF | 3660 | 49.095 | 0.536 | 1.54% | 2 | 5 | 0.9837 | 10000, 6667, 4444, 2963, 1975, 1317, 878, 585 | 1.5 | YES | | | SLS-B2 |
| B3 | DF | AA61FF | 3230 | 43.327 | 0.561 | 1.06% | 2 | 5 | 0.9387 | 10000, 6667, 4444, 2963, 1975, 1317, 878, 585 | 1.5 | NO | PC failed | | SLS-B3 |
| B4 | DF | AA61FF | 3320 | 44.534 | 0.442 | 4.82% | 2 | 4 | 0.9856 | 10000, 6667, 4444, 2963, 1975, 1317, 878, 585 | 1.5 | YES | | | SLS-B4 |
| ***ECBC*** | | | | | | | | | | | | | | | |
| AA61KM-A1 | RF | AA61KM | 2160 | 28.974 | 0.424 | 3.92% | 0 | 0 | 0.8877 | 10000, 1000, 100, 10, 1.0, 0.1, 0.01, 0.001 | 10 | RF | no points between 10 - 90%; range finder | | SLS-P1 |
| AA61KM-B1 | DF | AA61KM | 3140 | 42.119 | 0.607 | 0.88% | 1 | 4 | 0.8821 | 10000, 6803, 4628, 3148, 2142, 1457, 991, 674 | 1.47 | YES | | | SLS-P6 |
| AA61KM-B2 | DF | AA61KM | 4060 | 54.460 | 0.552 | 4.78% | 1 | 1 | 0.9805 | 10000, 6803, 4628, 3148, 2142, 1457, 991, 674 | 1.47 | YES | | | SLS-P8 |
| AA61KM-B3 | DF | AA61KM | 3160 | 42.388 | 0.526 | 0.98% | 1 | 3 | 0.9435 | 10000, 6803, 4628, 3148, 2142, 1457, 991, 674 | 1.47 | YES | | | SLS-P10 |
| AA61KM-B4 | DF | AA61KM | 3080 | 41.315 | 0.676 | 1.49% | 1 | 4 | 0.9563 | 10000, 6803, 4628, 3148, 2142, 1457, 991, 674 | 1.47 | YES | | | SLS-P13 |
| ***FRAME*** | | | | | | | | | | | | | | | |
| FAL.3T3.A1.MY.200603 | RF | AA61MY | 1290 | 17.304 | 0.745 | 1.93% | 0 | 1 | 0.9580 | 10000,1000, 100, 10, 1.0, 0.1, 0.01, 0.001 | 10 | RF | no points between 10 - 50%; range finder | | FAL.3T3.SLS2.A1.200603 |
| FAL.3T3.MY.A2.27.06.03 | RF | AA61MY | 9440 | 126.626 | 0.511 | 2.94% | 0 | 2 | 0.7401 | 6000, 4080, 2780, 1890, 1280, 874, 595, 405 | 1.47 | NO | no points between 10 - 50%; low r2; range finder | | FAL.3T3.SLS.A2.27.06.03 |
| FAL.3T3.MY.B1.04.07.03 | DF | AA61MY | 4470 | 59.960 | 0.551 | 2.97% | 0 | 4 | 0.9514 | 20000, 13600, 9260, 6300, 4280, 2910, 1980, 1350 | 1.47 | NO | PC failed; no points between 10 - 50% | | FAL.3T3.SLS.04.07.03 |

# 3T3 NRU Reference Substance Data

| Experiment ID 3T3 Cells | Assay Type[1] | Substance ID | $IC_{50}$ (ug/mL) | $IC_{50}$ (mM) | Mean VC OD[2] | Difference of right/left VC from mean VC[3] | Number of Points 0 - 50 %[4] | Number of Points 50 - 100 %[5] | $R^2$ [6] | Exposure Concentrations (ug/mL)[7] | Dilution Factor[8] | Acceptable Tests[9] | Rationale for Unacceptability | Notes | PC ID |
|---|---|---|---|---|---|---|---|---|---|---|---|---|---|---|---|
| FAL.3T3.B2.MY.11.07.03 | DF | AA61MY | 4350 | 58.350 | 0.583 | 0.25% | 1 | 4 | 0.9622 | 15000, 10204, 6942, 4722, 3212, 2185, 1487, 1011 | 1.47 | YES | | | FAL.3T3.SLS.11.07.03 |
| FAL.3T3.B3.MY.18.07.03 | DF | AA61MY | 4760 | 63.850 | 0.499 | 0.50% | 2 | 2 | 0.9202 | 15000, 10204, 6942, 4722, 3212, 2185, 1487, 1011 | 1.47 | YES | | | FAL.3T3.SLS.18.07.03 |
| FAL.3T3.B4.MY.25.07.03 | DF | AA61MY | 4740 | 63.581 | 0.478 | 6.48% | 1 | 2 | 0.9631 | 10000, 7519, 5633, 4251, 3196, 2403, 1807, 1350 | 1.33 | YES | | | FAL.3T3.SLS.25.07.03 |
| FAL.3T3.B5.MY.070803 | DF | AA61MY | 3440 | 46.144 | 1.263 | 6.60 | 3 | 5 | 0.9364 | 10000, 6802, 4627, 3148, 2141, 1456, 991, 674 | 1.47 | NO | PC failed | | FAL.3T3.SLS.070803 |
| FAL.3T3.B6.MY.080803 | DF | AA61MY | 1160 | 15.560 | 0.432 | 11.91 | 5 | 2 | 0.6458 | 10000, 6802, 4627, 3148, 2141, 1456, 991, 674 | 1.47 | NO | PC failed; low r2 | | FAL.3T3.SLS.080803 |
| FAL.3T3.MY.B7.120903 | DF | AA61MY | 1920 | 25.755 | 0.629 | 1.58 | 4 | 2 | 0.9144 | 10000, 7519, 5633, 4251, 3196, 2403, 1807, 1358 | 1.33 | YES | | | FAL.3T3.SLS.120903 |
| FAL.3T3.MY.B8.180903 | DF | AA61MY | 3450 | 46.278 | 0.367 | 6.74 | 3 | 5 | 0.8706 | 10000, 7519, 5633, 4251, 3196, 2403, 1807, 1358 | 1.33 | YES | | | FAL.3T3.SLS.180903 |

## POTASSIUM CYANIDE

| | | | | | | | | | | | | | | | |
|---|---|---|---|---|---|---|---|---|---|---|---|---|---|---|---|
| ***IIVS*** | | | | | | | | | | | | | | | |
| A1 | RF | AA61KW | 25.5 | 0.392 | 0.116 | 99.22% | 1 | 5 | 0.9238 | 10000, 1000, 100, 10, 1, 0.1, 0.01, 0.001 | 10 | RF | range finder | VC1 ODs < VC2 ODs;VC1 removed from subsequent analysis; volatility issues. | SLS-A5 |
| B1 | DF | AA61KW | 19.8 | 0.304 | 0.403 | 7.47% | 3 | 3 | 0.9494 | 100, 66.7, 44.4, 29.6, 19.8, 13.2, 8.78, 5.85 | 1.5 | YES | | plate sealer used | SLS-B4 |
| B2 | DF | AA61KW | 18.9 | 0.291 | 0.366 | 0.25% | 5 | 3 | 0.9756 | 100, 66.7, 44.4, 29.6, 19.8, 13.2, 8.78, 5.85 | 1.5 | YES | | | SLS-B7 |
| B3 | DF | AA61KW | 17.9 | 0.275 | 0.408 | 5.75% | 5 | 3 | 0.9767 | 100, 66.7, 44.4, 29.6, 19.8, 13.2, 8.78, 5.85 | 1.5 | YES | | | SLS-B8 |
| ***ECBC*** | | | | | | | | | | | | | | | |
| AA61MN-A1 | RF | AA61MN | 421 | 6.461 | 0.085 | 0.69% | 1 | 6 | 0.9516 | 10000, 1000, 100, 10, 1, 0.1, 0.01, 0.001 | 10 | RF | range finder | ppt in 1X C1 | SLS-P49 |
| AA61MN-B1 (sealer) | DF | AA61MN | NA | NA | 0.125 | 6.06% | 7 | 0 | NA | 1500, 1020, 694, 472, 321, 219, 149, 101 | 1.47 | NO | no points between 50-100%; PC failed | ppt in 1X C1-C5 | SLS-P52 |
| AA61MN-B2 (sealer) | DF | AA61MN | NA | NA | 0.434 | 3.69% | 0 | 8 | NA | 200, 136, 92.6, 63.0, 42.8, 29.1, 19.8, 13.5 | 1.47 | NO | no points between 0 - 50% | | SLS-P62 |
| AA61MN-B3 (sealer) | DF | AA61MN | 19.6 | 0.301 | 0.325 | 1.90% | 3 | 5 | 0.9619 | 100, 46.5, 21.6, 10.1, 4.68, 2.18, 1.01, 0.47 | 2.15 | YES | | | SLS-P64 |
| AA61MN-B4 (sealer) | DF | AA61MN | 13.9 | 0.213 | 0.435 | 9.17% | 3 | 5 | 0.9485 | 100, 46.5, 21.6, 10.1, 4.68, 2.18, 1.01, 0.47 | 2.15 | YES | | ppt in 2X C1-C2; ppt in 1X C1-C5 | SLS-P66 |
| AA61MN-B5 (sealer) | DF | AA61MN | 12.5 | 0.192 | 0.446 | 0.73% | 3 | 5 | 0.8689 | 100, 46.5, 21.6, 10.1, 4.68, 2.18, 1.01, 0.47 | 2.15 | YES | | | SLS-P68 |
| ***FRAME*** | | | | | | | | | | | | | | | |
| FAL.3T3.GP.A1.21.10.04 | RF | AA61GP | 153 | 2.357 | 0.029 | 97.12% | 0 | 0 | 0.9807 | 10000, 1000, 100, 10, 1.0, 0.1, 0.01, 0.001 | 10 | RF | range finder; no points between 0-100% | ppt in 1X C1 | FAL.3T3.SLS.21.10.04 |
| FAL.3T3.GP.B1.11.11.04 | DF | AA61GP | 219 | 3.360 | 0.203 | 10.87% | 8 | 0 | 0.8961 | 1000, 826, 683, 565, 467, 386, 319, 263 | 1.21 | NO | no points between 50-100% | ppt in 1X C1-C8; viability not above 50% for any conc | FAL.3T3.SLS.10.11.04 |
| FAL.3T3.GP.B2.26.11.04 | DF | AA61GP | 253 | 3.884 | 0.184 | 5.76% | 2 | 6 | 0.3284 | 500, 413, 342,282, 233,193,159, 132 | 1.21 | YES | | | FAL.3T3.SLS.26.11.04 |
| FAL.3T3.GP.B3.09.12.04 | DF | AA61GP | 172 | 2.638 | 0.195 | 22.57% | 6 | 1 | 0.6436 | 500, 413, 342,282, 233,193,159, 132 | 1.21 | NO | % VC difference >15 | | FAL.3T3.SLS.09.12.04 |
| FAL.3T3.GP.B4.10.12.04 | DF | AA61GP | 106 | 1.634 | 0.236 | 5.84% | 4 | 2 | 0.5610 | 500, 376, 283, 213, 160, 120, 90.3, 67.9 | 1.33 | YES | | | FAL.3T3.SLS.10.12.04 |

# 3T3 NRU Reference Substance Data

| Experiment ID 3T3 Cells | Assay Type[1] | Substance ID | $IC_{50}$ (ug/mL) | $IC_{50}$ (mM) | Mean VC OD[2] | Difference of right/left VC from mean VC[3] | Number of Points 0 - 50 %[4] | Number of Points 50 - 100 %[5] | $R^2$ [6] | Exposure Concentrations (ug/mL)[7] | Dilution Factor[8] | Acceptable Tests[9] | Rationale for Unacceptability | Notes | PC ID |
|---|---|---|---|---|---|---|---|---|---|---|---|---|---|---|---|
| FAL.3T3.GP.B5.15.12.04 | DF | AA61GP | 117 | 1.804 | 0.126 | 2.18% | 4 | 4 | 0.6827 | 500, 376, 283, 213, 160, 120, 90.3, 67.9 | 1.33 | YES | | | FAL.3T3.SLS.15.12.04 |
| **PROCAINAMIDE HCL** | | | | | | | | | | | | | | | |
| ***IIVS*** | | | | | | | | | | | | | | | |
| A1 | RF | AA61ML | 406 | 1.492 | 0.421 | 5.01% | 0 | 1 | 0.9614 | 10000, 1000, 100, 10, 1, 0.1, 0.01, 0.001 | 10 | RF | range finder | | SLS-A4 |
| B1 | DF | AA61ML | 453 | 1.666 | 0.485 | 3.11% | 1 | 1 | 0.9213 | 1000, 714, 510, 364, 260, 186, 133, 94.9 | 1.4 | YES | | | SLS-B4 |
| B2 | DF | AA61ML | 485 | 1.786 | 0.400 | 0.77% | 1 | 0 | 0.8992 | 1000, 714, 510, 364, 260, 186, 133, 94.9 | 1.4 | NO | no points between 50-100% | outliers removed bySD | SLS-B7 |
| B3 | DF | AA61ML | 528 | 1.944 | 0.453 | 4.01% | 1 | 1 | 0.8702 | 1000, 714, 510, 364, 260, 186, 133, 94.9 | 1.4 | YES | | | SLS-B8 |
| B4 | DF | AA61ML | 511 | 1.878 | 0.457 | 3.83% | 3 | 1 | 0.9248 | 1000, 833, 694, 579, 482, 402, 335, 279 | 1.2 | YES | | plates read 15-16 hr late; orignial reading used wrong OD wavelength | SLS-B11 |
| ***ECBC*** | | | | | | | | | | | | | | | |
| AA61KC-A1 | RF | AA61KC | 363 | 1.336 | 0.365 | 3.67% | 0 | 1 | 0.9503 | 10000,1000, 100, 10, 1,0.1, 0.01, 0.001 | 10 | RF | range finder | | SLS-P13 |
| AA61KC-B1 | DF | AA61KC | 406 | 1.495 | 0.499 | 11.41% | 3 | 3 | 0.9929 | 1000, 680, 463, 315, 214, 146, 99.1, 67.4 | 1.47 | YES | | | SLS-P37 |
| AA61KC-B2 | DF | AA61KC | 412 | 1.516 | 0.392 | 0.00% | 4 | 1 | 0.9682 | 800, 661, 546, 452, 373, 308, 255, 211 | 1.21 | YES | | | SLS-P40 |
| AA61KC-B3 | DF | AA61KC | 383 | 1.409 | 0.528 | 4.19% | 3 | 1 | 0.9813 | 800, 661, 546, 452, 373, 308, 255, 211 | 1.21 | YES | | | SLS-P41 |
| ***FRAME*** | | | | | | | | | | | | | | | |
| FAL.3T3.GV.A1.10.09.04 | RF | AA61GV | 550 | 2.022 | 0.582 | 11.63% | 2 | 0 | 0.8758 | 10000, 1000, 100, 10, 1, 0.1, 0.01, 0.001 | 10 | RF | range finder; no points between 50 - 100% | | FAL.3T3.SLS.10.09.04 |
| FAL.3T3.GV.B1.16.09.04 | DF | AA61GV | 423 | 1.555 | 0.367 | 5.86% | 4 | 0 | 0.8061 | 1000, 752, 565, 425, 320, 240, 181, 136 | 1.33 | NO | no points between 50 - 100% | outlier removed by SD | FAL.3T3.SLS.16.09.04 |
| FAL.3T3.GV.B2.23.09.04 | DF | AA61GV | 433 | 1.591 | 0.405 | 3.52% | 1 | 1 | 0.4667 | 500, 413, 342, 282, 233, 193, 159, 132 | 1.21 | YES | | | FAL.3T3.SLS.23.09.04 |
| FAL.3T3.GV.B3.14.10.04 | DF | AA61GV | 426 | 1.566 | 0.340 | 7.26% | 3 | 1 | 0.5102 | 750, 620, 512, 423, 350, 289, 239, 197 | 1.21 | YES | | C5-C8 show % viabilities >144%; outlier removed bySD | FAL.3T3.SLS.14.10.04 |
| FAL.3T3.GV.B4.04.11.04 | DF | AA61GV | 435 | 1.599 | 0.238 | 1.58% | 3 | 1 | 0.4580 | 750, 620, 512, 423, 350, 289, 239, 197 | 1.21 | YES | | 4 concentrations with values >150% | FAL.3T3.SLS.04.11.04 |
| **2-PROPANOL** | | | | | | | | | | | | | | | |
| ***IIVS*** | | | | | | | | | | | | | | | |
| A1 | RF | AA61GC | NA | NA | 0.486 | 1.76% | 0 | 8 | NA | 10000, 1000, 100, 10, 1, 0.1, 0.01, 0.001 | 10 | RF | range finder | | SLS-A1 |
| A1 with plate cover | RF | AA61GC | 4380 | 72.879 | 0.421 | 6.01% | 1 | 6 | 0.8257 | 10000, 1000, 100, 10, 1, 0.1, 0.01, 0.001 | 10 | RF | range finder | | SLS-A1 |
| B1 | DF | AA61GC | 11000 | 183.028 | 0.082 | 89.61% | 3 | 1 | 0.8759 | 100000, 62500, 39063, 24414, 15259, 9537, 5960, 3725 | 1.6 | NO | % VC difference > 15 | | SLS-B1 |
| B1 with plate cover | DF | AA61GC | 6280 | 104.493 | 0.216 | 15.53% | 4 | 1 | 0.9691 | 100000, 62500, 39063, 24414, 15259, 9537, 5960, 3725 | 1.6 | NO | % VC difference > 15 | | SLS-B1 |
| B2 | DF | AA61GC | 9620 | 160.067 | 0.098 | 87.70% | 3 | 1 | 0.9420 | 100000, 62500, 39063, 24414, 15259, 9537, 5960, 3725 | 1.6 | NO | % VC difference > 15 | | SLS-B2 |
| B2 with plate cover | DF | AA61GC | 3160 | 52.579 | 0.404 | 2.68% | 5 | 0 | 0.9710 | 100000, 62500, 39063, 24414, 15259, 9537, 5960, 3725 | 1.6 | NO | no points between 50 - 99.9% | | SLS-B2 |

# 3T3 NRU Reference Substance Data

| Experiment ID 3T3 Cells | Assay Type[1] | Substance ID | $IC_{50}$ (ug/mL) | $IC_{50}$ (mM) | Mean VC OD[2] | Difference of right/left VC from mean VC[3] | Number of Points 0 - 50 %[4] | Number of Points 50 - 100 %[5] | $R^2$ [6] | Exposure Concentrations (ug/mL)[7] | Dilution Factor[8] | Acceptable Tests[9] | Rationale for Unacceptability | Notes | PC ID |
|---|---|---|---|---|---|---|---|---|---|---|---|---|---|---|---|
| B3 | DF | AA61GC | 11200 | 186.356 | 0.223 | 61.18% | 4 | 2 | 0.8927 | 50000, 33333, 22222, 14815, 9877, 6584, 4390, 2926 | 1.5 | NO | % VC difference > 15; PC failed | | SLS-B3 |
| B3 with plate cover | DF | AA61GC | 4280 | 71.215 | 0.525 | 6.06% | 5 | 1 | 0.9764 | 50000, 33333, 22222, 14815, 9877, 6584, 4390, 2926 | 1.5 | NO | PC failed | | SLS-B3 |
| B4 | DF | AA61GC | 16600 | 276.206 | 0.230 | 22.95% | 0 | 6 | 0.6865 | 20500, 14643, 10459, 7471, 5336, 3812, 2723, 1945 | 1.4 | NO | % VC difference > 15; no points between 0.1 - 50%; low r2 | | SLS-B4 |
| B4 with plate cover | DF | AA61GC | 4690 | 78.037 | 0.418 | 15.64% | 4 | 3 | 0.9516 | 20500, 14643, 10459, 7471, 5336, 3812, 2723, 1945 | 1.4 | NO | % VC difference > 15 | | SLS-B4 |
| B5 with plate cover | DF | AA61GC | 3940 | 65.557 | 0.432 | 3.99% | 5 | 3 | 0.9607 | 20000, 14286, 10204, 7289, 5206, 3719, 2656, 1897 | 1.4 | YES | | | SLS-B5 |
| B6 with plate cover | DF | AA61GC | 4260 | 70.882 | 0.344 | 2.04% | 5 | 3 | 0.9911 | 20000, 14286, 10204, 7289, 5206, 3719, 2656, 1897 | 1.4 | YES | | | SLS-B6 |
| B7 with plate cover | DF | AA61GC | 5860 | 97.504 | 0.344 | 9.77% | 4 | 4 | 0.6186 | 20000, 14286, 10204, 7289, 5206, 3719, 2656, 1897 | 1.4 | NO | low r2; study director also rejected due to excessive well to well variability | | SLS-B7 |
| B8 with plate cover | DF | AA61GC | 4130 | 68.719 | 0.452 | 0.86% | 5 | 3 | 0.9399 | 20000, 14286, 10204, 7289, 5206, 3719, 2656, 1897 | 1.4 | YES | | | SLS-B8 |
| B8 with DYNEX plate cover - for research only | DF | AA61GC | 3210 | 53.411 | 0.347 | 1.34% | 6 | 2 | 0.9369 | 20000, 14286, 10204, 7289, 5206, 3719, 2656, 1897 | 1.4 | NO | for research; gives lower OD values than the EXCEL plate sealers | | SLS-B8 |
| ***ECBC*** | | | | | | | | | | | | | | | |
| AA61JL-A1 | RF | AA61JL | NA | NA | 0.405 | 7.48% | 0 | 0 | NA | 10000, 1000, 100, 10, 1.0, 0.1, 0.01, 0.001 | 10 | RF | no points between 10 - 90; range finder | high volatility | SLS-P1 |
| AA61JL-A2 | RF | AA61JL | NA | NA | 0.19 | 62.97% | 1 | 2 | NA | 100000, 10000, 1000, 100, 10, 1.0, 0.1, 0.01 | 10 | RF | % VC difference > 15; range finder | high volatility | SLS-P3 |
| AA61JL-B1 | DF | AA61JL | NA | NA | 0.133 | 75.92% | 3 | 2 | NA | 50000, 34014, 23139, 15740, 10707, 7284, 4955, 3370 | 1.47 | NO | PC failed; % VC difference > 15 | high volatility | SLS-P9 |
| AA61JL-B2 | DF | AA61JL | NA | NA | 0.119 | 75.18% | 4 | 1 | NA | 50000, 34014, 23139, 15740, 10707, 7284, 4955, 3370 | 1.47 | NO | PC failed; % VC difference > 15 | high volatility | SLS-P11 |
| AA61JL-B3 sealer | DF | AA61JL | NA | NA | 0.256 | 30.03 | 4 | 1 | NA | 50000, 34014, 23139, 15740, 10707, 7284, 4955, 3370 | 1.47 | NO | % VC difference > 15 | high volatility | SLS-P17 |
| AA61JL-B4 sealer | DF | AA61JL | NA | NA | 0.446 | 19.53 | 7 | 1 | NA | 34014, 23139, 15740, 10707, 7284, 4955, 3370, 2293 | 1.47 | NO | % VC difference > 15 | high volatility | SLS-P19 |
| AA61JL-B6 | DF | AA61JL | NA | NA | 0.204 | 46.32 | 0 | 4 | NA | 20000, 13605, 9255, 6296, 4283, 2914, 1982, 1348 | 1.47 | NO | % VC difference > 15; no points between 0 -50 % | | SLS-P20 |
| AA61JL-B5 sealer | DF | AA61JL | NA | NA | 0.117 | 67.16 | 5 | 2 | NA | 20000, 13605, 9255, 6296, 4283, 2914, 1982, 1348 | 1.47 | NO | % VC difference > 15 | | SLS-P20 |
| AA61JL-B7 sealer | DF | AA61JL | NA | NA | 0.475 | 15.59 | 5 | 3 | NA | 20000, 13605, 9255, 6296, 4283, 2914, 1982, 1348 | 1.47 | NO | % VC difference > 15: no r2 | | SLS-P21 |
| AA61JL-B8 sealer | DF | AA61JL | NA | NA | 0.373 | 31.51 | 5 | 2 | NA | 20000, 13605, 9255, 6296, 4283, 2914, 1982, 1348 | 1.47 | NO | % VC difference > 15 | | SLS-P21 |

# 3T3 NRU Reference Substance Data

| Experiment ID 3T3 Cells | Assay Type[1] | Substance ID | $IC_{50}$ (ug/mL) | $IC_{50}$ (mM) | Mean VC $OD^2$ | Difference of right/left VC from mean VC[3] | Number of Points 0 - 50 %[4] | Number of Points 50 - 100 %[5] | $R^2$ [6] | Exposure Concentrations (ug/mL)[7] | Dilution Factor[8] | Acceptable Tests[9] | Rationale for Unacceptability | Notes | PC ID |
|---|---|---|---|---|---|---|---|---|---|---|---|---|---|---|---|
| AA61JL-B9 sealer | DF | AA61JL | 2440 | 40.599 | 0.324 | 0.26 | 5 | 3 | 0.9415 | 15000, 10204, 6942, 4722, 3212, 2185, 1487, 1011 | 1.47 | YES | | | SLS-P22 |
| AA61JL-B10 sealer | DF | AA61JL | 2780 | 46.256 | 0.214 | 11.21 | 5 | 3 | 0.9572 | 15000, 10204, 6942, 4722, 3212, 2185, 1487, 1011 | 1.47 | YES | | | SLS-P23 |
| AA61JL-B11 sealer | DF | AA61JL | 2710 | 45.092 | 0.171 | 16.20 | 5 | 3 | 0.9661 | 15000, 10204, 6942, 4722, 3212, 2185, 1487, 1011 | 1.47 | NO | % VC difference > 15 | | SLS-P24 |
| ***FRAME*** | | | | | | | | | | | | | | | |
| A1NG190603 | RF | AA61NG | > 10,000 | NA | 0.965 | 0.22% | 0 | 8 | 0.0127 | 10000,1000, 100, 10, 1.0, 0.1, 0.01, 0.001 | 10 | RF | PC failed; no points between 10 -50%; low r2; range finder | | A1SLS190603 |
| F_L.3T3.NG.A2.26.06.03 | RF | AA61NG | 11700 | 194.676 | 0.251 | 42.34% | 0 | 2 | 0.7469 | 100000,10000,1000, 100, 10, 1.0, 0.1, 0.01 | 10 | RF | VC difference greater than 15%; no points between 10 - 50; r2 too low; range finder | | FAL.3T3.SLS.A2.26.06.03 |
| FAL.3T3.NG.B1.03.07.03 | DF | AA61NG | 92500 | 1539.101 | 0.404 | 12.52% | 0 | 2 | 0.5706 | 50000, 23256, 10817, 3031, 2340, 1088, 506, 235 | 2.15 | NO | no points between 10 - 50; r2 too low | | FAL.3T3.SLS.B1.03.07.03 |
| FAL.3T3.B2.NG.10.07.03 | DF | AA61NG | NA | NA | 0.157 | 56.97% | NA | NA | NA | 100000, 68027, 46277, 31481, 21416, 14568, 9911, 6742 | 1.47 | NO | % VC difference > 15; range finder | high volatility | FAL.3T3.SLS.10.07.03 |
| FAL.3T3.NG.B3.120903 | DF | AA61NG | 34900 | 580.699 | 0.251 | 42.34 | 0 | 2 | 0.7468 | 50000, 34014, 23139, 15741, 10708, 7284, 4955, 3371 | 1.47 | NO | No points between 0 & 50%viability; low r2; %VC difference > 15 | | FAL.3T3.SLS.120903 |
| FAL.3T3.NG.B5.180903 plate sealer | DF | AA61NG | 3900 | 64.892 | 0.417 | 3.46 | 4 | 1 | 0.9517 | 50000, 34014, 23139, 15741, 10708, 7284, 4955, 3371 | 1.47 | YES | | | FAL.3T3.SLS.180903 |
| FAL.3T3.NG.B5.180903 mineral oil | DF | AA61NG | 5940 | 98.835 | 0.366 | 8.45 | 5 | 2 | 0.9380 | 50000, 34014, 23139, 15741, 10708, 7284, 4955, 3371 | 1.47 | NO | Mineral oil | | FAL.3T3.SLS.180903 |
| FAL.3T3.NG.B6.190903 plate sealer | DF | AA61NG | 4570 | 76.040 | 0.258 | 17.26 | 5 | 1 | 0.8993 | 50000, 34014, 23139, 15741, 10708, 7284, 4955, 3371 | 1.47 | NO | %VC difference > 15 | | FAL.3T3.SLS.190903 |
| FAL.3T3.NG.B6.190903 mineral oil | DF | AA61NG | 4740 | 78.869 | 0.384 | 7.46 | 5 | 2 | 0.9301 | 50000, 34014, 23139, 15741, 10708, 7284, 4955, 3371 | 1.47 | NO | Mineral oil | | FAL.3T3.SLS.190903 |
| FAL.3T3.NG.B7.25.09.03 plate sealer | DF | AA61NG | 4130 | 68.719 | 0.347 | 10.58 | 3 | 4 | 0.9244 | 20000, 13605, 9255, 6296, 4283, 2914, 1982, 1348 | 1.47 | YES | | | FAL.3T3.SLS.250903 |
| FAL.3T3.NG.B8.25.09.03 mineral oil | DF | AA61NG | 4220 | 70.216 | 0.361 | 7.83 | 4 | 4 | 0.9513 | 20000, 13605, 9255, 6296, 4283, 2914, 1982, 1348 | 1.47 | NO | Mineral oil | | FAL.3T3.SLS.250903 |
| FAL.3T3.NG.B8-03-10-03 plate sealer | DF | AA61NG | 3880 | 64.559 | 0.510 | 2.39 | 5 | 3 | 0.9519 | 20000, 13605, 9255, 6296, 4283, 2914, 1982, 1348 | 1.47 | YES | | | FAL.3T3.SLS.031003 |

## PROPRANOLOL

| | | | | | | | | | | | | | | | |
|---|---|---|---|---|---|---|---|---|---|---|---|---|---|---|---|
| ***IIVS*** | | | | | | | | | | | | | | | |
| A1 Preliminary | RF | AA61GU | 19.3 | 0.065 | 0.320 | 5.15% | 0 | 1 | 0.9764 | 1000, 100, 10, 1, 0.1, 0.01, 0.001, 0.0001 | 10 | RF | range finder | | SLS-A1 |
| B1 | DF | AA61GU | 21.1 | 0.071 | 0.384 | 7.68% | 1 | 1 | 0.9906 | 1000, 559.5, 313.0, 175.0, 98.0, 54.5, 30.6, 17.0 [IIVS retested; used wrong dilution scheme] | 1.79 | YES | | | SLS-B1 |
| B2 | DF | AA61GU | 19.7 | 0.067 | 0.386 | 4.75% | 0 | 1 | 0.9834 | 100, 56.2, 31.6, 17.8, 10.0, 5.63, 3.16, 1.78 | 1.78 | NO | No points between 10 and 50% | | SLS-B2 |

# 3T3 NRU Reference Substance Data

| Experiment ID 3T3 Cells | Assay Type[1] | Substance ID | $IC_{50}$ (ug/mL) | $IC_{50}$ (mM) | Mean VC OD[2] | Difference of right/left VC from mean VC[3] | Number of Points 0 - 50 %[4] | Number of Points 50 - 100 %[5] | $R^2$ [6] | Exposure Concentrations (ug/mL)[7] | Dilution Factor[8] | Acceptable Tests[9] | Rationale for Unacceptability | Notes | PC ID |
|---|---|---|---|---|---|---|---|---|---|---|---|---|---|---|---|
| B3 | DF | AA61GU | 13.6 | 0.046 | 0.484 | 4.31% | 1 | 4 | 0.9443 | 100, 56.2, 31.6, 17.8, 10.0, 5.63, 3.16, 1.78 | 1.78 | YES | | | SLS-B3 |
| B4 | DF | AA61GU | 18.3 | 0.062 | 0.444 | 0.43% | 1 | 3 | 0.9816 | 100, 56.2, 31.6, 17.8, 10.0, 5.63, 3.16, 1.78 | 1.78 | NO | PC failed | | SLS-B4 |
| B5 | DF | AA61GU | 18.2 | 0.062 | 0.319 | 0.94% | 1 | 2 | 0.9927 | 100, 56.2, 31.6, 17.8, 10.0, 5.63, 3.16, 1.78 | 1.78 | YES | | | SLS-B5 |
| ***ECBC*** | | | | | | | | | | | | | | | |
| ECBC-3T3-lb-01 AA61KH-A1 | RF | AA61KH | 17.5 | 0.059 | 0.279 | 6.15% | 0 | 1 | 0.8598 | 1000, 100, 10, 1, 0.1, 0.01, 0.001, 0.0001 | 10 | RF | range finder | | SLS-P1 |
| ECBC-3T3-lb-02 AA61KH-B1 | DF | AA61KH | 11.4 | 0.039 | 0.204 | 1.02% | 2 | 2 | 0.9384 | 100, 68, 46.3, 31.5, 21.4, 14.6, 9.9, 6.7 | 1.47 | NO | PC failed | | SLS-P3 |
| ECBC-3T3-lb-03 AA61KH-B2 | DF | AA61KH | 16.2 | 0.055 | 0.249 | 4.55% | 1 | 2 | 0.9601 | 100, 68, 46.3, 31.5, 21.4, 14.6, 9.9, 6.7 | 1.47 | NO | PC failed | | SLS-P4 |
| ECBC-3T3-lb-04 AA61KH-B3 | DF | AA61KH | 12.2 | 0.041 | 0.476 | 16.18% | 2 | 4 | 0.8629 | 50, 34, 23.1, 15.7, 10.7, 7.3, 5.0, 3.4 | 1.47 | NO | VC difference > 15% | | SLS-P5 |
| ECBC-3T3-lb-05 AA61KH-B4 | DF | AA61KH | 11.3 | 0.038 | 0.297 | 4.17% | 2 | 4 | 0.9493 | 50, 34, 23.1, 15.7, 10.7, 7.3, 5.0, 3.4 | 1.47 | YES | | | SLS-P7 |
| ECBC-3T3-lb-06 AA61KH-B5 | DF | AA61KH | 8.90 | 0.030 | 0.474 | 9.70% | 2 | 3 | 0.8932 | 50, 34, 23.1, 15.7, 10.7, 7.3, 5.0, 3.4 | 1.47 | YES | | | SLS-P9 |
| ECBC-3T3-lb-07 AA61KH-B6 | DF | AA61KH | 18.7 | 0.063 | 0.306 | 3.70% | 2 | 2 | 0.9475 | 50, 34, 23.1, 15.7, 10.7, 7.3, 5.0, 3.4 | 1.47 | YES | | | SLS-P12 |
| ECBC-3T3-lb-08 AA61KH-B7 | DF | AA61KH | 15.6 | 0.053 | 0.311 | 11.73% | 2 | 2 | 0.9549 | 50, 34, 23.1, 15.7, 10.7, 7.3, 5.0, 3.4 | 1.47 | YES | | | SLS-P13 |
| ***FRAME*** | | | | | | | | | | | | | | | |
| A1 1b3T3RF01FALNM | RF | AA61NM | 57.7 | 0.195 | 0.413 | 12.84% | 0 | 0 | 0.9454 | 1000, 100, 10, 1, 0.1, 0.01, 0.001, 0.0001 | 10 | RF | range finder | | 1b3T3CRTFALSLS 12/4/02 |
| A2 1b3T3RF02FALNM | RF | AA61NM | 0.022 | 0.000 | 0.479 | 8.47% | 1 | 3 | 0.9694 | 1000, 100, 10, 1, 0.1, 0.01, 0.001, 0.0001 | 10 | RF | range finder | | 1b3T3CRTFALSLS 12/10/02 |
| 1b3T3DF02FALNM | DF | AA61NM | 19.8 | 0.067 | 0.350 | 6.58% | 1 | 3 | 0.8123 | 35, 23.81, 16.20, 11.02, 7.50, 5.10, 3.47, 2.36 | 1.47 | NO | PC failed | | 1b3T3CRTFALSLS 12/17/02 |
| 1b3T3DF02FALNM | DF | AA61NM | 23.1 | 0.078 | 0.477 | 10.31% | 1 | 1 | 0.8691 | 35, 23.81, 16.20, 11.02, 7.50, 5.10, 3.47, 2.36 | 1.47 | YES | | NR crystals in plate | 1b3T3CRTFALSLS 1/7/03 |
| 1b3T3DF02FALNM | DF | AA61NM | 23.9 | 0.081 | 0.220 | 13.61% | 0 | 2 | 0.8821 | 35, 23.81, 16.20, 11.02, 7.50, 5.10, 3.47, 2.36 | 1.47 | NO | NR crystals in plate; stopped after 1 h; no point between 10 & 50% viability; PC failed | | 1b3T3CRTFALSLS 1/8/03 |
| 1b3T3DF05FALNM | DF | AA61NM | 13.8 | 0.047 | 0.449 | 8.47% | 1 | 3 | 0.9401 | 35.000, 23.810, 16.197, 11.018, 7.495, 5.099, 3.469, 2.360 | 1.47 | YES | | | 1b3T3CRTFALSLS 1/14/03 |
| 1b3T3DF06FALNM | DF | AA61NM | 33.3 | 0.113 | 0.300 | 11.67% | 1 | 2 | 0.8052 | 35, 23.81, 16.20, 11.02, 7.50, 5.10, 3.47, 2.36 | 1.47 | NO | PC failed | | 1b3T3CRTFALSLS 1/15/03 |
| 1b3T3DF07FALNM | DF | AA61NM | 8.80 | 0.030 | 0.538 | 9.69% | 1 | 5 | 0.9020 | 35, 23.81, 16.20, 11.02, 7.50, 5.10, 3.47, 2.36 | 1.47 | YES | | | 1b3T3CRTFALSLS 1/21/03 |
| 1b3T3DF08FALNM A2650 | DF | AA61NM | 15.2 | 0.051 | 0.223 | 5.91% | 1 | 4 | 0.8979 | 35, 23.81, 16.20, 11.02, 7.50, 5.10, 3.47, 2.36 | 1.47 | NO | NR crystals in plate; stopped after 1 h; PC failed | | 1b3T3CRTFALSLS 1/28/03 |
| 1b3T3DF09FALNM | DF | AA61NM | 22.2 | 0.075 | 0.582 | 4.98% | 1 | 0 | 0.9438 | 35.000, 23.810, 16.197, 11.018, 7.495, 5.099, 3.469, 2.360 | 1.47 | NO | No points between 50 & 90% viability | | 1b3T3CRTFALSLS 2/4/03 |
| 1b3T3DF10FALNM | DF | AA61NM | 8.36 | 0.028 | 0.426 | 12.59% | 4 | 3 | 0.8917 | 35.000, 23.810, 16.197, 11.018, 7.495, 5.099, 3.469, 2.360 | 1.47 | YES | | | 1b3T3CRTFALSLS 2/5/03 |
| 1b3T3DF11FALNM | DF | AA61NM | 18.5 | 0.063 | 0.227 | 13.72% | 1 | 4 | 0.6461 | 35, 23.81, 16.20, 11.02, 7.50, 5.10, 3.47, 2.36 | 1.47 | NO | r2< 0.8 | Nonmonotonic curve. | 1b3T3CRTFALSLS 2/26/03 |

## PROPYLPARABEN

| | | | | | | | | | | | | | | | |
|---|---|---|---|---|---|---|---|---|---|---|---|---|---|---|---|
| ***IIVS*** | | | | | | | | | | | | | | | |
| A1 | RF | AA61PX | 19.4 | 0.108 | 0.451 | 0.06% | 1 | 2 | 0.9659 | 1000, 100, 10, 1, 0.1, 0.01, 0.001, 0.0001 | 10 | RF | range finder | ppt in 2X C1 | SLS-A2 |

# 3T3 NRU Reference Substance Data

| Experiment ID 3T3 Cells | Assay Type[1] | Substance ID | $IC_{50}$ (ug/mL) | $IC_{50}$ (mM) | Mean VC OD[2] | Difference of right/left VC from mean VC[3] | Number of Points 0 - 50 %[4] | Number of Points 50 - 100 %[5] | $R^2$ [6] | Exposure Concentrations (ug/mL)[7] | Dilution Factor[8] | Acceptable Tests[9] | Rationale for Unacceptability | Notes | PC ID |
|---|---|---|---|---|---|---|---|---|---|---|---|---|---|---|---|
| B1 | DF | AA61PX | 19.2 | 0.106 | 0.445 | 3.97% | 3 | 4 | 0.9395 | 100, 62.5, 39.1, 24.4, 15.3, 9.54, 5.96, 3.73 | 1.6 | YES | | C8 removed from PRISM by SD due to the upswing of the response curve at that conc. | SLS-B5 |
| B2 | DF | AA61PX | 17.0 | 0.094 | 0.354 | 9.68% | 4 | 4 | 0.9707 | 100, 62.5, 39.1, 24.4, 15.3, 9.54, 5.96, 3.73 | 1.6 | YES | | | SLS-B9 |
| B3 | DF | AA61PX | 15.0 | 0.083 | 0.368 | 7.51% | 4 | 4 | 0.9675 | 100, 62.5, 39.1, 24.4, 15.3, 9.54, 5.96, 3.73 | 1.6 | YES | | | SLS-B10 |
| ***ECBC*** | | | | | | | | | | | | | | | |
| AA61PK-A1 | RF | AA61PK | 22.9 | 0.127 | 0.231 | 2.13% | 1 | 2 | 0.9271 | 1000, 100, 10, 1, 0.1, 0.01, 0.001, 0.0001 | 10 | RF | range finder | ppt in 2X C1 | SLS-P7 |
| AA61PK-B1 | DF | AA61PK | 18.2 | 0.101 | 0.561 | 6.97% | 4 | 4 | 0.9538 | 215, 100, 46.5, 21.6, 10.1, 4.68, 2.18, 1.01 | 2.15 | YES | | | SLS-P26 |
| AA61PK-B2 | DF | AA61PK | 19.8 | 0.110 | 0.543 | 6.49% | 4 | 4 | 0.9827 | 215, 100, 46.5, 21.6, 10.1, 4.68, 2.18, 1.01 | 2.15 | YES | | | SLS-P28 |
| AA61PK-B3 | DF | AA61PK | 21.8 | 0.121 | 0.367 | 17.33% | 3 | 5 | 0.9431 | 215, 100, 46.5, 21.6, 10.1, 4.68, 2.18, 1.01 | 2.15 | NO | % VC difference > 15 | | SLS-P30 |
| AA61PK-B4 | DF | AA61PK | 24.6 | 0.137 | 0.341 | 7.63% | 2 | 5 | 0.9812 | 215, 100, 46.5, 21.6, 10.1, 4.68, 2.18, 1.01 | 2.15 | YES | | | SLS-P32 |
| ***FRAME*** | | | | | | | | | | | | | | | |
| FAL.3T3.HT.A1.01/04/04 | RF | AA61HT | 73.5 | 0.408 | 0.229 | 5.88% | 2 | 1 | 0.8795 | 1000, 100, 10, 1, 0.1, 0.01, 0.001, 0.0001 | 10 | RF | range finder | ppt in 2X C1-C2 | FAL.3T3.SLS.01/04/04 |
| FAL.3T3.HT.B1.29/04/04 | DF | AA61HT | 41.3 | 0.229 | 0.193 | 7.55% | 1 | 4 | 0.7787 | 1000, 465, 216, 101, 46.8, 21.8, 10.1, 4.7 | 2.15 | YES | | NR crystals; high background | FAL.3T3.SLS.29/04/04 |
| FAL.3T3.HT.B2.07/05/04 | DF | AA61HT | 45.3 | 0.251 | 0.278 | 8.04% | 4 | 2 | 0.9762 | 500, 233, 108, 50.3, 23.4, 10.9, 5.1, 2.4 | 2.15 | YES | | | FAL.3T3.SLS.07/05/04 |
| FAL.3T3.HT.B3.20/05/04 | DF | AA61HT | 68.7 | 0.381 | 0.332 | 10.50% | 3 | 3 | 0.9633 | 500, 233, 108, 50.3, 23.4, 10.9, 5.1, 2.4 | 2.15 | YES | | | FAL.3T3.SLS.20/05/04 |

## SODIUM ARSENITE

| | | | | | | | | | | | | | | | |
|---|---|---|---|---|---|---|---|---|---|---|---|---|---|---|---|
| ***IIVS*** | | | | | | | | | | | | | | | |
| A1 | RF | AA61MV | 0.454 | 0.003 | 0.368 | 14.66% | 2 | 3 | 0.9583 | 10000, 1000, 100, 10, 1, 0.1, 0.01, 0.001 | 10 | RF | range finder | | SLS-A5 |
| B1 | DF | AA61MV | 0.745 | 0.006 | 0.418 | 11.53% | 3 | 3 | 0.9754 | 3.00, 2.00, 1.33, 0.889, 0.593, 0.395, 0.263, 0.176 | 1.5 | YES | | SD removed 7 data points from PRISM analysis; considered them outliers even though EXCEL macros did not identify as such | SLS-B4 |
| B2 | DF | AA61MV | 0.755 | 0.006 | 0.414 | 5.16% | 3 | 4 | 0.9674 | 3.00, 2.00, 1.33, 0.889, 0.593, 0.395, 0.263, 0.176 | 1.5 | YES | | | SLS-B7 |
| B3 | DF | AA61MV | 0.548 | 0.004 | 0.464 | 4.40% | 4 | 4 | 0.9506 | 3.00, 2.00, 1.33, 0.889, 0.593, 0.395, 0.263, 0.176 | 1.5 | YES | | | SLS-B8 |
| ***ECBC*** | | | | | | | | | | | | | | | |
| AA61KA-A1 | RF | AA61KA | 0.483 | 0.004 | 0.506 | 2.78% | 3 | 3 | 0.9940 | 10000, 1000, 100, 10, 1, 0.1, 0.01, 0.001 | 10 | RF | range finder | | SLS-16 |
| AA61KA-B1 | DF | AA61KA | 0.482 | 0.004 | 0.565 | 4.68% | 4 | 4 | 0.9795 | 10.0, 4.65, 2.16, 1.01, 0.468, 0.218, 0.101, 0.047 | 2.15 | YES | | | SLS-P41 |
| AA61KA-B2 | DF | AA61KA | 0.528 | 0.004 | 0.739 | 1.30% | 2 | 4 | 0.9661 | 10.0, 4.65, 2.16, 1.01, 0.468, 0.218, 0.101, 0.047 | 2.15 | YES | | | SLS-P43 |
| AA61KA-B3 | DF | AA61KA | 0.477 | 0.004 | 0.617 | 1.99% | 2 | 4 | 0.9795 | 10.0, 4.65, 2.16, 1.01, 0.468, 0.218, 0.101, 0.047 | 2.15 | YES | | | SLS-P43 |
| ***FRAME*** | | | | | | | | | | | | | | | |
| FAL.3T3.GS.A1.21.10.04 | RF | AA61GS | 1.11 | 0.009 | 0.254 | 4.69% | 0 | 3 | 0.9858 | 10000, 1000, 100, 10, 1.0, 0.1, 0.01, 0.001 | 10 | RF | range finder; no points between 0-50% | ppt in 2X C1 | FAL.3T3.SLS.21.10.04 |

# 3T3 NRU Reference Substance Data

| Experiment ID 3T3 Cells | Assay Type[1] | Substance ID | $IC_{50}$ (ug/mL) | $IC_{50}$ (mM) | Mean VC OD[2] | Difference of right/left VC from mean VC[3] | Number of Points 0 - 50 %[4] | Number of Points 50 - 100 %[5] | $R^2$ [6] | Exposure Concentrations (ug/mL)[7] | Dilution Factor[8] | Acceptable Tests[9] | Rationale for Unacceptability | Notes | PC ID |
|---|---|---|---|---|---|---|---|---|---|---|---|---|---|---|---|
| FAL.3T3.GS.B1.11.11.04 | DF | AA61GS | 0.678 | 0.005 | 0.731 | 1.75% | 8 | 0 | 0.9745 | 10.0, 6.80, 4.63, 3.15, 2.14, 1.46, 0.99, 0.67 | 1.47 | NO | no points between 50-100% | ppt in 1X C1-C8 | FAL.3T3.SLS.10.11.04 |
| FAL.3T3.GS.B2.25.11.04 | DF | AA61GS | 0.872 | 0.007 | 0.381 | 2.01% | 3 | 1 | 0.9740 | 10.0, 4.65, 2.16, 1.01, 0.468, 0.218, 0.101, 0.047 | 2.15 | YES | | | FAL.3T3.SLS.25.11.04 |
| FAL.3T3.GS.B3.26.11.04 | DF | AA61GS | 1.07 | 0.008 | 0.299 | 7.88% | 1 | 2 | 0.9795 | 10.0, 4.65, 2.16, 1.01, 0.468, 0.218, 0.101, 0.047 | 2.15 | YES | | outliers removed bySD | FAL.3T3.SLS.26.11.04 |
| FAL.3T3.GS.B4.02.12.04 | DF | AA61GS | 2.38 | 0.018 | 0.232 | 12.64% | 2 | 2 | 0.9073 | 10.0, 4.65, 2.16, 1.01, 0.468, 0.218, 0.101, 0.047 | 2.15 | YES | | | FAL.3T3.SLS.02.12.04 (SW) |

## SODIUM CHLORIDE

| | | | | | | | | | | | | | | | |
|---|---|---|---|---|---|---|---|---|---|---|---|---|---|---|---|
| ***IIVS*** | | | | | | | | | | | | | | | |
| A1 | RF | AA61PE | 3400 | 58.249 | 0.474 | 1.86% | 1 | 6 | 0.9680 | 10000, 1000, 100, 10, 1, 0.1, 0.01, 0.001 | 10 | RF | range finder | | SLS-A3 |
| B1 | DF | AA61PE | 5160 | 88.367 | 0.496 | 1.02% | 2 | 6 | 0.9548 | 10000, 7143, 5102, 3644, 2603, 1859, 1328, 949 | 1.4 | YES | | | SLS-B4 |
| B2 | DF | AA61PE | 5120 | 87.557 | 0.391 | 6.63% | 3 | 3 | 0.9651 | 20000, 13333, 8889, 5926, 3951, 2634, 1756, 1171 | 1.5 | YES | | | SLS-B7 |
| B3 | DF | AA61PE | 4350 | 74.352 | 0.450 | 5.91% | 2 | 4 | 0.9484 | 20000, 13333, 8889, 5926, 3951, 2634, 1756, 1171 | 1.5 | YES | | | SLS-B8 |
| ***ECBC*** | | | | | | | | | | | | | | | |
| AA61JW-A1 | RF | AA61JW | 4140 | 70.842 | 0.365 | 0.96% | 1 | 6 | 0.9393 | 10000,1000, 100, 10, 1,0.1, 0.01, 0.001 | 10 | RF | range finder | | SLS-11 |
| AA61JW-B1 | DF | AA61JW | 5050 | 86.355 | 0.538 | 7.42% | 2 | 6 | 0.9446 | 10000, 6803, 4628, 3148, 2142, 1457, 991, 674 | 1.47 | YES | | | SLS-27 |
| AA61JW-B2 | DF | AA61JW | 4720 | 80.777 | 0.449 | 8.39% | 2 | 6 | 0.9401 | 10000, 6803, 4628, 3148, 2142, 1457, 991, 674 | 1.47 | YES | | | SLS-29 |
| AA61JW-B3 | DF | AA61JW | 4600 | 78.757 | 0.519 | 5.06% | 2 | 6 | 0.9369 | 10000, 6803, 4628, 3148, 2142, 1457, 991, 674 | 1.47 | YES | | | SLS-P31 |
| ***FRAME*** | | | | | | | | | | | | | | | |
| FAL.3T3.FM.A1.21.05.04 | RF | AA61FM | 3540 | 60.574 | 0.396 | 0.86% | 1 | 4 | 0.9371 | 10000, 1000, 100, 10, 1, 0.1, 0.01, 0.001 | 10 | RF | range finder | | FAL.3T3.SLS.21.05.04 |
| FAL.3T3.FM.B1.04.06.04 | DF | AA61FM | 3010 | 51.557 | 0.452 | 18.08% | 2 | 3 | 0.8138 | 20000, 9302, 4327, 2012, 936, 435, 202, 94.2 | 2.15 | NO | % VC difference > 15 | | FAL.3T3.SLS.04.06.04 |
| FAL.3T3.FM.B2.17.06.04 | DF | AA61FM | 4500 | 76.964 | 0.538 | 0.15% | 2 | 6 | 0.9728 | 20000, 9302, 4327, 2012, 936, 435, 202, 94.2 | 2.15 | YES | | | FAL.3T3.SLS.17.06.04 |
| FAL.3T3.FM.B3.08.07.04 | DF | AA61FM | 4010 | 68.595 | 0.322 | 7.57% | 2 | 4 | 0.9618 | 20000, 9302, 4327, 2012, 936, 435, 202, 94.2 | 2.15 | YES | | | FAL.3T3.SLS.08.07.04 |
| FAL.3T3.FM.B4.09.07.04 | DF | AA61FM | 4520 | 77.320 | 0.384 | 3.06% | 2 | 3 | 0.7556 | 20000, 9302, 4327, 2012, 936, 435, 202, 94.2 | 2.15 | YES | | | FAL.3T3.SLS.09.07.04 |
| FAL.3T3.FM.B5.16.07.04 | DF | AA61FM | 5470 | 93.603 | 0.399 | 4.36% | 1 | 3 | 0.9361 | 20000, 9302, 4327, 2012, 936, 435, 202, 94.2 | 2.15 | YES | | | FAL.3T3.SLS.16.07.04 |

# 3T3 NRU Reference Substance Data

| Experiment ID 3T3 Cells | Assay Type[1] | Substance ID | $IC_{50}$ (ug/mL) | $IC_{50}$ (mM) | Mean VC OD[2] | Difference of right/left VC from mean VC[3] | Number of Points 0 - 50 %[4] | Number of Points 50 - 100 %[5] | $R^2$ [6] | Exposure Concentrations (ug/mL)[7] | Dilution Factor[8] | Acceptable Tests[9] | Rationale for Unacceptability | Notes | PC ID |
|---|---|---|---|---|---|---|---|---|---|---|---|---|---|---|---|
| **SODIUM DICHROMATE DIHYDRATE** | | | | | | | | | | | | | | | |
| ***IIVS*** | | | | | | | | | | | | | | | |
| A1 | RF | AA61FP | 0.642 | 0.002 | 0.380 | 5.57% | 1 | 1 | 0.9860 | 10000, 1000, 100, 10, 1, 0.1, 0.01, 0.001 | 10 | RF | range finder | | SLS-A4 |
| B1 | DF | AA61FP | 0.548 | 0.002 | 0.502 | 2.42% | 5 | 3 | 0.9910 | 3.00, 2.00, 1.33, 0.889, 0.593, 0.395, 0.263, 0.176 | 1.5 | YES | | | SLS-B4 |
| B2 | DF | AA61FP | 0.527 | 0.002 | 0.435 | 0.54% | 4 | 4 | 0.9751 | 2.47, 1.65, 1.10, 0.733, 0.489, 0.326, 0.217, 0.145 | 1.5 | YES | | | SLS-B7 |
| B3 | DF | AA61FP | 0.455 | 0.002 | 0.449 | 3.30% | 5 | 3 | 0.9931 | 3.00, 2.00, 1.33, 0.889, 0.593, 0.395, 0.263, 0.176 | 1.5 | YES | | | SLS-B8 |
| ***ECBC*** | | | | | | | | | | | | | | | |
| AA61NT-A1 | RF | AA61NT | 0.561 | 0.002 | 0.291 | 2.92% | 2 | 1 | 0.9850 | 10000,1000, 100, 10, 1,0.1, 0.01, 0.001 | 10 | RF | range finder | | SLS-P12 |
| AA61NT-B1 | DF | AA61NT | 0.555 | 0.002 | 0.438 | 5.78% | 4 | 4 | 0.9835 | 6.00, 2.79, 1.30, 0.604, 0.281, 0.131, 0.061, 0.028 | 2.15 | YES | | | SLS-P32 |
| AA61NT-B2 | DF | AA61NT | 0.550 | 0.002 | 0.409 | 9.10% | 4 | 4 | 0.9713 | 6.00, 2.79, 1.30, 0.604, 0.281, 0.131, 0.061, 0.028 | 2.15 | YES | | | SLS-P34 |
| AA61NT-B3 | DF | AA61NT | 0.703 | 0.002 | 0.654 | 1.90% | 3 | 5 | 0.9871 | 6.00, 2.79, 1.30, 0.604, 0.281, 0.131, 0.061, 0.028 | 2.15 | YES | | | SLS-P36 |
| ***FRAME*** | | | | | | | | | | | | | | | |
| FAL.3T3.HK.A1.10.09.04 | RF | AA61HK | 0.871 | 0.003 | 0.496 | 11.79% | 5 | 0 | 0.9710 | 10000, 1000, 100, 10, 1, 0.1, 0.01, 0.001 | 10 | RF | range finder; no points between 50 - 100% | | FAL.3T3.SLS.10.09.04 |
| FAL.3T3.HK.B1.16.09.04 | DF | AA61HK | NA | NA | 0.343 | 4.69% | 0 | 0 | NA | 10.0, 4.7, 2.2, 1.0, 0.5, 0.2, 0.101, 0.047 | 2.15 | NO | no points between 0 - 100% | | FAL.3T3.SLS.16.09.04 |
| FAL.3T3.HK.B2.23.09.04 | DF | AA61HK | 0.388 | 0.001 | 0.367 | 3.41% | 2 | 1 | 0.9713 | 1.00, 0.680, 0.463, 0.315, 0.214, 0.146, 0.099, 0.067 | 1.47 | YES | | | FAL.3T3.SLS.23.09.04 |
| FAL.3T3.HK.B3.14.10.0404 | DF | AA61HK | 0.864 | 0.003 | 0.340 | 3.67% | 1 | 7 | 0.9167 | 1.00, 0.752, 0.565, 0.425, 0.320, 0.240, 0.181, 0.136 | 1.33 | YES | | | FAL.3T3.SLS.14.10.04 |
| FAL.3T3.HK.B4.04.11.04 | DF | AA61HK | 0.719 | 0.002 | 0.265 | 8.67% | 2 | 3 | 0.7857 | 1.00, 0.752, 0.565, 0.425, 0.320, 0.240, 0.181, 0.136 | 1.33 | YES | | | FAL.3T3.SLS.04.11.04 |
| **SODIUM I FLUORIDE** | | | | | | | | | | | | | | | |
| ***IIVS*** | | | | | | | | | | | | | | | |
| A1 | RF | AA61HF | 59.2 | 1.410 | 0.526 | 0.64% | 1 | 3 | 0.9854 | 10000, 1000, 100, 10, 1, 0.1, 0.01, 0.001 | 10 | RF | range finder | | SLS-A1 |
| B1 | DF | AA61HF | 86.7 | 2.065 | 0.391 | 0.28% | 2 | 4 | 0.9788 | 1000, 556, 309, 171, 95.3, 52.9, 29.4, 16.3 | 1.8 | YES | | | SLS-B1 |
| B2 | DF | AA61HF | 75.5 | 1.798 | 0.512 | 5.46% | 3 | 3 | 0.9857 | 1000, 556, 309, 171, 95.3, 52.9, 29.4, 16.3 | 1.8 | YES | | | SLS-B2 |
| B3 | DF | AA61HF | 71.4 | 1.700 | 0.541 | 9.13% | 2 | 2 | 0.9894 | 1000, 556, 309, 171, 95.3, 52.9, 29.4, 16.3 | 1.8 | NO | PC failed | | SLS-B3 |
| B4 | DF | AA61HF | 83.8 | 1.996 | 0.465 | 2.42% | 3 | 3 | 0.9676 | 1000, 556, 309, 171, 95.3, 52.9, 29.4, 16.3 | 1.8 | YES | | | SLS-B4 |
| ***ECBC*** | | | | | | | | | | | | | | | |
| AA61MG-A1 | RF | AA61MG | 61.7 | 1.469 | 0.361 | 7.05% | 0 | 0 | 0.9569 | 10000, 1000, 100, 10, 1.0, 0.1, 0.01, 0.001 | 10 | RF | PC failed; no points between 10 - 90%; range finder | | SLS-P2 |

# 3T3 NRU Reference Substance Data

| Experiment ID 3T3 Cells | Assay Type[1] | Substance ID | $IC_{50}$ (ug/mL) | $IC_{50}$ (mM) | Mean VC OD[2] | Difference of right/left VC from mean VC[3] | Number of Points 0 - 50 %[4] | Number of Points 50 - 100 %[5] | $R^2$ [6] | Exposure Concentrations (ug/mL)[7] | Dilution Factor[8] | Acceptable Tests[9] | Rationale for Unacceptability | Notes | PC ID |
|---|---|---|---|---|---|---|---|---|---|---|---|---|---|---|---|
| AA61MG-B1 | DF | AA61MG | 59.7 | 1.422 | 0.597 | 4.34% | 1 | 2 | 0.9567 | 200, 136.1, 92.6, 63.0, 42.8, 29.1, 19.8, 13.5 | 1.47 | YES | | | SLS-P6 |
| AA61MG-B2 | DF | AA61MG | 56.8 | 1.353 | 0.566 | 1.90% | 3 | 4 | 0.9553 | 100, 82.6, 68.3, 56.4, 46.7, 38.6, 31.9, 26.3 | 1.21 | YES | | | SLS-P7 |
| AA61MG-B3 | DF | AA61MG | 67.5 | 1.608 | 0.522 | 6.32% | 3 | 2 | 0.9336 | 100, 82.6, 68.3, 56.4, 46.7, 38.6, 31.9, 26.3 | 1.21 | YES | | | SLS-P10 |
| ***FRAME*** | | | | | | | | | | | | | | | |
| FAL.3T3.A1.RH.200603 | RF | AA61RH | 208 | 4.954 | 0.716 | 0.48% | 1 | 0 | 0.9733 | 10000,1000, 100, 10, 1.0, 0.1, 0.01, 0.001 | 10 | RF | no points between 50 - 90%; range finder | | FAL.3T3.SLS2.A1.200603 |
| FAL.3T3.B1.RH.27.06.03 | DF | AA61RH | 102 | 2.429 | 0.425 | 2.23% | 2 | 1 | 0.9119 | 150, 102.0, 69.4, 47.2, 32.1, 21.8, 14.9, 10.1 | 1.47 | YES | | | FAL.3T3.SLS.A2.27.06.03 |
| FAL.3T3.B2.RH.04.07.03 | DF | AA61RH | 85.9 | 2.046 | 0.568 | 0.12% | 2 | 1 | 0.9438 | 300, 204, 139, 94.4, 64.2, 43.7, 29.7, 20.2 | 1.47 | NO | PC failed | | FAL.3T3.SLS.04.07.03 |
| FAL.3T3.B3.RH.11.07.03 | DF | AA61RH | 76.0 | 1.810 | 0.575 | 3.23% | 2 | 1 | 0.9762 | 300, 204, 139, 94.4, 64.2, 43.7, 29.7, 20.2 | 1.47 | YES | | | FAL.3T3.SLS.11.07.03 |
| FAL.3T3.B4.RH.18.07.03 | DF | AA61RH | 110 | 2.620 | 0.552 | 4.70% | 2 | 1 | 0.9301 | 300, 204, 139, 94.4, 64.2, 43.7, 29.7, 20.2 | 1.47 | YES | | | FAL.3T3.SLS.18.07.03 |

## SODIUM HYPOCHLORITE

| | | | | | | | | | | | | | | | |
|---|---|---|---|---|---|---|---|---|---|---|---|---|---|---|---|
| ***IIVS*** | | | | | | | | | | | | | | | |
| A1 | RF | AA61RD | 310 | 4.171 | 0.414 | 28.60% | 1 | 4 | 0.9878 | 10000, 1000, 100, 10, 1, 0.1, 0.01, 0.001 | 10 | RF | range finder | VC1 ODs < VC2 ODs; VC1 removed from subsequent analysis; volatility issues. | SLS-A1 |
| B1 | DF | AA61RD | NA | NA | 0.464 | 1.53% | 0 | 5 | NA | 1000, 667, 444, 296, 198, 132, 87.8, 58.5 | 1.5 | NO | no points between 0 - 50% | | SLS-B4 |
| B1 (should be B2) | DF | AA61RD | 1110 | 14.866 | 0.425 | 2.24% | 2 | 1 | 0.9708 | 10000, 7143, 5102, 3644, 2603, 1859, 1328, 949 | 1.4 | YES | | plate sealer used | SLS-B6 |
| B3 | DF | AA61RD | 1600 | 21.537 | 0.446 | 5.64% | 3 | 2 | 0.9810 | 10000, 7143, 5102, 3644, 2603, 1859, 1328, 949 | 1.4 | YES | | plates read 15-16 hr late; orignial reading used wrong OD wavelength; plate sealer used | SLS-B11 |
| B4 | DF | AA61RD | 2170 | 29.187 | 0.404 | 9.58% | 2 | 6 | 0.8825 | 4000, 2857, 2041, 1458, 1041, 744, 531, 379 | 1.4 | YES | | | SLS-B12 |
| B5 | DF | AA61RD | 3140 | 42.188 | 0.431 | 0.64% | 1 | 3 | 0.9519 | 4000, 2857, 2041, 1458, 1041, 744, 531, 379 | 1.4 | YES | | plate sealer used | SLS-B15 |
| ***ECBC*** | | | | | | | | | | | | | | | |
| AA61HE-A1 | RF | AA61HE | NA | NA | 0.241 | 44.19% | 1 | 1 | 0.0000 | 10000, 1000, 100,10, 1, 0.1, 0.01, 0.001 | 10 | RF | range finder | | SLS-P3 |
| AA61HE-A2 | RF | AA61HE | 600 | 8.057 | 0.409 | 0.71% | 1 | 1 | 0.6930 | 1000, 100,10, 1, 0.1, 0.01, 0.001, 0.0001 | 10 | RF | range finder | | SLS-P17 |
| AA61HE-B1 | DF | AA61HE | 728 | 9.777 | 0.418 | 6.56% | 2 | 6 | 0.9476 | 1000, 826, 683, 565, 467, 386, 319, 263 | 1.21 | YES | | | SLS-P19 |
| AA61HE-B2 | DF | AA61HE | 802 | 10.769 | 0.550 | 3.94% | 3 | 5 | 0.8389 | 1210, 1000, 826, 683, 565, 467, 386, 319 | 1.21 | YES | | | SLS-P22 |
| AA61HE-B3 | DF | AA61HE | 940 | 12.624 | 0.603 | 3.31% | 2 | 5 | 0.9363 | 1210, 1000, 826, 683, 565, 467, 386, 319 | 1.21 | YES | | | SLS-P23 |
| ***FRAME*** | | | | | | | | | | | | | | | |
| FAL.3T3.LU.A1.09/01/04 | RF | AA61LU | 1060 | 14.295 | 0.483 | 0.62% | 0 | 1 | 0.9323 | 10000, 1000, 100, 10, 1, 0.1, 0.01, 0.001 | 10 | RF | range finder | | FAL.3T3.SLS.09/01/04 |
| FAL3T3.LU.A2.16.01.04 | DF | AA61LU | 391 | 5.250 | 0.897 | 4.13% | 3 | 5 | 0.7288 | 10000, 4651, 2163, 1006, 468, 218, 101, 47.1 | 2.15 | YES | | | FAL.3T3.SLS.16/01/04 |
| FAL3T3.LU.B1.23.01.04 | DF | AA61LU | 1090 | 14.696 | 0.505 | 7.27% | 1 | 2 | 0.9546 | 5000, 2325.6, 1081.7, 503.1, 234.0, 108.8, 50.6, 23.5 | 2.15 | YES | | | FAL3T3.23-01-04 |
| FAL3T3.LU.B2.30.01.04 | DF | AA61LU | 935 | 12.566 | 0.401 | 11.07% | 3 | 2 | 0.9787 | 5000, 3401, 2314, 1574, 1071, 728, 496, 337 | 1.47 | YES | | steep toxicity curve; will adjust concentrations for B3 to 2500 ug/ml (1.47 dil) | FAL.3T3.SLS.29/01/04 |

# 3T3 NRU Reference Substance Data

| Experiment ID 3T3 Cells | Assay Type[1] | Substance ID | $IC_{50}$ (ug/mL) | $IC_{50}$ (mM) | Mean VC OD[2] | Difference of right/left VC from mean VC[3] | Number of Points 0 - 50 %[4] | Number of Points 50 - 100 %[5] | $R^2$ [6] | Exposure Concentrations (ug/mL)[7] | Dilution Factor[8] | Acceptable Tests[9] | Rationale for Unacceptability | Notes | PC ID |
|---|---|---|---|---|---|---|---|---|---|---|---|---|---|---|---|
| FAL3T3.LU.B3.06-02-04 | DF | AA6 LU | 923 | 12.393 | 0.361 | 18.60% | 1 | 3 | 0.9557 | 5000, 3401, 2314, 1574, 1071, 728, 496, 337 | 1.47 | NO | %VC difference >15; possible volatility problem | VC1 ODs lower than VC2 ODs | FAL.3T3.SLS.06/02/04 |
| **SODIUM OXALATE** | | | | | | | | | | | | | | | |
| ***IIVS*** | | | | | | | | | | | | | | | |
| A1 | RF | AA61GX | 24.9 | 0.186 | 0.341 | 1.34% | 1 | 4 | 0.9800 | 100, 10, 1, 0.1, 0.01, 0.001, 0.0001, 0.00001 | 10 | RF | range finder | ppt in 1X C1 and 2X C1 | SLS-A5 |
| B1 | DF | AA61GX | 19.7 | 0.147 | 0.435 | 3.04% | 5 | 3 | 0.9762 | 100, 66.7, 44.4, 29.6, 19.8, 13.2, 8.78, 5.85 | 1.5 | YES | | ppt in 2X C1; ppt in 1X C1-C3 | SLS-B6 |
| B2 | DF | AA61GX | 37.9 | 0.283 | 0.472 | 1.09% | 3 | 5 | 0.9774 | 100, 66.7, 44.4, 29.6, 19.8, 13.2, 8.78, 5.85 | 1.5 | YES | | ppt in 2X C1-C4; plates read 15-16 hr late; orignial reading used wrong OD wavelength | SLS-B11 |
| B3 | DF | AA61GX | 80.2 | 0.598 | 0.349 | 13.14% | 1 | 4 | 0.9617 | 100, 66.7, 44.4, 29.6, 19.8, 13.2, 8.78, 5.85 | 1.5 | YES | | ppt in 2X C1-C2; ppt in 1X C1-C4 | SLS-B12 |
| B4 | DF | AA61GX | 60.1 | 0.449 | 0.509 | 1.26% | 2 | 6 | 0.9495 | 100, 66.7, 44.4, 29.6, 19.8, 13.2, 8.78, 5.85 | 1.5 | YES | | ppt in 2X C1 | SLS-B15 |
| ***ECBC*** | | | | | | | | | | | | | | | |
| AA61LZ-A1 | RF | AA61LZ | 55.3 | 0.413 | 0.544 | 0.17% | 1 | 4 | 0.9689 | 1000, 100, 10, 1, 0.1, 0.01, 0.001, 0.0001 | 10 | RF | range finder | ppt in 2X C1; ppt in 1X in C1-C2 | SLS-15 |
| AA61LZ-B1 | DF | AA61LZ | 49.9 | 0.372 | 0.455 | 3.70% | 3 | 5 | 0.9871 | 500, 233, 108, 50.3, 23.4, 10.9, 5.1, 2.4 | 2.15 | YES | | ppt in 2X C1-C2; ppt in 1X C1-C5 | SLS-P65 |
| AA61LZ-B2 | DF | AA61LZ | 54.0 | 0.403 | 0.527 | 6.96% | 3 | 5 | 0.9578 | 500, 233, 108, 50.3, 23.4, 10.9, 5.1, 2.4 | 2.15 | YES | | ppt in 2X C1-C2; ppt in 1X in C1-C5 | SLS-P66 |
| AA61LZ-B3 | DF | AA61LZ | 22.2 | 0.166 | 0.450 | 3.43% | 3 | 3 | 0.9836 | 500, 233, 108, 50.3, 23.4, 10.9, 5.1, 2.4 | 2.15 | YES | | ppt in 2X C1-C2; ppt in 1X C1-C6 | SLS-P68 |
| ***FRAME*** | | | | | | | | | | | | | | | |
| FAL.3T3.RC.A1.21.10.04 | RF | AA61RC | 74.6 | 0.557 | 0.291 | 1.60% | 3 | 0 | 0.9198 | 10000, 1000, 100, 10, 1.0, 0.1, 0.01, 0.001 | 10 | RF | range finder; no points between 50-100% | ppt in 2X C1; ppt in 1X in C1-C3 | FAL.3T3.SLS.21.10.04 |
| FAL.3T3.RC.B1.11.11.04 | DF | AA61RC | 28.8 | 0.215 | 0.471 | 13.15% | 5 | 0 | 0.8505 | 500, 340, 231, 157, 107, 72.8, 49.6, 33.7 | 1.47 | NO | no points between 50-100% | ppt in 1X C1-C8 | FAL.3T3.SLS.10.11.04 |
| FAL.3T3.RC.B2.25.11.04 | DF | AA61RC | 34.5 | 0.258 | 0.369 | 4.78% | 1 | 1 | 0.8807 | 250, 116, 54.1, 25.2, 11.7,5.44, 2.53, 1.18 | 2.15 | YES | | ppt in 2X C1; ppt in 1X in C1-C4 | FAL.3T3.SLS.25.11.04 |
| FAL.3T3.RC.B3.26.11.04 | DF | AA61RC | 37.3 | 0.279 | 0.309 | 3.13% | 1 | 1 | 0.9655 | 250, 116, 54.1, 25.2, 11.7,5.44, 2.53, 1.18 | 2.15 | YES | | ppt in 2X C1; ppt in 1X in C1-C4; | FAL.3T3.SLS.26.11.04 |
| FAL.3T3.RC.B4.02.12.04 | DF | AA61RC | 235 | 1.753 | 0.282 | 2.19% | 1 | 0 | 0.2212 | 250, 116, 54.1, 25.2, 11.7,5.44, 2.53, 1.18 | 2.15 | NO | no points between 50-100% | C7 gives > 200% viability; ppt in 2X C1 and 1X C1-C2 | FAL.3T3.SLS.02.12.04 (RB) |
| FAL.3T3.RC.B5.09.12.04 | DF | AA61RC | 21.1 | 0.157 | 0.380 | 8.96% | 2 | 2 | 0.8788 | 250, 116, 54.1, 25.2, 11.7,5.44, 2.53, 1.18 | 2.15 | YES | | ppt in 2X C1; ppt in 1X in C1-C4 | FAL.3T3.SLS.09.12.04 |
| **SODIUM SELENATE** | | | | | | | | | | | | | | | |
| ***IIVS*** | | | | | | | | | | | | | | | |
| A1 | RF | AA61FS | 39.2 | 0.208 | 0.540 | 3.31% | 1 | 2 | 0.9909 | 10000, 1000, 100, 10, 1, 0.1, 0.01, 0.001 | 10 | RF | range finder | | SLS-A1 |
| B1 | DF | AA61FS | 42.3 | 0.224 | 0.407 | 0.61% | 5 | 3 | 0.9884 | 300, 200, 133, 89, 59.3, 39.5, 26.3, 17.6 | 1.5 | YES | | | SLS-B1 |
| B2 | DF | AA61FS | 35.2 | 0.186 | 0.507 | 2.69% | 6 | 2 | 0.9874 | 300, 200, 133, 89, 59.3, 39.5, 26.3, 17.6 | 1.5 | YES | | | SLS-B2 |
| B3 | DF | AA61FS | 40.0 | 0.212 | 0.504 | 9.65% | 5 | 2 | 0.9879 | 300, 200, 133, 89, 59.3, 39.5, 26.3, 17.6 | 1.5 | NO | PC failed | | SLS-B3 |
| B4 | DF | AA61FS | 32.1 | 0.170 | 0.458 | 0.02% | 5 | 2 | 0.9884 | 300, 200, 133, 89, 59.3, 39.5, 26.3, 17.6 | 1.5 | YES | | | SLS-B4 |
| ***ECBC*** | | | | | | | | | | | | | | | |
| AA61LF-A1 | RF | AA61LF | 6.04 | 0.032 | 0.438 | 0.99% | 1 | 2 | 0.9663 | 10000, 1000, 100, 10, 1.0, 0.1, 0.01, 0.001 | 10 | RF | PC failed; range finder | | SLS-P2 |
| AA61LF-B1 | DF | AA61LF | 13.6 | 0.072 | 0.537 | 2.38% | 3 | 2 | 0.9271 | 100, 68.1, 46.3, 31.5, 21.4, 14.6, 9.9, 6.8 | 1.47 | YES | | | SLS-P6 |

# 3T3 NRU Reference Substance Data

| Experiment ID 3T3 Cells | Assay Type[1] | Substance ID | $IC_{50}$ (ug/mL) | $IC_{50}$ (mM) | Mean VC OD[2] | Difference of right/left VC from mean VC[3] | Number of Points 0 - 50 %[4] | Number of Points 50 - 100 %[5] | $R^2$ [6] | Exposure Concentrations (ug/mL)[7] | Dilution Factor[8] | Acceptable Tests[9] | Rationale for Unacceptability | Notes | PC ID |
|---|---|---|---|---|---|---|---|---|---|---|---|---|---|---|---|
| AA61LF-B2 | DF | AA61LF | 13.8 | 0.073 | 0.597 | 3.18% | 4 | 2 | 0.9754 | 100, 68.1, 46.3, 31.5, 21.4, 14.6, 9.9, 6.8 | 1.47 | YES | | | SLS-P8 |
| AA61LF-B3 | DF | AA61LF | 10.8 | 0.057 | 0.569 | 3.10% | 3 | 2 | 0.9626 | 100, 68.1, 46.3, 31.5, 21.4, 14.6, 9.9, 6.8 | 1.47 | YES | | | SLS-P10 |
| ***FRAME*** | | | | | | | | | | | | | | | |
| FAL.3T3.A1.NS.200603 | RF | AA61NS | 221 | 1.170 | 0.670 | 1.17% | 0 | 0 | 0.9739 | 10000,1000, 100, 10, 1.0, 0.1, 0.01, 0.001 | 10 | RF | no points between 10 - 90%; range finder | | FAL.3T3.SLS2.A1.200603 |
| FAL.3T3.B1.NS.27.06.03 | DF | AA61NS | 62.4 | 0.330 | 0.497 | 3.76% | 1 | 1 | 0.8042 | 120, 81.6, 55.5, 37.8, 25.7, 17.5, 11.9, 8.1 | 1.47 | YES | | | FAL.3T3.SLS.A2.27.06.03 |
| FAL.3T3.B2.NS.04.07.03 | DF | AA61NS | 52.6 | 0.278 | 0.525 | 2.86% | 2 | 1 | 0.9189 | 200, 136, 92.6, 63, 42.8, 29.2, 19.8, 13.5 | 1.47 | NO | PC failed | | FAL.3T3.SLS.04.07.03 |
| FAL.3T3.B3.NS.11.07.03 | DF | AA61NS | 57.7 | 0.305 | 0.555 | 5.84% | 2 | 1 | 0.9734 | 200, 136, 92.6, 63, 42.8, 29.2, 19.8, 13.5 | 1.47 | YES | | | FAL.3T3.SLS.11.07.03 |
| FAL.3T3.B4.NS.17.07.03 | DF | AA61NS | 42.4 | 0.224 | 0.666 | 2.83% | 2 | 1 | 0.9758 | 200, 136, 92.6, 63, 42.8, 29.2, 19.8, 13.5 | 1.47 | YES | | | FAL.3T3.SLS.17.07.03 |

## STRYCHNINE

| | | | | | | | | | | | | | | | |
|---|---|---|---|---|---|---|---|---|---|---|---|---|---|---|---|
| ***IIVS*** | | | | | | | | | | | | | | | |
| A1 | RF | AA61JY | 77.8 | 0.233 | 0.337 | 1.56% | 1 | 0 | 0.8728 | 100, 10, 1, 0.1, 0.01, 0.001, 0.0001, 0.00001 | 10 | RF | range finder | | SLS-A5 |
| B1 | DF | AA61JY | 89.7 | 0.268 | 0.489 | 1.52% | 1 | 3 | 0.8961 | 100, 71.4, 51.0, 36.4, 26.0, 18.6, 13.3, 9.49 | 1.4 | YES | | | SLS-B4 |
| B2 | DF | AA61JY | 80.2 | 0.240 | 0.355 | 6.46% | 1 | 2 | 0.8383 | 100, 71.4, 51.0, 36.4, 26.0, 18.6, 13.3, 9.49 | 1.4 | YES | | | SLS-B7 |
| B3 | DF | AA61JY | 80.7 | 0.241 | 0.434 | 7.93% | 1 | 2 | 0.9277 | 100, 71.4, 51.0, 36.4, 26.0, 18.6, 13.3, 9.49 | 1.4 | YES | | ppt in 2X C1; slight film of powder on medium surface | SLS-B8 |
| ***ECBC*** | | | | | | | | | | | | | | | |
| AA61NR-A1 | RF | AA61NR | NA | NA | 0.317 | 12.60% | 1 | 4 | NA | 500, 50.0, 5.0, 0.5, 0.05, 0.005, 0.0005, 0.00005 | 10 | RF | range finder | ppt in 2X C1 | SLS-P49 |
| AA61NR-B1 | DF | AA61NR | NA | NA | 0.431 | 6.47% | 8 | 0 | NA | 800, 661, 546, 452, 373, 308, 255, 211 | 1.21 | NO | no points between 50 - 100% | ppt in 2X C1-C7; dilution is 1.21 but no points have greater than 50% viability | SLS-P65 |
| AA61NR-B2 | DF | AA61NR | 452 | 1.351 | 0.526 | 5.34% | 2 | 6 | 0.8969 | 800, 544, 370, 252, 171, 117, 79.3, 53.9 | 1.47 | YES | | ppt in 2X C1-C4; ppt in 1X C1 | SLS-P66 |
| AA61NR-B3 | DF | AA61NR | 418 | 1.249 | 0.461 | 0.27% | 2 | 5 | 0.9559 | 800, 544, 370, 252, 171, 117, 79.3, 53.9 | 1.47 | YES | | ppt in 2X C1-C2 | SLS-P68 |
| AA61NR-B4 | DF | AA61NR | 298 | 0.891 | 0.410 | 5.55% | 1 | 6 | 0.8163 | 800, 544, 370, 252, 171, 117, 79.3, 53.9 | 1.47 | YES | | ppt in 2X C1; ppt in 1X C1 | SLS-P70 |
| ***FRAME*** | | | | | | | | | | | | | | | |
| FAL.3T3.FY.A1.21.10.04 | RF | AA61FY | 133 | 0.397 | 0.362 | 10.70% | 1 | 0 | 0.5214 | 250, 25, 2.5, 0.25, 0.025, 0.0025, 0.00025, 0.000025 | 10 | RF | range finder; no points between 50-100% | | FAL.3T3.SLS.21.10.04 |
| FAL.3T3.FY.B1.25.11.04 | DF | AA61FY | 108 | 0.322 | 0.436 | 8.15% | 5 | 2 | 0.8455 | 250, 207, 171, 141, 117, 96.4, 79.7, 65.8 | 1.21 | YES | | | FAL.3T3.SLS.25.11.04 |
| FAL.3T3.FY.B2.26.11.04 | DF | AA61FY | 118 | 0.352 | 0.289 | 2.16% | 5 | 2 | 0.9110 | 250, 207, 171, 141, 117, 96.4, 79.7, 65.8 | 1.21 | YES | | steep toxicity curve | FAL.3T3.SLS.26.11.04 |
| FAL.3T3.FY.B3.02.12.04 | DF | AA61FY | NA | NA | 0.258 | 2.30% | 0 | 0 | NA | 250, 207, 171, 141, 117, 96.4, 79.7, 65.8 | 1.21 | NO | no points between 0-100% | no toxicity values less than 140% viability | FAL.3T3.SLS.02.12.04 (SW) |
| FAL.3T3.FY.B4.09.12.04 | DF | AA61FY | 147 | 0.440 | 0.350 | 0.00% | 4 | 3 | 0.7540 | 250, 207, 171, 141, 117, 96.4, 79.7, 65.8 | 1.21 | YES | | | FAL.3T3.SLS.09.12.04 |

## THALLIUM I SULFATE

| | | | | | | | | | | | | | | | |
|---|---|---|---|---|---|---|---|---|---|---|---|---|---|---|---|
| ***IIVS*** | | | | | | | | | | | | | | | |
| A1 | RF | AA61KJ | 7.74 | 0.015 | 0.407 | 4.94% | 2 | 3 | 0.9809 | 100, 10, 1, 0.1, 0.01, 0.001, 0.0001, 0.00001 | 10 | RF | range finder | | SLS-A1 |
| B1 | DF | AA61KJ | 5.31 | 0.011 | 0.466 | 2.22% | 6 | 2 | 0.9348 | 50.0, 31.3, 19.5, 12.2, 7.63, 4.77, 2.98, 1.86 | 1.6 | YES | | | SLS-B4 |

# 3T3 NRU Reference Substance Data

| Experiment ID 3T3 Cells | Assay Type[1] | Substance ID | $IC_{50}$ (ug/mL) | $IC_{50}$ (mM) | Mean VC OD[2] | Difference of right/left VC from mean VC[3] | Number of Points 0 - 50 %[4] | Number of Points 50 - 100 %[5] | $R^2$ [6] | Exposure Concentrations (ug/mL)[7] | Dilution Factor[8] | Acceptable Tests[9] | Rationale for Unacceptability | Notes | PC ID |
|---|---|---|---|---|---|---|---|---|---|---|---|---|---|---|---|
| B2 | DF | AA61KJ | 8.29 | 0.02 | 0.357 | 10.53% | 4 | 4 | 0.9392 | 50.0, 31.3, 19.5, 12.2, 7.63, 4.77, 2.98, 1.86 | 1.6 | YES | | outlier removed bySD | SLS-B7 |
| B3 | DF | AA61KJ | 5.22 | 0.01 | 0.454 | 0.66% | 5 | 3 | 0.9603 | 50.0, 31.3, 19.5, 12.2, 7.63, 4.77, 2.98, 1.86 | 1.6 | YES | | | SLS-B8 |
| ***ECBC*** | | | | | | | | | | | | | | | |
| AA61PB-A1 | RF | AA61PB | 5.41 | 0.011 | 0.362 | 9.63% | 3 | 5 | 0.9706 | 500, 50.0, 5.0, 0.5, 0.05, 0.005, 0.0005, 0.00005 | 10 | RF | range finder | | SLS-P49 |
| AA61PB-B1 | DF | AA61PB | NA | NA | 0.509 | 7.59% | 6 | 2 | NA | 100, 46.5, 21.6, 10.1, 4.68, 2.18, 1.01, 0.47 | 2.15 | NO | PC failed | | SLS-P53 |
| AA61PB-B2 | DF | AA61PB | 3.46 | 0.007 | 0.703 | 7.58% | 5 | 3 | 0.9831 | 100, 46.5, 21.6, 10.1, 4.68, 2.18, 1.01, 0.47 | 2.15 | YES | | | SLS-P54 |
| AA61PB-B3 | DF | AA61PB | 2.12 | 0.004 | 0.539 | 11.54% | 6 | 2 | 0.9629 | 100, 46.5, 21.6, 10.1, 4.68, 2.18, 1.01, 0.47 | 2.15 | YES | | | SLS-P57 |
| AA61PB-B4 | DF | AA61PB | 2.86 | 0.006 | 0.399 | 3.57% | 3 | 5 | 0.9627 | 100, 46.5, 21.6, 10.1, 4.68, 2.18, 1.01, 0.47 | 2.15 | YES | | | SLS-P59 |
| ***FRAME*** | | | | | | | | | | | | | | | |
| FAL.3T3.GB.A1.09/01/04 | RF | AA61GB | 0.015 | 0.000 | 0.664 | 4.29% | 1 | 3 | 0.9201 | 0.1, 0.01, 0.001, 0.0001, 0.00001, 0.000001, 0.0000001, 0.00000001 | 10 | RF | range finder | | FAL.3T3.SLS.09/01/04 |
| FAL3T3.GB.A2.16.01.04 | DF | AA61GB | 2.01 | 0.004 | 0.861 | 8.61% | 7 | 1 | 0.8562 | 250.0, 116.0, 54.1, 25.2, 11.8, 5.4, 2.5, 1.2 | 2.15 | YES | | | FAL.3T3.SLS.16/01/04 |
| FAL3T3.GB.B1.23.01.04 | DF | AA61GB | 13.6 | 0.027 | 0.552 | 1.48% | 3 | 3 | 0.9318 | 250, 79.1, 25.0, 7.9, 2.5, 0.8, 0.25, 0.08 | 3.16 | YES | | difficult to get above 250 ug/ml; unlikely to reach 100% toxicity | FAL3T3.23-01-04 |
| FAL3T3.GB.B2.30.01.04 | DF | AA61GB | 27.1 | 0.054 | 0.422 | 2.70% | 3 | 3 | 0.9382 | 500, 158.7, 50.4, 16.0, 5.1, 1.6, 0.5, 0.2 | 3.15 | YES | | slow increase in toxicity; reached 90% toxicity; | FAL.3T3.SLS.29/01/04 |
| FAL3T3.GB.B3.06-02-04 | DF | AA61 GB | 10.9 | 0.022 | 0.412 | 3.80% | 3 | 5 | 0.9648 | 500, 158.7, 50.4, 16.0, 5.1, 1.6, 0.5, 0.2 | 3.15 | YES | | | FAL.3T3.SLS.06/02/04 |

## TRICHLOROACETIC ACID

| | | | | | | | | | | | | | | | |
|---|---|---|---|---|---|---|---|---|---|---|---|---|---|---|---|
| ***IIVS*** | | | | | | | | | | | | | | | |
| A1 | RF | AA61MR | 637 | 3.897 | 0.387 | 5.74% | 2 | 1 | 0.9378 | 10000, 1000, 100, 10, 1, 0.1, 0.01, 0.001 | 10 | RF | range finder | ppt in 1X C1 | SLS-A4 |
| B1 | DF | AA61MR | 861 | 5.269 | 0.510 | 3.85% | 3 | 5 | 0.9807 | 3000, 2000, 1333, 889, 593, 395, 263, 176 | 1.5 | YES | | outlier removed bySD | SLS-B4 |
| B2 | DF | AA61MR | 873 | 5.343 | 0.351 | 6.44% | 3 | 5 | 0.9556 | 3000, 2000, 1333, 889, 593, 395, 263, 176 | 1.5 | YES | | | SLS-B7 |
| B3 | DF | AA61MR | 670 | 4.100 | 0.423 | 0.22% | 4 | 4 | 0.9652 | 3000, 2000, 1333, 889, 593, 395, 263, 176 | 1.5 | YES | | | SLS-B8 |
| ***ECBC*** | | | | | | | | | | | | | | | |
| AA61KT-A1 | RF | AA61KT | 977 | 5.981 | 0.403 | 6.66% | 2 | 2 | 0.9703 | 10000,1000, 100, 10, 1,0.1, 0.01, 0.001 | 10 | RF | range finder | ppt in 1X C1 | SLS-P13 |
| AA61KT-B1 | DF | AA61KT | 859 | 5.257 | 0.408 | 5.82% | 4 | 3 | 0.9878 | 10000, 4651, 2163, 1006, 468, 218, 101, 47.1 | 2.15 | YES | | ppt in 1X C1 | SLS-P33 |
| AA61KT-B2 | DF | AA61KT | NA | NA | 0.585 | 1.42% | 1 | 0 | NA | 10000, 4651, 2163, 1006, 468, 218, 101, 47.1 | 2.15 | NO | no points between 50 - 100%; closest point is 100.0% | SD rejected test; ppt in 1X C1 | SLS-P35 |
| AA61KT-B3 | DF | AA61KT | 767 | 4.696 | 0.491 | 0.48% | 4 | 4 | 0.9890 | 10000, 4651, 2163, 1006, 468, 218, 101, 47.1 | 2.15 | YES | | ppt in 1X C1 | SLS-P37 |
| AA61KT-B4 | DF | AA61KT | 661 | 4.043 | 0.403 | 0.04% | 4 | 4 | 0.9878 | 10000, 4651, 2163, 1006, 468, 218, 101, 47.1 | 2.15 | YES | | ppt in 1X C1 | SLS-P40 |
| ***FRAME*** | | | | | | | | | | | | | | | |
| FAL.3T3.GH.A1.10.09.04 | RF | AA61GH | 1380 | 8.428 | 0.459 | 10.90% | 1 | 2 | 0.9027 | 10000, 1000, 100, 10, 1, 0.1, 0.01, 0.001 | 10 | RF | range finder | ppt in 1X C1 | FAL.3T3.SLS.10.09.04 |
| FAL.3T3.GH.1.16.09.04 | DF | AA61GH | 1240 | 7.564 | 0.394 | 2.96% | 2 | 3 | 0.9170 | 5000, 2326, 1082, 503, 234, 109, 50.6, 23.5 | 2.15 | YES | | | FAL.3T3.SLS.16.09.04 |

# 3T3 NRU Reference Substance Data

| Experiment ID 3T3 Cells | Assay Type[1] | Substance ID | $IC_{50}$ (ug/mL) | $IC_{50}$ (mM) | Mean VC OD[2] | Difference of right/left VC from mean VC[3] | Number of Points 0 - 50 %[4] | Number of Points 50 - 100 %[5] | $R^2$ [6] | Exposure Concentrations (ug/mL)[7] | Dilution Factor[8] | Acceptable Tests[9] | Rationale for Unacceptability | Notes | PC ID |
|---|---|---|---|---|---|---|---|---|---|---|---|---|---|---|---|
| FAL.3T3.GH.B2.15.10.04 | DF | AA61GH | 1140 | 6.962 | 0.302 | 14.14% | 2 | 3 | 0.9396 | 5000, 2326, 1082, 503, 234, 109, 50.6, 23.5 | 2.15 | YES | | | FAL.3T3.SLS.15.10.04 |
| FAL.3T3.GH.B3.28.10.04 | DF | AA61GH | 1280 | 7.830 | 0.188 | 9.65% | 2 | 2 | 0.9091 | 5000, 2326, 1082, 503, 234, 109, 50.6, 23.5 | 2.15 | YES | | | FAL.3T3.SLS.28.10.04 |

## 1,1,1-TRICHLOROETHANE

| | | | | | | | | | | | | | | | |
|---|---|---|---|---|---|---|---|---|---|---|---|---|---|---|---|
| ***IIVS*** | | | | | | | | | | | | | | | |
| A1 | RF | AA61KG | 5900 | 44.240 | 0.312 | 5.85% | 1 | 6 | 0.6051 | 10000, 1000, 100, 10, 1, 0.1, 0.01, 0.001 | 10 | RF | range finder | | SLS-A5 |
| B1 | DF | AA61KG | 9710 | 72.746 | 0.446 | 10.58% | 1 | 0 | 0.9158 | 10000, 7692, 5917, 4552, 3501, 2693, 2072, 1594 | 1.3 | NO | no points between 50 - 100% | ppt in 2X C1 | SLS-B6 |
| B2 | DF | AA61KG | 9840 | 73.758 | 0.474 | 5.24% | 1 | 6 | 0.7420 | 10000, 8333, 6944, 5787, 4823, 4019, 3349, 2791 | 1.2 | YES | | ppt in 2X C1; plates read 15-16 hr late; orignial reading used wrong OD wavelength | SLS-B11 |
| B3 | DF | AA61KG | 10000 | 75.303 | 0.355 | 0.14% | 0 | 4 | 0.8872 | 10000, 8333, 6944, 5787, 4823, 4019, 3349, 2791 | 1.2 | YES | no points between 0 - 50%; | ppt in 2X C1; passes because of 1.2 dilution factor | SLS-B12 |
| B4 | DF | AA61KG | 9640 | 72.246 | 0.490 | 2.52% | 1 | 2 | 0.9252 | 10000, 8333, 6944, 5787, 4823, 4019, 3349, 2791 | 1.2 | YES | | ppt in 2X C1 | SLS-B15 |
| ***ECBC*** | | | | | | | | | | | | | | | |
| AA61JV-A1 | RF | AA61JV | NA | NA | 0.565 | 0.77% | 0 | 4 | NA | 10000, 1000, 100, 10, 1, 0.1, 0.01, 0.001 | 10 | RF | range finder | | SLS-15 |
| AA61JV-B1 (sealer) | DF | AA61JV | NA | NA | 0.621 | 5.88% | 0 | 8 | NA | 30000, 24793, 20490, 16934, 13995, 11566, 9559, 7900 | 1.21 | NO | PC failed; no points between 0 - 50% | dilution factor is 1.21; no points between 0-50%; test would pass due to dilution factor; ppt in 2X C4 | SLS-P61 |
| AA61JV-B2 (sealer) | DF | AA61JV | 41100 | 308.185 | 0.353 | 2.97% | 3 | 5 | 0.6525 | 50000, 41322, 34151, 28224, 23325, 19277, 15932, 13167 | 1.21 | YES | | ppt in 2X C1-C5; chemical made pipets sticky and corrosive to the reservoir | SLS-P64 |
| AA61JV-B3 (sealer) | DF | AA61JV | NA | NA | 0.448 | 5.01% | ? | ? | NA | 50000, 41322, 34151, 28224, 23325, 19277, 15932, 13167 | 1.21 | NO | can't properly determine points between 0 - 100% | "roller coaster" toxicity curve; chemical physically intereacted with plastic pipets; ppt in 2X C1-C8 (oily) | SLS-P73 |
| ***FRAME*** | | | | | | | | | | | | | | | |
| FAL.3T3.PN.A1.21.10.04 | RF | AA61PN | NA | NA | 0.315 | 6.33% | 0 | 0 | 0.0000 | 10000, 1000, 100, 10, 1.0, 0.1, 0.01, 0.001 | 10 | RF | range finder; no points between 0-100% | | FAL.3T3.SLS.21.10.04 |
| FAL.3T3.PN.B1.04.11.04 | DF | AA61PN | 18400 | 137.661 | 0.285 | 9.94% | 1 | 2 | 0.6655 | 25000, 17007, 11569, 7870, 5354, 3642, 2478, 1686 | 1.47 | YES | | ppt in 1X C1 | FAL.3T3.SLS.04.11.04 |
| FAL.3T3.PN.B2.19.11.04 | DF | AA61PN | 20600 | 154.458 | 0.278 | 4.29% | 2 | 0 | 0.7843 | 25000, 20661, 17075, 14112, 11663, 9639, 7966, 6583 | 1.21 | YES | no points between 50-100% | test passes because lowest dilution factor used (1.21); ppt in 2X C1-C2 | FAL.3T3.SLS.19.11.04 |
| FAL.3T3.PN.B3.25.11.04 | DF | AA61PN | 22000 | 165.125 | 0.365 | 1.64% | 1 | 2 | 0.6250 | 25000, 20661, 17075, 14112, 11663, 9639, 7966, 6583 | 1.21 | YES | | ppt in 2X C1; ppt in 1X C1; C8 concentration shows high toxicity | FAL.3T3.SLS.25.11.04 |
| FAL.3T3.PN.B4.26.11.04 | DF | AA61PN | 24000 | 179.809 | 0.331 | 2.57% | 2 | 4 | 0.1704 | 25000, 20661, 17075, 14112, 11663, 9639, 7966, 6583 | 1.21 | YES | | ppt in 2X C1-C4; | FAL.3T3.SLS.26.11.04 |

## TRIETHYLENEMELAMINE

| | | | | | | | | | | | | | | | |
|---|---|---|---|---|---|---|---|---|---|---|---|---|---|---|---|
| ***IIVS*** | | | | | | | | | | | | | | | |
| A1 | RF | AA61MT | 0.214 | 0.0010 | 0.338 | 10.51% | 2 | 4 | 0.9591 | 10.0, 1.0, 0.1, 0.01, 0.001, 0.0001, 0.00001, 0.000001 | 10 | RF | range finder | ppt in 2000ug/ml stock in DMSO | SLS-A2 |

# 3T3 NRU Reference Substance Data

| Experiment ID 3T3 Cells | Assay Type[1] | Substance ID | $IC_{50}$ (ug/mL) | $IC_{50}$ (mM) | Mean VC OD[2] | Difference of right/left VC from mean VC[3] | Number of Points 0 - 50 %[4] | Number of Points 50 - 100 %[5] | $R^2$ [6] | Exposure Concentrations (ug/mL)[7] | Dilution Factor[8] | Acceptable Tests[9] | Rationale for Unacceptability | Notes | PC ID |
|---|---|---|---|---|---|---|---|---|---|---|---|---|---|---|---|
| B1 | DF | AA61MT | 0.223 | 0.0011 | 0.497 | 2.36% | 4 | 4 | 0.9169 | 1.00, 0.625, 0.391, 0.244, 0.153, 0.095, 0.060, 0.037 | 1.6 | YES | | | SLS-B5 |
| B2 | DF | AA61MT | 0.127 | 0.0006 | 0.377 | 3.14% | 5 | 3 | 0.9339 | 2.00, 1.11, 0.617, 0.343, 0.191, 0.106, 0.059, 0.033 | 1.8 | YES | | | SLS-B9 |
| B3 | DF | AA61MT | 0.156 | 0.0008 | 0.321 | 8.67% | 5 | 3 | 0.9469 | 2.00, 1.11, 0.617, 0.343, 0.191, 0.106, 0.059, 0.033 | 1.8 | YES | | | SLS-B10 |
| ***ECBC*** | | | | | | | | | | | | | | | |
| AA61GE-A1 revised by | RF | AA61GE | 0.2 | 0.0010 | 0.256 | 6.24% | 2 | 5 | 0.9389 | 10, 1, 0.1, 0.01, 0.001, 0.0001, 0.00001, 0.000001 | 10 | RF | range finder | | SLS-P9 |
| AA61GE-B1 | DF | AA61GE | 0.117 | 0.0006 | 0.424 | 19.49% | 5 | 3 | 0.9178 | 4.00, 1.86, 0.685, 0.402, 0.187, 0.087, 0.40, 0.019 | 2.15 | NO | % VC difference > 15 | ppt in 2X C1 | SLS-P19 |
| AA61GE-B2 | DF | AA61GE | 0.0766 | 0.0004 | 0.375 | 6.15% | 6 | 2 | 0.9339 | 4.00, 1.86, 0.685, 0.402, 0.187, 0.087, 0.40, 0.019 | 2.15 | YES | | | SLS-P21 |
| AA61GE-B3 | DF | AA61GE | 0.0951 | 0.0005 | 0.599 | 3.52% | 2 | 6 | 0.9594 | 4.00, 1.86, 0.685, 0.402, 0.187, 0.087, 0.40, 0.019 | 2.15 | YES | | | SLS-P24 |
| AA61GE-B4 | DF | AA61GE | 0.0861 | 0.0004 | 0.563 | 11.19% | 2 | 6 | 0.9512 | 4.00, 1.86, 0.685, 0.402, 0.187, 0.087, 0.40, 0.019 | 2.15 | YES | | | SLS-P26 |
| ***FRAME*** | | | | | | | | | | | | | | | |
| FAL.3T3.LB.A1.01/04/04 | RF | AA61LB | 2.83 | 0.0138 | 0.270 | 4.91% | 1 | 1 | 0.7626 | 10.0, 1.0, 0.1, 0.01, 0.001, 0.0001, 0.00001, 0.000001, | 10 | RF | range finder | | FAL.3T3.SLS.01/04/04 |
| FAL.3T3.LB.B1.29/04/04 | DF | AA61LB | 1.44 | 0.0071 | 0.289 | 3.08% | 3 | 3 | 0.8508 | 50.0, 23.3, 10.8, 5.03, 2.34, 1.09, 0.506, 0.235 | 2.15 | YES | | NR crystals; high background | FAL.3T3.SLS.29/04/04 |
| FAL.3T3.LB.B2.07/05/04 | DF | AA61LB | 1.72 | 0.0084 | 0.269 | 3.01% | 7 | 1 | 0.9859 | 25.0, 17.0, 11.6, 7.9, 5.4, 3.6, 2.5, 1.7 | 1.47 | YES | | | FAL.3T3.SLS.07/05/04 |
| FAL.3T3.LB.B3.20/05/04 | DF | AA61LB | 1.19 | 0.0058 | 0.336 | 5.70% | 4 | 3 | 0.9404 | 25.0, 11.6, 5.4, 2.5, 1.2, 0.5, 0.3, 0.1 | 2.15 | YES | | | FAL.3T3.SLS.20/05/04 |

## TRIPHENYLTIN HYDROXIDE

| | | | | | | | | | | | | | | | |
|---|---|---|---|---|---|---|---|---|---|---|---|---|---|---|---|
| ***IIVS*** | | | | | | | | | | | | | | | |
| A1 | RF | AA61JR | 0.013 | 0.00004 | 0.456 | 8.54% | 0 | 1 | 0.9726 | 10.0, 1.0, 0.1, 0.01, 0.001, 0.0001, 0.00001, 0.000001 | 10 | RF | range finder | | SLS-A2 |
| B1 | DF | AA61JR | 0.0206 | 0.00006 | 0.434 | 2.34% | 3 | 4 | 0.9576 | 0.100, 0.0625, 0.0391, 0.0244, 0.0153, 0.00954, 0.00596, 0.00373 | 1.6 | YES | | | SLS-B5 |
| B2 | DF | AA61JR | 0.00547 | 0.00001 | 0.371 | 8.48% | 3 | 1 | 0.9569 | 0.100, 0.0625, 0.0391, 0.0244, 0.0153, 0.00954, 0.00596, 0.00373 | 1.6 | YES | | | SLS-B9 |
| B3 | DF | AA61JR | 0.0184 | 0.00005 | 0.367 | 0.57% | 3 | 4 | 0.9073 | 0.100, 0.0625, 0.0391, 0.0244, 0.0153, 0.00954, 0.00596, 0.00373 | 1.6 | YES | | | SLS-B10 |
| ***ECBC*** | | | | | | | | | | | | | | | |
| AA61LL-A1 | RF | AA61LL | 0.0132 | 0.00004 | 0.297 | 4.91% | 1 | 2 | 0.9825 | 10, 1, 0.1, 0.01, 0.001, 0.0001, 0.00001, 0.000001 | 10 | RF | range finder | | SLS-P7 |
| AA61LL-B1 | DF | AA61LL | 0.0258 | 0.00007 | 0.569 | 0.10% | 2 | 6 | 0.9539 | 0.100, 0.0465, 0.0216, 0.0101, 0.0047, 0.0022, 0.0010, 0.0005 | 2.15 | YES | | | SLS-P24 |

# 3T3 NRU Reference Substance Data

| Experiment ID 3T3 Cells | Assay Type[1] | Substance ID | $IC_{50}$ (ug/mL) | $IC_{50}$ (mM) | Mean VC OD[2] | Difference of right/left VC from mean VC[3] | Number of Points 0 - 50 %[4] | Number of Points 50 - 100 %[5] | $R^2$ [6] | Exposure Concentrations (ug/mL)[7] | Dilution Factor[8] | Acceptable Tests[9] | Rationale for Unacceptability | Notes | PC ID |
|---|---|---|---|---|---|---|---|---|---|---|---|---|---|---|---|
| AA61LL-B2 | DF | AA61LL | 0.0296 | 0.00008 | 0.519 | 1.61% | 2 | 5 | 0.9359 | 0.100, 0.0465, 0.0216, 0.0101, 0.0047, 0.0022, 0.0010, 0.0005 | 2.15 | YES | | | SLS-P26 |
| AA61LL-B3 | DF | AA61LL | 0.0212 | 0.00006 | 0.486 | 8.28% | 2 | 6 | 0.9428 | 0.100, 0.0465, 0.0216, 0.0101, 0.0047, 0.0022, 0.0010, 0.0005 | 2.15 | YES | | | SLS-P28 |
| ***FRAME*** | | | | | | | | | | | | | | | |
| FAL.3T3.GG.A1.01/04/04 | RF | AA61GG | 0.0143 | 0.00004 | 0.267 | 9.46% | 3 | 5 | 0.9563 | 10.0, 1.0, 0.1, 0.01, 0.001, 0.0001, 0.00001, 0.000001, | 10 | RF | range finder | | FAL.3T3.SLS.01/04/04 |
| FAL.3T3.GG.B1.29/04/04 | DF | AA61GG | 0.00286 | 0.00001 | 0.239 | 5.43% | 1 | 1 | 0.9869 | 0.100, 0.047, 0.022, 0.010, 0.0047, 0.0022, 0.0010, 0.0005 | 2.15 | YES | | | FAL.3T3.SLS.29/04/04 |
| FAL.3T3.GG.B2.07/05/04 | DF | AA61GG | 0.0314 | 0.00009 | 0.340 | 1.06% | 1 | 1 | 0.7735 | 0.100, 0.0233, 0.0108, 0.0050, 0.0023, 0.0011, 0.0005, 0.0002 | 2.15 | YES | | | FAL.3T3.SLS.07/05/04 |
| FAL.3T3.GG.B3.20/05/04 | DF | AA61GG | 0.0438 | 0.00012 | 0.367 | 1.82% | 2 | 6 | 0.8325 | 0.100, 0.047, 0.022, 0.010, 0.0047, 0.0022, 0.0010, 0.0005 | 2.15 | YES | | | FAL.3T3.SLS.20/05/04 |

## VALPROIC ACID

| | | | | | | | | | | | | | | | |
|---|---|---|---|---|---|---|---|---|---|---|---|---|---|---|---|
| ***IIVS*** | | | | | | | | | | | | | | | |
| A1 | RF | AA61MZ | 665 | 4.614 | 0.415 | 7.61% | 1 | 2 | 0.8257 | 1000, 100, 10, 1, 0.1, 0.01, 0.001, 0.0001 | 10 | RF | range finder | small immiscible droplets initially coated insides of dilution tube in the highest 2X solution | SLS-A2 |
| B1 | DF | AA61MZ | 574 | 3.981 | 0.353 | 10.44% | 3 | 4 | 0.6749 | 2000, 1333, 889, 593, 395, 263, 176, 117 | 1.5 | YES | | ppt in 2X C1-C2; test article adherred to glass pipettes upon transference to the 8-well reservoir | SLS-B6 |
| B2 | DF | AA61MZ | NA | NA | 0.372 | 15.70% | 0 | 4 | NA | 2000, 1333, 889, 593, 395, 263, 176, 117 | 1.5 | NO | no points between 0-50%; %VC difference >15; no toxicity detected | ppt in 2X C1 | SLS-B9 |
| B3 | DF | AA61MZ | NA | NA | 0.354 | 4.99% | 0 | 6 | NA | 2000, 1333, 889, 593, 395, 263, 176, 117 | 1.5 | NO | no points between 0-50% | ppt in 2X C1-C4 | SLS-B10 |
| B4 | DF | AA61MZ | NA | NA | 0.366 | 1.91% | 0 | 3 | NA | 2000, 1333, 889, 593, 395, 263, 176, 117 | 1.5 | NO | no points between 0-50% | ppt in 2X C1-C3 | SLS-18 |
| ***ECBC*** | | | | | | | | | | | | | | | |
| AA61JJ-A1 | RF | AA61JJ | 723 | 5.012 | 0.252 | 3.67% | 1 | 3 | 0.8319 | 1000, 100, 10, 1, 0.1, 0.01, 0.001, 0.0001 | 10 | RF | range finder | | SLS-P9 |
| AA61JJ-B1 | DF | AA61JJ | 624 | 4.325 | 0.537 | 3.43% | 4 | 2 | 0.9027 | 2000, 1361, 926, 630, 428, 291, 198, 135 | 1.47 | YES | | highest 2X solution clear, oily, & orange; DMSO < 0.5%; no diff. in JJ-B2 & JJ-B3 when compared to JJ-B1 (no ppt) | SLS-P26 |
| AA61JJ-B2 | DF | AA61JJ | 519 | 3.598 | 0.433 | 11.56% | 3 | 4 | 0.8624 | 2000, 1361, 926, 630, 428, 291, 198, 135 | 1.47 | YES | | ppt in 2X C1 - C5; oily; no diff. in JJ-B2 & JJ-B3 when compared to JJ-B1 (no ppt) | SLS-P28 |
| AA61JJ-B3 | DF | AA61JJ | 499 | 3.460 | 0.379 | 5.14% | 4 | 4 | 0.9240 | 2000, 1361, 926, 630, 428, 291, 198, 135 | 1.47 | YES | | ppt in 2X C1 - C5; no diff. in JJ-B2 & JJ-B3 when compared to JJ-B1 (no ppt) | SLS-P30 |
| ***FRAME*** | | | | | | | | | | | | | | | |
| FAL.3T3.GK.A1.01/04/04 | RF | AA61GK | NA | NA | 0.280 | 5.02% | 0 | 1 | NA | 1000, 100, 10, 1, 0.1, 0.01, 0.001, 0.0001 | 10 | RF | range finder | | FAL.3T3.SLS.01/04/04 |
| FAL.3T3.GK.B1.29/04/04 | DF | AA61GK | 1660 | 11.535 | 0.228 | 7.54% | 1 | 2 | 0.7855 | 2500, 1163, 541, 252, 117, 54.4, 25.3, 11.8 | 2.15 | YES | | | FAL.3T3.SLS.29/04/04 |
| FAL.3T3.GK.B2.07/05/04 | DF | AA61GK | 1760 | 12.219 | 0.284 | 7.69% | 1 | 2 | 0.4313 | 2500, 1163, 541, 252, 117, 54.4, 25.3, 11.8 | 2.15 | YES | | | FAL.3T3.SLS.07/05/04 |

# 3T3 NRU Reference Substance Data

| Experiment ID 3T3 Cells | Assay Type[1] | Substance ID | $IC_{50}$ (ug/mL) | $IC_{50}$ (mM) | Mean VC OD[2] | Difference of right/left VC from mean VC[3] | Number of Points 0 - 50 %[4] | Number of Points 50 - 100 %[5] | $R^2$ [6] | Exposure Concentrations (ug/mL)[7] | Dilution Factor[8] | Acceptable Tests[9] | Rationale for Unacceptability | Notes | PC ID |
|---|---|---|---|---|---|---|---|---|---|---|---|---|---|---|---|
| FAL.3T3.GK.B3.20/05/04 | DF | AA61GK | 2000 | 13.837 | 0.337 | 0.94% | 1 | 2 | 0.5501 | 2500, 1701, 1157, 787, 535, 364, 248, 169 | 1.47 | YES | | | FAL.3T3.SLS.20/05/04 |
| **VERAPAMIL HCL** | | | | | | | | | | | | | | | |
| ***IIVS*** | | | | | | | | | | | | | | | |
| A1 | RF | AA61NH | 38.1 | 0.078 | 0.266 | 2.04% | 0 | 0 | 0.5147 | 100, 10, 1, 0.1, 0.01, 0.001, 0.0001, 0.00001 | 10 | RF | range finder | solvent controls treated with 1% DMSO, rather than 0.5%. | SLS-A4 |
| B1 | DF | AA61NH | 35.9 | 0.073 | 0.480 | 1.13% | 1 | 2 | 0.9635 | 100, 71.4, 51.0, 36.4, 26.0, 18.6, 13.3, 9.49 | 1.4 | YES | | | SLS-B5 |
| B2 | DF | AA61NH | 43.7 | 0.089 | 0.352 | 7.48% | 2 | 2 | 0.9750 | 100, 71.4, 51.0, 36.4, 26.0, 18.6, 13.3, 9.49 | 1.4 | YES | | | SLS-B9 |
| B3 | DF | AA61NH | 37.1 | 0.075 | 0.359 | 12.81% | 1 | 5 | 0.9378 | 100, 71.4, 51.0, 36.4, 26.0, 18.6, 13.3, 9.49 | 1.4 | YES | | | SLS-B10 |
| ***ECBC*** | | | | | | | | | | | | | | | |
| AA61LY-A1 | RF | AA61LY | 15.1 | 0.031 | 0.287 | 1.45% | 0 | 6 | 0.9401 | 1000, 100, 10, 1, 0.1, 0.01, 0.001, 0.0001 | 10 | RF | range finder | ppt in 2X C1 | SLS-P14 |
| AA61LY-B1 | DF | AA61LY | 26.7 | 0.054 | 0.347 | 12.36% | 3 | 4 | 0.9375 | 100, 68.0, 46.3, 31.5, 21.4, 14.6, 9.91, 6.74 | 1.47 | YES | | | SLS-P34 |
| AA61LY-B2 | DF | AA61LY | 38.3 | 0.078 | 0.523 | 5.85% | 2 | 4 | 0.9789 | 100, 68.0, 46.3, 31.5, 21.4, 14.6, 9.91, 6.74 | 1.47 | YES | | | SLS-P36 |
| AA61LY-B3 | DF | AA61LY | 31.6 | 0.064 | 0.444 | 15.05% | 3 | 4 | 0.9643 | 100, 68.0, 46.3, 31.5, 21.4, 14.6, 9.91, 6.74 | 1.47 | YES | | potential volatility problem | SLS-P38 |
| ***FRAME*** | | | | | | | | | | | | | | | |
| FAL.3T3.MC.A1.10.09.04 | RF | AA61MC | 62.8 | 0.128 | 0.369 | 12.62% | 2 | 0 | 0.9133 | 1000, 100, 10, 1, 0.1, 0.01, 0.001, 0.0001 | 10 | RF | range finder; no points between 50 - 100% | ppt in 2X C1 and 1X C1 | FAL.3T3.SLS.10.09.04 |
| FAL.3T3.MC.B1.16.09.04 | DF | AA61MC | 48.1 | 0.098 | 0.277 | 7.34% | 0 | 1 | 0.9557 | 100, 68.0, 46.3, 31.5, 21.4, 14.6, 9.91, 6.74 | 1.47 | NO | no points between 0 - 50% | ppt in 2X C1 | FAL.3T3.SLS.16.09.04 |
| FAL.3T3.MC.B2.23.09.04 | DF | AA61MC | 23.1 | 0.047 | 0.201 | 2.68% | 3 | 0 | 0.8298 | 100, 82.6, 68.3, 56.4, 46.7, 38.6, 31.9, 26.3 | 1.21 | NO | no points between 50 - 100% | 1.21 dilution factor doesn't affect outcome since no values > 50% viability; ppt in 2X C1; outlier removed by SD | FAL.3T3.SLS.23.09.04 |
| FAL.3T3.MC.B3.14.10.04.04 | DF | AA61MC | 32.7 | 0.067 | 0.268 | 12.64% | 2 | 1 | 0.9323 | 50.0, 34.0, 23.1, 15.7, 10.7, 7.28, 4.96, 3.37 | 1.47 | YES | | ppt in 2X C1 | FAL.3T3.SLS.14.10.04 |
| FAL.3T3.MC.B4.21.10.04 | DF | AA61MC | 36.1 | 0.073 | 0.169 | 0.30% | 1 | 1 | 0.1575 | 50.0, 34.0, 23.1, 15.7, 10.7, 7.28, 4.96, 3.37 | 1.47 | YES | | ppt in 2X C1; very high viability values for C3-C7 | FAL.3T3.SLS.21.10.04 |
| FAL.3T3.MC.B5.04.11.04 | DF | AA61MC | 34.9 | 0.071 | 0.199 | 8.03% | 2 | 1 | 0.6920 | 75.0, 51.0, 34.7, 23.6, 16.1, 10.9, 7.43, 5.06 | 1.47 | YES | | | FAL.3T3.SLS.04.11.04 |
| **XYLENE** | | | | | | | | | | | | | | | |
| ***IIVS*** | | | | | | | | | | | | | | | |
| A1 | RF | AA61MA | NA | NA | 0.415 | 0.04% | 0 | 1 | NA | 1000, 100, 10, 1, 0.1, 0.01, 0.001, 0.0001 | 10 | RF | range finder | ppt in 2X C1 | SLS-A3 |
| B1 | DF | AA61MA | 728 | 6.855 | 0.371 | 3.21% | 5 | 3 | 0.9121 | 2500, 1923, 1479, 1138, 875, 673, 518, 398 | 1.3 | YES | | | SLS-B6 |
| B2 | DF | AA61MA | 809 | 7.621 | 0.371 | 4.51% | 5 | 3 | 0.9567 | 2500, 1923, 1479, 1138, 875, 673, 518, 398 | 1.3 | YES | | ppt in 2X C1 | SLS-B9 |
| B3 | DF | AA61MA | 635 | 5.984 | 0.311 | 4.85% | 6 | 2 | 0.9597 | 2500, 1923, 1479, 1138, 875, 673, 518, 398 | 1.3 | YES | | | SLS-B10 |
| ***ECBC*** | | | | | | | | | | | | | | | |
| AA61GM-A1 | RF | AA61GM | NA | NA | 0.232 | 5.68% | 0 | 5 | NA | 1000, 100, 10, 1, 0.1, 0.01, 0.001, 0.0001 | 10 | RF | range finder | | SLS-12 |
| AA61GM-B1 | DF | AA61GM | NA | NA | 0.754 | 7.45% | 0 | 8 | NA | 3000, 2479, 2049, 1693, 1400, 1157, 956, 790 | 1.21 | NO | PC failed; no points between 0 - 50% | test could pass due to dilution factor | SLS-P61 |
| AA61GM-B2 | DF | AA61GM | NA | NA | 0.624 | 4.21% | 0 | 7 | NA | 4000, 3306, 2732, 2258, 1866, 1542, 1275, 1053 | 1.21 | NO | no points between 0 - 50% | test could pass due to dilution factor | SLS-P63 |

# 3T3 NRU Reference Substance Data

| Experiment ID 3T3 Cells | Assay Type[1] | Substance ID | $IC_{50}$ (ug/mL) | $IC_{50}$ (mM) | Mean VC OD[2] | Difference of right/left VC from mean VC[3] | Number of Points 0 - 50 %[4] | Number of Points 50 - 100 %[5] | $R^2$ [6] | Exposure Concentrations (ug/mL)[7] | Dilution Factor[8] | Acceptable Tests[9] | Rationale for Unacceptability | Notes | PC ID |
|---|---|---|---|---|---|---|---|---|---|---|---|---|---|---|---|
| AA61GM-B3 | DF | AA61GM | NA | NA | 0.553 | 15.44% | 2 | 6 | NA | 4000, 3306, 2732, 2258, 1866, 1542, 1275, 1053 | 1.21 | NO | can't properly determine points between 0 - 100% | roller coaster toxicity curve; ppt in 2X C1-C8 (oily) | SLS-P73 |
| ***FRAME*** | | | | | | | | | | | | | | | |
| FAL.3T3.JG.A1.28.05.04 | RF | AA61JG | NA | NA | 0.327 | 3.31% | 0 | 3 | 0.6108 | 1000, 100, 10, 1, 0.1, 0.01, 0.001, 0.0001 | 10 | RF | range finder | | FAL.3T3.SLS.28.05.04 |
| FAL.3T3.JG.B1.04.06.04 | DF | AA61JG | NA | NA | 0.250 | 0.50% | 0 | 0 | NA | 2500, 1163, 541, 252, 117, 54.4, 25.3, 11.8 | 2.15 | NO | no points between 0 - 100% | ppt in 2X C1-C3; | FAL.3T3.SLS.04.06.04 |
| FAL.3T3.JG.B2.17.06.04 | DF | AA61JG | NA | NA | 0.448 | 0.74% | 0 | NA | NA | 2500, 1163, 541, 252, 117, 54.4, 25.3, 11.8 | 2.15 | NO | no points between 0 - 100% | ppt in 2X C1-C3; toxicity did not reach 50% | FAL.3T3.SLS.17.06.04 |
| FAL.3T3.JG.B2.24.06.04 (should be B3) | DF | AA61JG | NA | NA | 0.396 | 9.40% | 0 | 5 | 0.1548 | 2500, 1163, 541, 252, 117, 54.4, 25.3, 11.8 | 2.15 | NO | no points between 0 - 50% | no toxicity detected; SD ends testing | FAL.3T3.SLS.24.06.04 |

Abbreviations: ppt=Precipitate; SD=Study Director; RF=Range Finder; DF=Definitive Test; PC=Positive Control; C1 - C8=Concentration series applied to the the cells. C1 is the highest concentration and C8 is lowest; NA=Not Available; RC=Registry of Cytotoxicity; 2X=Two times the concentration applied to the cells; VC=Vehicle Control; R2=Coefficient of Determination; OD=Optical Density; ID=Identification. Substance ID was the code assigned by the chemical distributor (BioReliance Corp.). Experiment ID and PC ID are test identification numbers assigned by the cytotoxicity testing laboratory.

[1] Range finder or definitive test
[2] Mean OD value for all VC wells in test plate
[3] Difference of right and left VC column of wells in the test plate
[4] % Viability values between 0 and 50% viability; test acceptance criterion. Phase Ib used the range of 10 -50%.
[5] % Viability values between 50 and 100% viability; test acceptance criterion. Phase Ib used the range of 50 - 90%.
[6] Calculated value from the Prism® software
[7] Reference substance concentrations applied to the cells
[8] Step-wise dilution factor used to determine reference substance exposure concentrations
[9] Determination for whether test meets or doesn't meet test acceptance criteria; not applied to RF tests
Shaded boxes identify values that do not meet the specific test acceptance criteria

# Appendix I2

## NHK NRU Reference Substance Data

***[This Page Intentionally Left Blank]***

# NHK NRU Reference Substance Data

| Experiment ID NHK Cells | Assay Type[1] | Substance ID | $IC_{50}$ (ug/mL) | $IC_{50}$ (mM) | Mean VC OD[2] | Difference of right/left VC from mean VC[3] | Number of Points 0 - 50 %[4] | Number of Points 50 - 100 %[5] | $R^2$ [6] | Exposure Concentrations (ug/mL)[7] | Dilution Factor[8] | Acceptable Tests[9] | Rationale for Unacceptability | Notes | PC ID |
|---|---|---|---|---|---|---|---|---|---|---|---|---|---|---|---|
| **ACETAMINOPHEN** | | | | | | | | | | | | | | | |
| ***IIVS*** | | | | | | | | | | | | | | | |
| A1 | RF | AA61HU | 1450 | 9.560 | 0.525 | 0.11% | 0 | 1 | 0.5444 | 1000, 100, 10, 1, 0.1, 0.01, 0.001, 0.0001 | 10 | RF | range finder; no points between 0 - 50% | | SLS-A5-N040401A |
| B1 | DF | AA61HU | 541 | 3.576 | 0.678 | 1.54% | 5 | 3 | 0.9557 | 2500, 1786, 1276, 911, 651, 465, 332, 237 | 1.4 | YES | | | SLS-B12-N041022B |
| B2 | DF | AA61HU | 661 | 4.370 | 0.622 | 9.36% | 5 | 3 | 0.9738 | 2500, 1786, 1276, 911, 651, 465, 332, 237 | 1.4 | YES | | | SLS-B13-N041029B |
| B3 | DF | AA61HU | 512 | 3.384 | 0.777 | 0.82% | 5 | 3 | 0.9526 | 2500, 1786, 1276, 911, 651, 465, 332, 237 | 1.4 | YES | | | SLS-B14-N041030A |
| ***ECBC*** | | | | | | | | | | | | | | | |
| AA61LR-A1 | RF | AA61LR | 196 | 1.299 | 0.972 | 0.43% | 1 | 6 | 0.8186 | 1000, 100, 10, 1, 0.1, 0.01, 0.001, 0.0001 | 10 | RF | range finder | | SLS-P19 |
| AA61LR-B1 | DF | AA61LR | 467 | 3.086 | 0.731 | 1.13% | 3 | 5 | 0.9694 | 4000, 1861, 865, 403, 187, 87.1, 40.5, 18.8 | 2.15 | YES | | | SLS-P41 |
| AA61LR-B2 | DF | AA61LR | 586 | 3.877 | 0.704 | 2.81% | 3 | 4 | 0.9642 | 4000, 1861, 865, 403, 187, 87.1, 40.5, 18.8 | 2.15 | YES | | | SLS-P43 |
| AA61LR-B3 | DF | AA61LR | 621 | 4.106 | 1.019 | 4.94% | 3 | 4 | 0.9495 | 4000, 1861, 865, 403, 187, 87.1, 40.5, 18.8 | 2.15 | YES | | | SLS-P45 |
| ***FRAME*** | | | | | | | | | | | | | | | |
| FAL.NHK.PY.A1.24.09.04 | RF | AA61PY | 137 | 0.907 | 0.578 | 8.76% | 1 | 3 | 0.6981 | 1000, 100, 10, 1.0, 0.1, 0.01, 0.001, 0.0001 | 10 | RF | range finder | | FAL.NHK.SLS.24.09.03 |
| FAL.NHK.PY.B1.01.10.04 | DF | AA61PY | 1130 | 7.489 | 1.026 | 8.47% | 2 | 5 | 0.9753 | 2500, 1163, 541, 252, 117, 54.4, 25.3, 11.8 | 2.15 | NO | PC failed | | FAL.NHK.SLS.01.10.04 |
| FAL.NHK.PY.B2.07.10.04 | DF | AA61PY | 421 | 2.783 | 0.575 | 3.20% | 4 | 3 | 0.6590 | 2500, 1163, 541, 252, 117, 54.4, 25.3, 11.8 | 2.15 | YES | | C1 shows high toxicity; should this point be removed & new calc. be made? | FAL.NHK.SLS.07.10.03 |
| FAL.NHK.PY.B3.05.11.04 | DF | AA61PY | 541 | 3.576 | 0.418 | 10.47% | 3 | 1 | 0.9335 | 2500, 1163, 541, 252, 117, 54.4, 25.3, 11.8 | 2.15 | YES | | outlier removed by SD | FAL.NHK.SLS.05.11.04 |
| FAL.NHK.PY.B4.10.11.04 | DF | AA61PY | 380 | 2.514 | 1.156 | 1.74% | 3 | 5 | 0.7537 | 2500, 1163, 541, 252, 117, 54.4, 25.3, 11.8 | 2.15 | YES | | | FAL.NHK.SLS.10.11.04 |
| **ACETONITRILE** | | | | | | | | | | | | | | | |
| ***IIVS*** | | | | | | | | | | | | | | | |
| A1 | RF | AA61GF | 43700 | 1063.376 | 0.479 | 4.37% | 0 | 4 | 0.5946 | 10000, 1000, 100, 10, 1, 0.1, 0.01, 0.001 | 10 | RF | range finder; no points between 0 - 50% | | SLS-A1-N040317B |
| B1 | DF | AA61GF | 6810 | 165.839 | 0.494 | 99.86% | 3 | 2 | 0.9841 | 200000, 111111, 61728, 34294, 19052, 10584, 5880, 3267 | 1.8 | NO | %VC difference >15 | Left VC was removed from calc. due to volatility | SLS-B8-N040819A |
| B2 | DF | AA61GF | 9730 | 236.966 | 0.624 | 3.54% | 3 | 2 | 0.9960 | 200000, 111111, 61728, 34294, 19052, 10584, 5880, 3267 | 1.8 | YES | | plate seal used; SD removed top dose from analysis since only 4 wells of 8 were treated | SLS-B10-N040903A |
| B3 | DF | AA61GF | 9230 | 224.743 | 0.693 | 4.62% | 3 | 2 | 0.9964 | 200000, 111111, 61728, 34294, 19052, 10584, 5880, 3267 | 1.8 | YES | | plate seal used | SLS-B11-N040904H |
| B4 | DF | AA61GF | 8910 | 217.114 | 0.605 | 5.04% | 3 | 3 | 0.9878 | 40000, 25000,15625, 9766, 6104, 3815, 2384, 1490 | 1.6 | YES | | | SLS-B12-N041022B |
| ***ECBC*** | | | | | | | | | | | | | | | |
| AA61PH-A1 | RF | AA61PH | NA | NA | 0.635 | 1.57% | 0 | 5 | NA | 10000, 1000, 100, 10, 1, 0.1, 0.01, 0.001 | 10 | RF | range finder | no toxicity detected | SLS-P1 |
| AA61PH-A2 | RF | AA61PH | NA | NA | 0.231 | 97.27% | 3 | 1 | NA | 200000, 20000, 2000, 200, 20, 2, 0.2, 0.02 | 10 | RF | range finder | probable volatility problem | SLS-P3 |
| AA61PH-B1 | DF | AA61PH | 22600 | 551.679 | 0.911 | 13.28% | 1 | 3 | 0.8640 | 50000, 23256, 10817, 5031, 2340, 1088, 506, 235 | 2.15 | YES | | | SLS-P7 |

# NHK NRU Reference Substance Data

| Experiment ID NHK Cells | Assay Type[1] | Substance ID | $IC_{50}$ (ug/mL) | $IC_{50}$ (mM) | Mean VC OD[2] | Difference of right/left VC from mean VC[3] | Number of Points 0 - 50 %[4] | Number of Points 50 - 100 %[5] | $R^2$ [6] | Exposure Concentrations (ug/mL)[7] | Dilution Factor[8] | Acceptable Tests[9] | Rationale for Unacceptability | Notes | PC ID |
|---|---|---|---|---|---|---|---|---|---|---|---|---|---|---|---|
| AA61PH-B2 | DF | AA61PH | 31800 | 775.688 | 0.865 | 21.14% | 1 | 5 | 0.8532 | 50000, 34014, 23139, 15740, 10708, 7284, 4955, 3371 | 1.47 | NO | %VC difference > 15 | possible volatility problem | SLS-P9 |
| AA61PH-B3(sealer) | DF | AA61PH | 7110 | 173.255 | 0.561 | 4.36% | 6 | 2 | 0.9839 | 50000, 34014, 23139, 15740, 10708, 7284, 4955, 3371 | 1.47 | YES | | | SLS-P17 |
| AA61PH-B4(sealer) | DF | AA61PH | 7050 | 171.667 | 0.643 | 1.06% | 5 | 2 | 0.9812 | 50000, 34014, 23139, 15740, 10708, 7284, 4955, 3371 | 1.47 | YES | | | SLS-P18 |
| AA61PH-B5 | DF | AA61PH | 6710 | 163.564 | 0.484 | 0.05% | 5 | 2 | 0.9783 | 40000, 27211, 18511, 12592, 8566, 5827, 3964, 2697 | 1.47 | YES | | | SLS-P24 |
| ***FRAME*** | | | | | | | | | | | | | | | |
| FAL.NHK.PL.A1.18.02.04 | RF | AA61PL | NA | NA | 0.107 | 11.79% | 0 | 0 | NA | 10000, 1000, 100, 10, 1, 0.1, 0.01, 0.001 | 10 | RF | range finder | no values calculated by PRISM; % viability are "nonsense" values | FAL.NHK.SLS.18.02.04 |
| FAL.NHK.PL.26.02.04 | RF | AA61PL | 8220 | 200.303 | 0.138 | 32.31% | 1 | 0 | 0.4136 | 100000, 10000, 1000, 100, 10, 1, 0.1, 0.01 | 10 | RF | range finder | chem. needs to be tested at high conc. but have volatility problems even w/plate sealer | FAL.NHK.SLS/NB.26.02 .03 |
| FAL.NHK.PL.B1.25.03.04 | DF | AA61PL | 8790 | 214.135 | 0.502 | 3.22% | 1 | 2 | 0.9338 | 25000, 7937, 2520, 800, 254, 80.6, 25.6, 8.12 | 3.15 | YES | | did SD use plate film cover? | FAL.NHK.SLS.25.03.03 |
| FAL.NHK.PL.B3.26.03.04 | DF | AA61PL | 7480 | 182.258 | 0.549 | 4.16% | 2 | 0 | 0.8428 | 25000, 7911, 2504, 792, 251, 79.3, 25.1, 7.9 | 3.16 | NO | no points between 50-100% | wrong solvent reported but correct one used (correction by SD); pts between 50 - 100% but several > 100% | FAL.NHK.SLS.26.03.04 |
| FAL.NHK.PL.B4.25.04.04 | DF | AA61PL | 12400 | 302.473 | 0.860 | 5.09% | 1 | 1 | 0.9371 | 25000, 11628, 5408, 2516, 1170, 544, 253, 118 | 2.15 | YES | | | FAL.NHK.SLS.25.04.04 |
| FAL.NHK.PL.B5.28.04.04 | DF | AA61PL | 8020 | 195.293 | 0.909 | 6.73% | 0 | 1 | 0.8109 | 25000, 7937, 2520, 800, 254, 80.6, 25.6, 8.12 | 3.15 | NO | no points between 0-50% | wells D3,D4,E3,E4 data removed by SD after NICEATM recomm. to review potential outliers; revised data eliminates point between 0-50% and test | FAL.NHK.SLS.28.04.03 |
| FAL.NHK.PL.B5.19.08.04(rb) should be B6 | DF | AA61PL | 10800 | 262.233 | 0.266 | 7.45% | 2 | 0 | 0.5395 | 25000, 11628, 5408, 2516, 1170, 544, 253, 118 | 2.15 | NO | PC failed; no points between 50-100% | | FAL.NHK.SLS-RB.19.08.04 |
| FAL.NHK.PL.B6.20.08.04 should be B7 | DF | AA61PL | 9270 | 225.781 | 0.824 | 2.53% | 2 | 2 | 0.9559 | 25000, 11628, 5408, 2516, 1170, 544, 253, 118 | 2.15 | YES | | | FAL.NHK.SLS.20.08.04 |

## ACETYLSALICYLIC ACID

| | | | | | | | | | | | | | | | |
|---|---|---|---|---|---|---|---|---|---|---|---|---|---|---|---|
| ***IIVS*** | | | | | | | | | | | | | | | |
| A1 | RF | AA61HM | 552 | 3.064 | 0.748 | 3.52% | 1 | 4 | 0.9540 | 1000, 100, 10, 1, 0.1, 0.01, 0.001, 0.0001 | 10 | RF | range finder | | SLS-A3-N040331A |
| B1 | DF | AA61HM | 509 | 2.826 | 0.653 | 1.76% | 5 | 3 | 0.9836 | 2000, 1429, 1020, 729, 521, 372, 266, 190 | 1.4 | YES | | | SLS-B8-N040819A |
| B2 | DF | AA61HM | 596 | 3.306 | 0.599 | 5.27% | 4 | 4 | 0.9664 | 2000, 1429, 1020, 729, 521, 372, 266, 190 | 1.4 | YES | | | SLS-B9-N040820A |
| B3 | DF | AA61HM | 438 | 2.428 | 0.607 | 3.62% | 5 | 3 | 0.9107 | 2000, 1429, 1020, 729, 521, 372, 266, 190 | 1.4 | YES | | | SLS-B10-N040903A |
| ***ECBC*** | | | | | | | | | | | | | | | |
| AA61ME-A1 | RF | AA61ME | 631 | 3.501 | 0.916 | 2.80% | 1 | 7 | 0.9492 | 1000, 100, 10, 1, 0.1, 0.01, 0.001, 0.0001 | 10 | RF | range finder | ppt in 2X C2 and 1X C1 | SLS-P14 |
| AA61ME-B1 | DF | AA61ME | 614 | 3.406 | 0.765 | 3.36% | 3 | 5 | 0.9409 | 1500, 1020, 694, 472, 321, 219, 149, 101 | 1.47 | YES | | | SLS-P53 |
| AA61ME-B2 | DF | AA61ME | 653 | 3.624 | 0.791 | 2.60% | 3 | 5 | 0.9719 | 1500, 1020, 694, 472, 321, 219, 149, 101 | 1.47 | YES | | | SLS-P54 |
| AA61ME-B3 | DF | AA61ME | 627 | 3.477 | 0.983 | 0.71% | 3 | 5 | 0.9596 | 1500, 1020, 694, 472, 321, 219, 149, 101 | 1.47 | YES | | | SLS-P56 |
| ***FRAME*** | | | | | | | | | | | | | | | |

# NHK NRU Reference Substance Data

| Experiment ID NHK Cells | Assay Type[1] | Substance ID | $IC_{50}$ (ug/mL) | $IC_{50}$ (mM) | Mean VC OD[2] | Difference of right/left VC from mean VC[3] | Number of Points 0 - 50 %[4] | Number of Points 50 - 100 %[5] | $R^2$ [6] | Exposure Concentrations (ug/mL)[7] | Dilution Factor[8] | Acceptable Tests[9] | Rationale for Unacceptability | Notes | PC ID |
|---|---|---|---|---|---|---|---|---|---|---|---|---|---|---|---|
| FAL.NHK.JA.A1.14.05.04 | RF | AA61JA | 340 | 1.889 | 0.764 | 4.39% | 1 | 2 | 0.9410 | 1000, 100, 10, 1, 0.1, 0.01, 0.001, 0.0001 | 10 | RF | range finder | | FAL.NHK.SLS.14.05.03 |
| FAL.NHK.JA.B1.08.10.04 | DF | AA61JA | 719 | 3.993 | 0.722 | 0.54% | 2 | 3 | 0.9913 | 2500, 1163, 541, 252, 117, 54.4, 25.3, 11.8 | 2.15 | YES | | | FAL.NHK.SLS.08.10.03 |
| FAL.NHK.JA.B2.22.10.04 | DF | AA61JA | 778 | 4.318 | 0.715 | 2.72% | 3 | 5 | 0.9753 | 2500, 1701, 1157, 787, 535, 364, 248, 169 | 1.47 | YES | | | FAL.NHK.SLS.22.10.04 (MO) |
| FAL.NHK.JA.B3.28.10.04 | DF | AA61JA | 586 | 3.253 | 0.635 | 3.07% | 4 | 4 | 0.9817 | 2500, 1701, 1157, 787, 535, 364, 248, 169 | 1.47 | YES | | | FAL.NHK.SLS.28.10.04 |

## AMINOPTERIN

| | | | | | | | | | | | | | | | |
|---|---|---|---|---|---|---|---|---|---|---|---|---|---|---|---|
| ***IIVS*** | | | | | | | | | | | | | | | |
| A2 | RF | AA61JD | 1480 | 3.360 | 0.809 | 5.29% | 0 | 6 | 0.7064 | 1000, 100, 10, 1, 0.1, 0.01, 0.001, 0.0001 | 10 | RF | range finder | | SLS-A2 |
| B1 | DF | AA61JD | 561 | 1.274 | 0.476 | 6.77% | 2 | 6 | 0.9289 | 1000, 714, 510, 364, 260, 186, 133, 94.9 | 1.40 | YES | | evidence of precipitate at highest dose | SLS-B1 |
| B2 | DF | AA61JD | 661 | 1.501 | 0.328 | 4.35% | 2 | 6 | 0.9353 | 1000, 714, 510, 364, 260, 186, 133, 94.9 | 1.40 | YES | | evidence of precipitate at highest dose | SLS-B2 |
| B3 | DF | AA61JD | 986 | 2.239 | 0.34 | 6.44% | 0 | 5 | 0.9305 | 1000, 714, 510, 364, 260, 186, 133, 94.9 | 1.40 | NO | No points 0-50% | evidence of precipitate at highest dose | SLS-B3 |
| ***ECBC*** | | | | | | | | | | | | | | | |
| AA61MB-A1 | RF | AA61MB | 627 | 1.424 | 0.566 | 1.64% | 1 | 3 | 0.8101 | 1000, 100, 10, 1.0, 0.1, 0.01, 0.001, 0.0001 | 10 | RF | range finder | range finder | SLS-P4 |
| AA61MB-B1 | DF | AA61MB | 962 | 2.184 | 1.042 | 1.45% | 1 | 7 | 0.7701 | 1000, 680.3, 462.8, 314.8, 214.2, 145.7, 99.1, 67.4 | 1.47 | NO | low r2 | | SLS-P8 |
| AA61MB-B2 | DF | AA61MB | 718 | 1.630 | 0.914 | 0.84% | 3 | 5 | 0.8326 | 1200, 991.7, 819.6, 677.4, 559.8, 462.7, 382.4, 316.0 | 1.21 | YES | | | SLS-P10 |
| AA61MB-B3 | DF | AA61MB | 1080 | 2.452 | 0.778 | 2.61% | 1 | 7 | 0.7956 | 1200, 991.7, 819.6, 677.4, 559.8, 462.7, 382.4, 316 | 1.21 | YES | | | SLS-P12 |
| AA61MB-B4 | DF | AA61MB | 944 | 2.143 | 0.904 | 5% | 3 | 5 | 0.7754 | 1200, 991.7, 819.6, 677.4, 559.8, 462.7, 382.4, 316.0 | 1.21 | YES | | | SLS-P20 |
| ***FRAME*** | | | | | | | | | | | | | | | |
| FAL.NHK.PU.30.07.03 | RF | AA61PU | NA | NA | 1.355 | 3.29% | 0 | 8 | 0.0373 | 1000, 100, 10, 1, 0.1, 0.01, 0.001, 0.0001 | 10 | RF | range finder | solution is yellow and may bind to the cells thus affecting NRU | FAL.NHK.SLS.30.07.03 |
| FAL.NHK.PU.B1.07.08.03 | DF | AA61PU | 516 | 1.172 | 0.245 | 10.54% | 2 | 6 | 0.2733 | 1000, 680, 463, 314.8, 214.1, 145.6, 99.1, 67.4 | 1.47 | NO | low r2 | biphasic response | FAL.NHK.SLS.07.08.03 |
| FAL.NHK.PU.B2.13.08.03 | DF | AA61PU | NA | NA | 0.722 | 30.35% | 0 | 7 | NA | 1000, 680, 463, 314.8, 214.1, 145.6, 99.1, 67.4 | 1.47 | NO | PC failed; no points between 0 - 50%; no r2; %VC difference > 15 | SD rejects this assay; can't explain the variability of cell growth in the wells | FAL.NHK.SLS.13.08.03 |
| FAL.NHK.PU.B3.23.08.03 | DF | AA61PU | 366 | 0.831 | 0.408 | 5.58% | 3 | 5 | 0.8213 | 1000, 680, 463, 314.8, 214.1, 145.6, 99.1, 67.4 | 1.47 | NO | PC failed | | FAL.NHK.SLS.230803 |
| FAL.NHK.PU.B4.28.08.05 | DF | AA61PU | 593 | 1.346 | 0.470 | 8.87% | 2 | 6 | 0.7804 | 1000, 680, 463, 314.8, 214.1, 145.6, 99.1, 67.4 | 1.47 | YES | | challenging chemical; SMT accepts this test | FAL.NHK.SLS.280803 |
| FAL.NHK.PU.B5.05.09.03 | DF | AA61PU | 515 | 1.169 | 0.217 | 7.60% | 2 | 6 | 0.7145 | 1000, 680, 463, 314.8, 214.1, 145.6, 99.1, 67.4 | 1.47 | YES | | challenging chemical; SMT accepts this test | FAL.NHK.SLS.050903 |
| FAL.NHK.PU.B6.01.10.03 | DF | AA61PU | NA | NA | 1.373 | 5.40% | 0 | 8 | 0.0149 | 1000, 465, 216, 101, 46.8, 21.8, 10.1, 4.7 | 2.15 | NO | no points between 50 - 100%; low r2 | | FAL.NHK.SLS.01.10.03 |
| FAL.NHK.PU.B6.19.10.03 | DF | AA61PU | 157 | 0.356 | 0.170 | 1.73% | 0 | 7 | 0.4794 | 100, 46.5, 21.6, 10.1, 4.7, 2.2, 1.0, 0.47 | 2.15 | NO | low r2; no points between 0-50% | SD worked with wrong dilution range; wanted to start at 1000 | FAL.NHK.SLS.19.10.03 |
| FAL.NHK.PU.B7.23.10.03 | DF | AA61PU | 526 | 1.194 | 0.236 | 3.75% | 2 | 6 | 0.6618 | 1000, 680, 463, 314.8, 214.1, 145.6, 99.1, 67.4 | 1.47 | YES | | challenging chemical; SMT accepts this test | FAL.NHK.SLS.23.10.03 |
| FAL.NHK.PU.B8.24.10.03 | DF | AA61PU | 9950 | 22.591 | 0.869 | 1.69% | 1 | 7 | 0.2607 | 1000, 680, 463, 314.8, 214.1, 145.6, 99.1, 67.4 | 1.47 | NO | low r2 | | FAL.NHK.SLS.24.10.03 |
| FAL.NHK.PU.B9.07.11.03 | DF | AA61PU | 5400 | 12.260 | 0.385 | 2.23% | 1 | 7 | 0.1515 | 2000, 930, 433, 201, 94, 44, 20.2, 9.4 | 2.15 | NO | low r2 | | FAL.NHK.SLS.07.11.03 |

# NHK NRU Reference Substance Data

| Experiment ID NHK Cells | Assay Type[1] | Substance ID | $IC_{50}$ (ug/mL) | $IC_{50}$ (mM) | Mean VC OD[2] | Difference of right/left VC from mean VC[3] | Number of Points 0 - 50 %[4] | Number of Points 50 - 100 %[5] | $R^2$ [6] | Exposure Concentrations (ug/mL)[7] | Dilution Factor[8] | Acceptable Tests[9] | Rationale for Unacceptability | Notes | PC ID |
|---|---|---|---|---|---|---|---|---|---|---|---|---|---|---|---|
| **5-AMINOSALICYLIC ACID** | | | | | | | | | | | | | | | |
| ***IIVS*** | | | | | | | | | | | | | | | |
| A1 | RF | AA61GZ | 93.1 | 0.608 | 0.631 | 0.67% | 1 | 0 | 0.8972 | 1000, 100, 10, 1, 0.1, 0.01, 0.001, 0.0001 | 10 | RF | range finder | SD did not use data from the highest dose in Hill analyses due to the effects of the ppts; ppt in 2X C1 & 1X C1 | SLS-A3-N040331A |
| B1 | DF | AA61GZ | 41.7 | 0.272 | 0.548 | 2.71% | 6 | 2 | 0.9682 | 500, 313, 195, 122, 76.3, 47.7, 29.8, 18.6 | 1.6 | YES | | | SLS-B1-N040423A |
| B2 | DF | AA61GZ | 47.3 | 0.309 | 0.557 | 3.54% | 5 | 2 | 0.9749 | 500, 313, 195, 122, 76.3, 47.7, 29.8, 18.6 | 1.6 | YES | | | SLS-B2-N040424A |
| B3 | DF | AA61GZ | 57.3 | 0.374 | 0.438 | 9.57% | 3 | 3 | 0.9328 | 200, 125, 78.1, 48.8, 30.5, 19.1, 11.9 ,7.45 | 1.6 | YES | | flattening of the curve at 35% viability | SLS-B3-N040506A |
| ***ECBC*** | | | | | | | | | | | | | | | |
| AA61KD-A1 | RF | AA61KD | NA | NA | 0.856 | 3.85% | 1 | 4 | NA | 1000, 100, 10, 1, 0.1, 0.01, 0.001, 0.0001 | 10 | RF | range finder | ppt in 1X C1 | SLS-P12 |
| AA61KD-B1 | DF | AA61KD | 34.8 | 0.228 | 0.529 | 0.76% | 4 | 1 | 0.9692 | 500, 233, 108, 50.3, 23.4, 10.9, 5.06, 2.35 | 2.15 | YES | | | SLS-P32 |
| AA61KD-B2 | DF | AA61KD | 32.4 | 0.212 | 0.539 | 0.94% | 5 | 2 | 0.9214 | 150, 102, 69.4, 47.2, 32.1, 21.9, 14.9, 10.1 | 1.47 | YES | | | SLS-P34 |
| AA61KD-B3 | DF | AA61KD | 22.5 | 0.147 | 0.401 | 3.53% | 6 | 2 | 0.9529 | 150, 102, 69.4, 47.2, 32.1, 21.9, 14.9, 10.1 | 1.47 | YES | | | SLS-P36 |
| ***FRAME*** | | | | | | | | | | | | | | | |
| FAL.NHK.PA.A1.14.05.04 | RF | AA61PA | 35.6 | 0.232 | 0.784 | 2.17% | 2 | 0 | 0.8834 | 1000, 100, 10, 1, 0.1, 0.01, 0.001, 0.0001 | 10 | RF | range finder | ppt in 1X C1; NR taken up by C1 ppt | FAL.NHK.SLS.14.05.03 |
| FAL.NHK.PA.B1.19.08.04 rb | DF | AA61PA | 62.1 | 0.406 | 0.234 | 1.25% | 6 | 2 | 0.7433 | 500, 340, 231, 157, 108, 72.8, 50.0, 33.7 | 1.47 | NO | PC failed | | FAL.NHK.SLS-RB.19.08.04 |
| FAL.NHK.PA-NB.B2.25.08.04 | DF | AA61PA | 127 | 0.830 | 0.988 | 1.33% | 2 | 3 | 0.8882 | 500, 233, 108, 50.3, 23.4, 10.9, 5.1, 2.4 | 2.15 | YES | | | FAL.NHK.SLS.25.08.04 |
| FAL.NHK.PA.17.09.04 | DF | AA61PA | 54.3 | 0.355 | 0.705 | 2.54% | 2 | 1 | 0.8385 | 1000, 465, 216, 101, 46.8, 21.8, 10.1, 4.71 | 2.15 | YES | | outlier removed by SD; ppt in C1; interference with NRU in C1-C3 conc.; SD consider removing C1-C3 data from PRISM analyses? | FAL.NHK.SLS.17.09.04 |
| FAL.NHK.PA.B4.30.09.04 | DF | AA61PA | 53.3 | 0.348 | 0.753 | 2.27% | 3 | 2 | 0.9753 | 500, 233, 108, 50.3, 23.4, 10.9, 5.1, 2.4 | 2.15 | YES | | toxicity curve begins to rise at high concentrations; maybe affecting NRU; outlier removed by SD | FAL.NHK.SLS.30.09.03 |
| **AMITRIPTYLINE HCL** | | | | | | | | | | | | | | | |
| ***IIVS*** | | | | | | | | | | | | | | | |
| A1 | RF | AA61RF | 10.3 | 0.033 | 0.516 | 5.22% | 0 | 1 | 0.9945 | 1000, 100, 10, 1, 0.1, 0.01, 0.001, 0.0001 | 10 | RF | range finder; no points between 0 - 50% | | SLS-A1-N040317B |
| B1 | DF | AA61RF | 10.1 | 0.032 | 0.543 | 3.51% | 2 | 3 | 0.9878 | 100, 55.6, 30.9, 17.1, 9.53, 5.29, 2.94, 1.63 | 1.8 | YES | | | SLS-B1-N040423A |
| B2 | DF | AA61RF | 10.6 | 0.034 | 0.636 | 2.41% | 2 | 3 | 0.9899 | 100, 55.6, 30.9, 17.1, 9.53, 5.29, 2.94, 1.63 | 1.8 | YES | | | SLS-B2-N040424A |
| B3 | DF | AA61RF | 12.1 | 0.039 | 0.496 | 1.03% | 2 | 2 | 0.9713 | 100, 55.6, 30.9, 17.1, 9.53, 5.29, 2.94, 1.63 | 1.8 | YES | | | SLS-B3-N040506A |
| ***ECBC*** | | | | | | | | | | | | | | | |
| AA61PR-A1 | RF | AA61PR | 7.64 | 0.024 | 0.518 | 3.91% | 2 | 3 | 0.9625 | 1000, 100, 10, 1, 0.1, 0.01, 0.001, 0.0001 | 10 | RF | range finder | ppt in 2X C1 | SLS-P4 |
| AA61PR-B1 | DF | AA61PR | 12.4 | 0.040 | 0.647 | 4.74% | 2 | 3 | 0.9678 | 100, 46.5, 21.6, 10.1, 4.68, 2.18, 1.01, 0.47 | 2.15 | YES | | | SLS-P21 |
| AA61PR-B2 | DF | AA61PR | 13.0 | 0.042 | 0.921 | 1.85% | 3 | 3 | 0.9817 | 100, 46.5, 21.6, 10.1, 4.68, 2.18, 1.01, 0.47 | 2.15 | YES | | | SLS-P23 |
| AA61PR-B3 | DF | AA61PR | 6.94 | 0.022 | 0.648 | 2.47% | 3 | 4 | 0.9710 | 100, 46.5, 21.6, 10.1, 4.68, 2.18, 1.01, 0.47 | 2.15 | YES | | | SLS-P24 |
| ***FRAME*** | | | | | | | | | | | | | | | |

# NHK NRU Reference Substance Data

| Experiment ID NHK Cells | Assay Type[1] | Substance ID | $IC_{50}$ (ug/mL) | $IC_{50}$ (mM) | Mean VC OD[2] | Difference of right/left VC from mean VC[3] | Number of Points 0 - 50 %[4] | Number of Points 50 - 100 %[5] | $R^2$ [6] | Exposure Concentrations (ug/mL)[7] | Dilution Factor[8] | Acceptable Tests[9] | Rationale for Unacceptability | Notes | PC ID |
|---|---|---|---|---|---|---|---|---|---|---|---|---|---|---|---|
| FAL.NHK.LE.A1.13.02.03 | RF | AA61LE | 6.52 | 0.021 | 0.114 | 4.66% | 2 | 2 | 0.8453 | 1000, 100, 10, 1, 0.1, 0.01, 0.001, 0.0001 | 10 | RF | range finder | SD rejected due to bacterial contamination in some plates in test series; ppt in 2X C1 | FAL.NHK.SLS.13.02.03 |
| FAL.NHK.LE.A2.20.02.03 | DF | AA61LE | 3.08 | 0.010 | 0.213 | 0.12% | 3 | 3 | 0.9449 | 100, 46.5, 21.6, 10.1, 4.68, 2.18, 1.01, 0.47 | 2.15 | YES | | | FAL.NHK.SLS.20.02.03 |
| FAL.NHK.LE.B1.27.02.04new | DF | AA61LE | 13.6 | 0.043 | 0.548 | 1.40% | 3 | 4 | 0.9200 | 50, 34.0, 23.1, 15.7, 10.7, 7.28, 4.96, 3.37 | 1.47 | YES | | file corrected by SD | FAL.NHK.SLS.27.02.03 |
| FAL.NHK.LE.B3.19.03.04 | DF | AA61LE | 6.04 | 0.019 | 0.528 | 4.71% | 3 | 5 | 0.9296 | 50.0, 23.3, 10.8, 5.03, 2.34, 1.09, 0.51, 0.24 | 2.15 | YES | | | FAL.NHK.SLS.19.03.03 |

## ARSENIC III TRIOXIDE

| | | | | | | | | | | | | | | | |
|---|---|---|---|---|---|---|---|---|---|---|---|---|---|---|---|
| ***IIVS*** | | | | | | | | | | | | | | | |
| Preliminary | RF | AA61FX | 5.16 | 0.026 | 0.585 | 3.78% | 1 | 0 | 0.9828 | 100, 10, 1, 0.1, 0.01, 0.001, 0.0001, 0.00001 | 10 | RF | range finder | | Preliminary |
| B1 | DF | AA61FX | 26.4 | 0.133 | 0.487 | 0.24% | 2 | 2 | 0.9238 | 100, 46.4, 21.6, 10, 4.64, 2.16, 1.00, 0.46 | 2.15 | YES | | | SLS-B1 |
| B2 | DF | AA61FX | 22.5 | 0.114 | 0.633 | 7.02% | 2 | 1 | 0.9682 | 100, 46.4, 21.6, 10, 4.64, 2.16, 1.00, 0.46 | 2.15 | YES | | | SLS-B2 |
| B3 | DF | AA61FX | 22.5 | 0.114 | 0.817 | 7.11% | 2 | 0 | 0.9900 | 100, 46.4, 21.6, 10, 4.64, 2.16, 1.00, 0.46 | 2.15 | NO | No points between 50 & 90% | | SLS-B3 |
| B4 | DF | AA61FX | 13.9 | 0.070 | 0.826 | 6.84% | 1 | 1 | 0.9850 | 100, 46.4, 21.6, 10, 4.64, 2.16, 1.00, 0.46 | 2.15 | YES | | | SLS-B4 |
| ***ECBC*** | | | | | | | | | | | | | | | |
| ECBC-NHK-Ib-01 AA61KU-A1 | RF | AA61KU | 32.2 | 0.163 | 0.811 | 7.13% | 0 | 1 | -0.8980 | 25, 2.5, 0.25, 0.025, 0.0025,0.00025, 0.000025, 0.0000025 | 10 | RF | range finder | | SLS-P2 |
| ECBC-NHK-Ib-02 AA61KU-B1 | DF | AA61KU | 4.51 | 0.023 | 0.978 | 2.63% | 3 | 1 | 0.9577 | 50, 34, 23.1, 15.7, 10.7, 7.3, 5.0, 3.4 | 1.47 | YES | | | SLS-P3 |
| ECBC-NHK-Ib-03 AA61KU-B2 | DF | AA61KU | 7.76 | 0.039 | 1.200 | 2.58% | 3 | 1 | 0.9757 | 25, 17.0, 11.6, 7.87, 5.35, 3.64, 2.48, 1.69 | 1.47 | YES | | | SLS-P4 |
| ECBC-NHK-Ib-04 AA61KU-B3 | DF | AA61KU | 8.11 | 0.041 | 1.080 | 5.57% | 3 | 2 | 0.8912 | 25, 17.0, 11.6, 7.87, 5.35, 3.64, 2.48, 1.69 | 1.47 | YES | | | SLS-P5 |
| ECBC-NHK-Ib-05 AA61KU-B4 | DF | AA61KU | 10.7 | 0.054 | 1.086 | 3.26% | 2 | 1 | 0.9369 | 25, 17.0, 11.6, 7.87, 5.35, 3.64, 2.48, 1.69 | 1.47 | YES | | | SLS-P7 |
| ***FRAME*** | | | | | | | | | | | | | | | |
| A1 1b/NHKRF1/FAL/NC | RF | AA61NC | 1.49 | 0.008 | 0.160 | 0.52% | 1 | 1 | 0.6560 | 12.5, 2.5, 0.5, 0.1, 0.02, 0.004, 0.00080, 0.00016 | 5 | RF | range finder | | A1 1b/NHKCTR1/FAL/SLS |
| A2 1b/NHKRF2/FAL/NC | RF | AA61NC | 3.01 | 0.015 | 0.685 | 10.17% | 4 | 4 | 0.5164 | 12.5, 8.5, 5.78, 3.93, 2.67, 1.82, 1.23, 0.84 | 1.47 | NO | low r2 | | A2 1b/NHKCTR2/FAL/SLS |
| A3 1b/NHK/DF2/FAL/NC | DF | AA61NC | 0.00016 | 0.000 | 0.051 | 18.01% | 0 | 0 | -0.9880 | 10, 6.8, 4.6, 3.14, 2.13, 1.45, 0.98, 0.67 | 1.47 | NO | VC difference > 15%; no points between 10 & 90%; $R^2$ < 0.8; PC failed | NR crystal problems; used different medium; % viability values are negative; PRISM curve below 0 | A3 1b/NHK/CTR4/FAL/ |
| A4 1b/NHK/DF3/FAL/NC | DF | AA61NC | 0.502 | 0.003 | 0.144 | 1.97% | 5 | 0 | 0.7012 | 10, 6.8, 4.6, 3.14, 2.13, 1.45, 0.98, 0.67 | 1.47 | NO | No point between 50 & 90%; $R^2$ < 0.8 | NR crystal problems; used medium not normally used | A4 1b/NHK/CTR5/FAL |
| A5 1b/NHK/DF4/FAL/NC | DF | AA61NC | NA | NA | -0.003 | 83.48% | 0 | 0 | NC | 10, 6.8, 4.6, 3.14, 2.13, 1.45, 0.98, 0.67 | 1.47 | NO | VC difference > 15%; no points between 10& 90%; no $R^2$ or ICx; PC failed | NR crystal problems; used different medium; OD values of test wells no different than background ODs; negative values for VC | A5 1b/NHK/CTR6/FAL |
| A6 1b/NHK/DF5/FAL/NC | DF | AA61NC | 2.95 | 0.015 | 1.145 | 11.51% | 2 | 3 | 0.8929 | 10, 6.8, 4.6, 3.14, 2.13, 1.45, 0.98, 0.67 | 1.47 | YES | | | A6 1b/NHK/CTR7/FAL |
| A8 1b/NHK/DF7/FAL/NC | DF | AA61NC | 6.26 | 0.032 | 0.740 | 2.23% | 1 | 2 | 0.8855 | 15, 10.2, 6.93, 4.72, 3.21, 2.18, 1.48, 1.01 | 1.47 | YES | | | A8 1b/NHK/CTR9/FAL |

# NHK NRU Reference Substance Data

| Experiment ID NHK Cells | Assay Type[1] | Substance ID | $IC_{50}$ (ug/mL) | $IC_{50}$ (mM) | Mean VC OD[2] | Difference of right/left VC from mean VC[3] | Number of Points 0 - 50 %[4] | Number of Points 50 - 100 %[5] | $R^2$ [6] | Exposure Concentrations (ug/mL)[7] | Dilution Factor[8] | Acceptable Tests[9] | Rationale for Unacceptability | Notes | PC ID |
|---|---|---|---|---|---|---|---|---|---|---|---|---|---|---|---|
| A9 1b/NHK/DF8/FAL/NC | DF | AA61NC | 6.25 | 0.032 | 0.798 | 9.28% | 1 | 6 | 0.7381 | 15, 10.2, 6.93, 4.72, 3.21, 2.18, 1.48, 1.01 | 1.47 | NO | $R^2$ < 0.8; PC failed | | A9 1b/NHK/CTR10/FAL |
| A10 1b/NHK/DF9/FAL/NC | DF | AA61NC | 1.29 | 0.007 | 1.108 | 3.81% | 4 | 1 | 0.8550 | 15, 10.2, 6.93, 4.72, 3.21, 2.18, 1.48, 1.01 | 1.47 | YES | | no outliers | A10 1b/NHK/CTR11/FAL |
| A11 1b/NHK/DF10/FAL/SLS//NC | DF | AA61NC | 1.54 | 0.008 | 1.439 | 0.51% | 4 | 1 | 0.8443 | 15, 10.2, 6.93, 4.72, 3.21, 2.18, 1.48, 1.01 | 1.47 | YES | | removed outliers from VCs | A11 1b/NHK/CTR12/FAL |
| A12 1b/NHK/DF11/FAL/NC | DF | AA61NC | 1.88 | 0.010 | 0.459 | 1.00% | 5 | 2 | 0.8901 | 15, 10.2, 6.93, 4.72, 3.21, 2.18, 1.48, 1.01 | 1.47 | YES | | | A12 1b/NHK/CTR13/FAL/SLS |
| 1b/NHK/DF4/FAL/NC | DF | AA61NC | 1.36 | 0.007 | 0.755 | 1.17% | 4 | 1 | 0.8346 | 15, 10.2, 6.93, 4.72, 3.21, 2.18, 1.48, 1.01 | 1.47 | YES | | | 1b/NHK/CTR14/FAL/SLS |
| **ATROPINE SULFATE** | | | | | | | | | | | | | | | |
| ***IIVS*** | | | | | | | | | | | | | | | |
| A1 | RF | AA61NE | 91.6 | 0.132 | 0.544 | 0.93% | 2 | 1 | 0.9667 | 10000, 1000, 100, 10, 1, 0.1, 0.01, 0.001 | 10 | RF | range finder | | SLS-A4-N040331N |
| B1 | DF | AA61NE | 106 | 0.152 | 0.578 | 5.65% | 5 | 3 | 0.9599 | 1000, 556, 309, 171, 95.3, 52.9, 29.4, 16.3 | 1.8 | YES | | | SLS-B4-N040513C |
| B2 | DF | AA61NE | 64.6 | 0.093 | 0.492 | 0.17% | 5 | 3 | 0.9862 | 1000, 556, 309, 171, 95.3, 52.9, 29.4, 16.3 | 1.8 | YES | | | SLS-B5-N040514B |
| B3 | DF | AA61NE | 78.9 | 0.114 | 0.705 | 3.13% | 5 | 3 | 0.9915 | 1000, 556, 309, 171, 95.3, 52.9, 29.4, 16.3 | 1.8 | YES | | outlier removed by SD | SLS-B6-N040716A |
| ***ECBC*** | | | | | | | | | | | | | | | |
| AA61KX-A1 | RF | AA61KX | 57.5 | 0.083 | 0.549 | 2.70% | 3 | 2 | 0.9435 | 10000, 1000, 100, 10, 1, 0.1, 0.01, 0.001 | 10 | RF | range finder | | SLS-P16 |
| AA61KX-B1 | DF | AA61KX | 79.4 | 0.114 | 0.798 | 3.96% | 4 | 4 | 0.9761 | 800, 372, 173, 80.5, 37.4, 17.4, 8.1, 3.8 | 2.15 | YES | | | SLS-P30 |
| AA61KX-B2 | DF | AA61KX | 97.5 | 0.140 | 0.673 | 1.08% | 3 | 5 | 0.9491 | 800, 372, 173, 80.5, 37.4, 17.4, 8.1, 3.8 | 2.15 | YES | | | SLS-P40 |
| AA61KX-B3 | DF | AA61KX | 79.4 | 0.114 | 0.675 | 2.42% | 4 | 2 | 0.9655 | 800, 372, 173, 80.5, 37.4, 17.4, 8.1, 3.8 | 2.15 | YES | | | SLS-P42 |
| ***FRAME*** | | | | | | | | | | | | | | | |
| FAL.NHK.FU.A1.28.07.04 | RF | AA61FU | 33.3 | 0.048 | 0.059 | 10.09% | 3 | 3 | 0.7561 | 10000, 1000, 100, 10, 1, 0.1, 0.01, 0.001 | 10 | RF | range finder | | FAL.NHK.SLS.28.07.04 |
| FAL.NHK.FU.B1.11.08.04 | DF | AA61FU | 202 | 0.291 | 0.809 | 8.32% | 3 | 3 | 0.9333 | 10000, 4651, 2163, 1006, 468, 218, 101, 47 | 2.15 | YES | | | FAL.NHK.SLS.11.08.04 |
| FAL.NHK.FU-NB.B2.25.08.04 | DF | AA61FU | 80.7 | 0.116 | 1.010 | 3.32% | 6 | 2 | 0.9459 | 5000, 2326, 1082, 503, 234, 109, 50.6, 23.6 | 2.15 | YES | | | FAL.NHK.SLS.25.08.04 |
| FAL.NHK.FU.B3.27.08.04 | DF | AA61FU | 30.4 | 0.044 | 0.526 | 4.53% | 5 | 1 | 0.9696 | 5000, 2326, 1082, 503, 234, 109, 50.6, 23.6 | 2.15 | YES | | | FAL.NHK.SLS.27.08.04 |
| **BORIC ACID** | | | | | | | | | | | | | | | |
| ***IIVS*** | | | | | | | | | | | | | | | |
| A1 | RF | AA61LD | 724 | 11.717 | 0.536 | 2.15% | 1 | 1 | 0.9101 | 1000, 100, 10, 1, 0.1, 0.01, 0.001, 0.0001 | 10 | RF | range finder | | SLS-A4-N040331N |
| B1 | DF | AA61LD | 455 | 7.359 | 0.583 | 4.16% | 4 | 4 | 0.9594 | 2500, 1563, 977, 610, 381, 238, 149, 93 | 1.6 | YES | | ppt in 1X C1 | SLS-B8-N040819A |
| B2 | DF | AA61LD | 460 | 7.444 | 0.541 | 3.17% | 4 | 4 | 0.9778 | 2500, 1563, 977, 610, 381, 238, 149, 93 | 1.6 | YES | | ppt in 1X C1 | SLS-B9-N040820A |
| B3 | DF | AA61LD | 476 | 7.705 | 0.553 | 4.25% | 4 | 4 | 0.9713 | 2500, 1563, 977, 610, 381, 238, 149, 93 | 1.6 | YES | | | SLS-B10-N040903A |
| ***ECBC*** | | | | | | | | | | | | | | | |
| AA61JH-A1 | RF | AA61JH | 449 | 7.258 | 0.449 | 0.45% | 2 | 2 | 0.9280 | 10000, 1000, 100, 10, 1, 0.1, 0.01, 0.001 | 10 | RF | range finder | | SLS-P17 |
| AA61JH-B1 | DF | AA61JH | 598 | 9.678 | 0.690 | 6.95% | 4 | 4 | 0.9413 | 6000, 2791, 1298, 604, 281, 131, 60.7, 28.3 | 2.15 | YES | | | SLS-P32 |
| AA61JH-B2 | DF | AA61JH | 371 | 5.995 | 0.736 | 3.27% | 4 | 3 | 0.9757 | 6000, 2791, 1298, 604, 281, 131, 60.7, 28.3 | 2.15 | YES | | | SLS-P35 |
| AA61JH-B3 | DF | AA61JH | 350 | 5.660 | 0.438 | 3.54% | 4 | 4 | 0.9848 | 6000, 2791, 1298, 604, 281, 131, 60.7, 28.3 | 2.15 | YES | | | SLS-P37 |
| ***FRAME*** | | | | | | | | | | | | | | | |

# NHK NRU Reference Substance Data

| Experiment ID NHK Cells | Assay Type[1] | Substance ID | $IC_{50}$ (ug/mL) | $IC_{50}$ (mM) | Mean VC OD[2] | Difference of right/left VC from mean VC[3] | Number of Points 0 - 50 %[4] | Number of Points 50 - 100 %[5] | $R^2$ [6] | Exposure Concentrations (ug/mL)[7] | Dilution Factor[8] | Acceptable Tests[9] | Rationale for Unacceptability | Notes | PC ID |
|---|---|---|---|---|---|---|---|---|---|---|---|---|---|---|---|
| FAL.NHK.GR.A1.28.07.04 | RF | AA61GR | 1020 | 16.474 | 0.055 | 0.90% | 1 | 1 | 0.6145 | 10000, 1000, 100, 10, 1, 0.1, 0.01, 0.001 | 10 | RF | range finder | | FAL.NHK.SLS.28.07.04 |
| FAL.NHK.GR.B1.11.08.04 | DF | AA61GR | 592 | 9.568 | 0.739 | 0.12% | 4 | 4 | 0.9157 | 10000, 4651, 2163, 1006, 468, 218, 101, 47 | 2.15 | YES | | | FAL.NHK.SLS.11.08.04 |
| FAL.NHK.GR-NB.B2.25.08.04 | DF | AA61GR | 851 | 13.766 | 0.943 | 0.07% | 4 | 4 | 0.9741 | 10000, 4651, 2163, 1006, 468, 218, 101, 47 | 2.15 | YES | | | FAL.NHK.SLS.25.08.04 |
| FAL.NHK.GR.B3.27.08.04 | DF | AA61GR | 107 | 1.733 | 0.534 | 8.67% | 6 | 2 | 0.9607 | 10000, 4651, 2163, 1006, 468, 218, 101, 47 | 2.15 | YES | | | FAL.NHK.SLS.27.08.04 |
| **BUSULFAN** | | | | | | | | | | | | | | | |
| ***IIVS*** | | | | | | | | | | | | | | | |
| A1 | RF | AA61RL | 1150 | 4.683 | 0.500 | 10.83% | 0 | 3 | 0.5430 | 100, 10, 1, 0.1, 0.01, 0.001, 0.0001, 0.00001 | 10 | RF | range finder; no points between 0 - 50% | | SLS-A1-N040317B |
| B1 | DF | AA61RL | 274 | 1.113 | 0.732 | 7.46% | 2 | 4 | 0.9237 | 750, 417, 231, 129, 71.4, 39.7, 22.1, 12.3 | 1.8 | YES | | | SLS-B12-N041022B |
| B2 | DF | AA61RL | 317 | 1.287 | 0.598 | 3.83% | 2 | 5 | 0.9721 | 500, 333, 222, 148, 98.8, 65.8, 43.9, 29.3 | 1.5 | YES | | | SLS-B113-N041029B |
| B3 | DF | AA61RL | 348 | 1.414 | 0.792 | 2.36% | 2 | 6 | 0.9429 | 500, 333, 222, 148, 98.8, 65.8, 43.9, 29.3 | 1.5 | YES | | | SLS-B14-N041030A |
| ***ECBC*** | | | | | | | | | | | | | | | |
| AA61LH-A1 | RF | AA61LH | NA | NA | 0.624 | 3.53% | 0 | 7 | NA | 100, 10, 1, 0.1, 0.01, 0.001, 0.0001,0.00001 | 10 | RF | range finder | | SLS-P4 |
| AA61LH-B1 | DF | AA61LH | 217 | 0.882 | 1.103 | 1.81% | 1 | 7 | 0.6962 | 800, 372, 173, 80.5, 37.4, 17.4, 8.10, 3.77 | 2.15 | YES | | ppt in 2X C1 | SLS-P47 |
| AA61LH-B2 | DF | AA61LH | 211 | 0.856 | 0.792 | 1.88% | 2 | 6 | 0.8550 | 800, 372, 173, 80.5, 37.4, 17.4, 8.10, 3.77 | 2.15 | YES | | ppt in 2X C1 | SLS-P48 |
| AA61LH-B3 | DF | AA61LH | 332 | 1.347 | 1.344 | 2.99% | 1 | 7 | 0.6216 | 800, 372, 173, 80.5, 37.4, 17.4, 8.10, 3.77 | 2.15 | YES | | ppt in 2X C1 | SLS-P51 |
| ***FRAME*** | | | | | | | | | | | | | | | |
| FAL.NHK.JE.A1.13.02.03 | RF | AA61JE | 29.8 | 0.121 | 0.152 | 15.63% | 1 | 2 | 0.7100 | 250, 25, 2.5, 0.25, 0.025, 0.0025, 0.00025 | 10 | RF | range finder | SD rejected due to bacterial contamination in some of the plates in this test series | FAL.NHK.SLS.13.02.03 |
| FAL.NHK.JE.A2.20.02.03 | DF | AA61JE | 171 | 0.694 | 0.195 | 6.46% | 2 | 3 | 0.6939 | 250, 116.3, 54.1, 25.2, 11.7, 5.4, 2.5, 1.2 | 2.15 | YES | | DF since conc. series is different from A1 RF | FAL.NHK.SLS.20.02.03 |
| FAL.NHK.JE.B1.27.02.04 | DF | AA61JE | 142 | 0.575 | 0.622 | 3.35% | 2 | 6 | 0.8940 | 500, 233, 108, 50.3, 23.4, 10.9, 5.06, 2.35 | 2.15 | YES | | | FAL.NHK.SLS.27.02.03 |
| FAL.NHK.JE.B2.19.03.03 | DF | AA61JE | 490 | 1.988 | 0.573 | 1.40% | 1 | 6 | 0.8387 | 500, 233, 108, 50.3, 23.4, 10.9, 5.06, 2.35 | 2.15 | YES | | | FAL.NHK.SLS.19.03.03 |
| **CADMIUM II CHLORIDE** | | | | | | | | | | | | | | | |
| ***IIVS*** | | | | | | | | | | | | | | | |
| A2 | RF | AA61NK | 2.05 | 0.011 | 0.841 | 4.19 | 2 | 2 | 0.9692 | 100, 10, 1, 0.1, 0.01, 0.001, 0.0001, 0.00001 | 10 | RF | range finder | | SLS-A2 |
| B1 | DF | AA61NK | 1.84 | 0.010 | 0.444 | 6.37 | 5 | 3 | 0.9906 | 10, 6.7, 4.4, 3.0, 2.0, 1.3, 0.88, 0.59 | 1.47 | YES | | | SLS-B1 |
| B2 | DF | AA61NK | 1.72 | 0.009 | 0.344 | 6.83 | 3 | 3 | 0.9819 | 10, 6.7, 4.4, 3.0, 2.0, 1.3, 0.88, 0.59 | 1.47 | YES | | | SLS-B2 |
| B3 | DF | AA61NK | 2.02 | 0.011 | 0.338 | 4.78 | 2 | 2 | 0.9738 | 10, 6.7, 4.4, 3.0, 2.0, 1.3, 0.88, 0.59 | 1.47 | YES | | | SLS-B3 |
| ***ECBC*** | | | | | | | | | | | | | | | |
| AA61KR-A1 | RF | AA61KR | 1.75 | 0.010 | 0.492 | 0.22 | 3 | 3 | 0.9218 | 1000, 100, 10, 1.0, 0.1, 0.01, 0.001, 0.0001 | 10 | RF | range finder | | SLS-P4 |
| AA61KR-B1 | DF | AA61KR | 2.31 | 0.013 | 0.918 | 6.16 | 4 | 3 | 0.9738 | 100, 46.5, 21.6, 10.1, 4.7, 2.2, 1.0, 0.47 | 2.15 | YES | | | SLS-P8 |
| AA61KR-B3 | DF | AA61KR | 3.29 | 0.018 | 0.749 | 0.44 | 2 | 2 | 0.9446 | 8.00, 5.44, 3.70, 2.52, 1.71, 1.17, 0.793, 0.539 | 1.47 | YES | | | SLS-P12 |
| AA61KR-B5 | DF | AA61KR | 1.16 | 0.006 | 0.143 | 12.96 | 2 | 3 | 0.8299 | 8.00, 5.44, 3.70, 2.52, 1.71, 1.17, 0.793, 0.539 | 1.47 | YES | | | SLS-P15 |

# NHK NRU Reference Substance Data

| Experiment ID NHK Cells | Assay Type[1] | Substance ID | $IC_{50}$ (ug/mL) | $IC_{50}$ (mM) | Mean VC OD[2] | Difference of right/left VC from mean VC[3] | Number of Points 0 - 50 %[4] | Number of Points 50 - 100 %[5] | $R^2$ [6] | Exposure Concentrations (ug/mL)[7] | Dilution Factor[8] | Acceptable Tests[9] | Rationale for Unacceptability | Notes | PC ID |
|---|---|---|---|---|---|---|---|---|---|---|---|---|---|---|---|
| AA61KR-B6 | DF | AA61KR | 2.57 | 0.014 | 0.867 | 2.57 | 3 | 3 | 0.9730 | 8.00, 5.44, 3.70, 2.52, 1.71, 1.17, 0.793, 0.539 | 1.47 | YES | | | SLS-P16 |
| AA61KR-B7 | DF | AA61KR | 1.66 | 0.009 | 0.507 | 6.37 | 3 | 4 | 0.9495 | 8.00, 5.44, 3.70, 2.52, 1.71, 1.17, 0.793, 0.539 | 1.47 | YES | | | SLS-P18 |
| ***FRAME*** | | | | | | | | | | | | | | | |
| FAL.NHK.JP.A1.30.07.03 | RF | AA61JP | 1.71 | 0.009 | 1.263 | 6.60 | 3 | 5 | 0.9364 | 1000, 100, 10, 1, 0.1, 0.01, 0.001, 0.0001 | 10 | RF | range finder | | FAL.NHK.SLS.30.07.03 |
| FAL.NHK.JP.B1.07.08.03 | DF | AA61JP | 0.722 | 0.004 | 0.253 | 4.61 | 4 | 0 | 0.9034 | 12.0, 8.2, 5.6, 3.2, 2.6, 1.8, 1.2, 0.8 | 1.47 | NO | No points between 50 & 100% viability | | FAL.NHK.SLS.07.08.03 |
| FAL.NHK.JP.B2.13.08.03 | DF | AA61JP | NA | NA | 0.219 | 9.58 | 0 | 3 | NA | 3.0, 2.04, 1.39, 0.94, 0.64, 0.44, 0.3, 0.2 | 1.47 | NO | PC failed; no points between 0 - 50%; no r2; | SD rejects this assay; can't explain the variability of cell growth in the wells | FAL.NHK.SLS.13.08.03 |
| FAL.NHK.JP.B3.23.08.03 | DF | AA61JP | 2.19 | 0.012 | 0.384 | 4.86 | 2 | 6 | 0.9507 | 5.0, 3.401, 2.314, 1.574, 1.071, 0.728, 0.496, 0.337 | 1.47 | NO | PC failed | | FAL.NHK.SLS.230803 |
| FAL.NHK.JP.B4.28.08.03 | DF | AA61JP | 2.96 | 0.016 | 0.504 | 7.31 | 1 | 1 | 0.8321 | 5.0, 3.401, 2.314, 1.574, 1.071, 0.728, 0.496, 0.337 | 1.47 | YES | | | FAL.NHK.SLS.280803 |
| FAL.NHK.JP.B5.05.09.03 | DF | AA61JP | 0.553 | 0.003 | 0.180 | 4.62 | 3 | 2 | 0.8972 | 5.0, 3.401, 2.314, 1.574, 1.071, 0.728, 0.496, 0.337 | 1.47 | YES | | | FAL.NHK.SLS.050903 |
| FAL.NHK.JP.B6.01.10.03 | DF | AA61JP | 2.46 | 0.013 | 1.289 | 6.38 | 2 | 6 | 0.4951 | 5.0, 3.401, 2.314, 1.574, 1.071, 0.728, 0.496, 0.337 | 1.47 | NO | low r2 | | FAL.NHK.SLS.01.10.03 |
| FAL.NHK.JP.B6.15.10.03 (should be B7?) | DF | AA61JP | 2.12 | 0.012 | 0.482 | 1.44 | 2 | 4 | 0.9753 | 5.0, 3.401, 2.314, 1.574, 1.071, 0.728, 0.496, 0.337 | 1.47 | YES | | | FAL.NHK.SLS.15.10.03 |

## CAFFEINE

| | | | | | | | | | | | | | | | |
|---|---|---|---|---|---|---|---|---|---|---|---|---|---|---|---|
| ***IIVS*** | | | | | | | | | | | | | | | |
| A1 | RF | AA61JM | 390 | 2.008 | 0.440 | 7.52% | 2 | 3 | 0.9708 | 10000, 1000, 100, 10, 1, 0.1, 0.01, 0.001 | 10 | RF | range finder | | SLS-A1-N040317B |
| B1 | DF | AA61JM | 565 | 2.909 | 0.489 | 3.92% | 3 | 4 | 0.9805 | 10000, 4545, 2066, 939, 427, 194, 88.2, 40.1 | 2.2 | YES | | | SLS-B1-N040423A |
| B2 | DF | AA61JM | 578 | 2.977 | 0.554 | 4.28% | 4 | 4 | 0.9817 | 10000, 4545, 2066, 939, 427, 194, 88.2, 40.1 | 2.2 | YES | | two phase dose response curve | SLS-B2-N040424A |
| B3 | DF | AA61JM | 579 | 2.984 | 0.456 | 2.91% | 3 | 3 | 0.9762 | 10000, 4545, 2066, 939, 427, 194, 88.2, 40.1 | 2.2 | YES | | ppt in 1X C2 | SLS-B3-N040506A |
| ***ECBC*** | | | | | | | | | | | | | | | |
| AA61NU-A1 | RF | AA61NU | 221 | 1.137 | 0.469 | 5.83% | 2 | 3 | 0.9546 | 10000, 1000, 100, 10, 1, 0.1, 0.01, 0.001 | 10 | RF | range finder | | SLS-P3 |
| AA61NU-B1 | DF | AA61NU | 1070 | 5.492 | 1.065 | 6.83% | 1 | 7 | 0.9140 | 2000, 930, 433,201,93.6, 43.5, 20.2, 9.4 | 2.15 | YES | | | SLS-P7 |
| AA61NU-B2 | DF | AA61NU | 824 | 4.244 | 1.076 | 0.91% | 4 | 4 | 0.9433 | 10000, 4651, 2163, 1006, 468, 218, 101, 47.1 | 2.15 | YES | | | SLS-P9 |
| AA61NU-B3 | DF | AA61NU | 558 | 2.876 | 0.777 | 7.01% | 4 | 4 | 0.9590 | 10000, 4651, 2163, 1006, 468, 218, 101, 47.1 | 2.15 | YES | | | SLS-P11 |
| ***FRAME*** | | | | | | | | | | | | | | | |
| FAL.NHK.GW.A1.13.02.03 | RF | AA61GW | 340 | 1.753 | 0.189 | 12.28% | 2 | 2 | 0.8133 | 10000, 1000, 100, 10, 1, 0.1, 0.01, 0.001 | 10 | RF | range finder | | FAL.NHK.SLS.13.02.03 |
| FAL.NHK.GW.A2.13.02.03 | DF | AA61GW | 553 | 2.849 | 0.247 | 2.26% | 3 | 4 | 0.9267 | 10000, 3175, 1008, 320, 102, 32.2, 10.2, 3.25 | 3.15 | YES | | DF because conc. series is different from A1 RF | FAL.NHK.SLS.20.02.03 |
| FAL.NHK.GW.B1.27.02.04 | DF | AA61GW | 794 | 4.090 | 0.456 | 0.75% | 2 | 2 | 0.9523 | 10000, 3175, 1008, 320, 102, 32.2, 10.2, 3.25 | 3.15 | YES | | | FAL.NHK.SLS.27.02.03 |
| FAL.NHK.GW.B3.18.03.04 | DF | AA61GW | 427 | 2.197 | 0.522 | 9.68% | 3 | 5 | 0.9542 | 10000, 3175, 1008, 320, 102, 32.2, 10.2, 3.25 | 3.15 | YES | | | FAL.NHK.SLS.18.03.03 |

# NHK NRU Reference Substance Data

| Experiment ID NHK Cells | Assay Type[1] | Substance ID | $IC_{50}$ (ug/mL) | $IC_{50}$ (mM) | Mean VC OD[2] | Difference of right/left VC from mean VC[3] | Number of Points 0 - 50 %[4] | Number of Points 50 - 100 %[5] | $R^2$ [6] | Exposure Concentrations (ug/mL)[7] | Dilution Factor[8] | Acceptable Tests[9] | Rationale for Unacceptability | Notes | PC ID |
|---|---|---|---|---|---|---|---|---|---|---|---|---|---|---|---|
| **CARBAMAZEPINE** | | | | | | | | | | | | | | | |
| ***IIVS*** | | | | | | | | | | | | | | | |
| A1 | RF | AA61NB | NA | NA | 0.575 | 4.51% | 0 | 1 | NA | 10, 1, 0.1, 0.01, 0.001, 0.0001, 0.00001, 0.000001 | 10 | RF | range finder; no points between 0 - 50% | | SLS-A5-N040401A |
| B1 | DF | AA61NB | 67.3 | 0.285 | 0.698 | 0.74% | 1 | 7 | 0.9759 | 75.0, 46.9, 29.3, 18.3, 11.4, 7.15, 4.47, 2.79 | 1.6 | YES | | | SLS-B12-N041022B |
| B2 | DF | AA61NB | 88.3 | 0.374 | 0.609 | 1.12% | 0 | 5 | 0.8732 | 75.0, 46.9, 29.3, 18.3, 11.4, 7.15, 4.47, 2.79 | 1.6 | NO | no points between 0 - 50% | | SLS-B113-N041029B |
| B3 | DF | AA61NB | 57.8 | 0.245 | 0.726 | 1.01% | 1 | 5 | 0.9378 | 75.0, 46.9, 29.3, 18.3, 11.4, 7.15, 4.47, 2.79 | 1.6 | YES | | | SLS-B14-N041030A |
| B4 | DF | AA61NB | 66.5 | 0.282 | 0.691 | 8.74% | 3 | 5 | 0.9237 | 200, 125, 78.1, 48.8, 30.5, 19.1, 11.9, 7.45 | 1.6 | YES | | | SLS-B15-N041110A |
| ***ECBC*** | | | | | | | | | | | | | | | |
| AA61LX-A1 | RF | AA61LX | 40.7 | 0.17240 | 0.827 | 3.59% | 1 | 4 | 0.9327 | 200, 20, 2, 0.2, 0.02, 0.002, 0.0002, 0.00002 | 10 | RF | range finder | | SLS-P19 |
| AA61LX-B1 | DF | AA61LX | 56.5 | 0.239 | 0.669 | 1.51% | 3 | 4 | 0.9784 | 400, 186, 86.5, 40.2, 18.7, 8.71, 4.05, 1.88 | 2.15 | YES | | ppt in 1X C1 | SLS-P41 |
| AA61LX-B2 | DF | AA61LX | 71.9 | 0.304 | 0.693 | 3.27% | 3 | 3 | 0.9477 | 400, 186, 86.5, 40.2, 18.7, 8.71, 4.05, 1.88 | 2.15 | YES | | ppt in 2X C1 and 1X C1 | SLS-P43 |
| AA61LX-B3 | DF | AA61LX | 70.0 | 0.296 | 1.100 | 2.84% | 2 | 5 | 0.9566 | 400, 186, 86.5, 40.2, 18.7, 8.71, 4.05, 1.88 | 2.15 | YES | | ppt in 2X C1 and 1X C1 | SLS-P45 |
| ***FRAME*** | | | | | | | | | | | | | | | |
| FAL.NHK.HD.A1.24.09.04 | RF | AA61HD | 594 | 2.515 | 0.292 | 5.56% | 1 | 2 | -0.5440 | 1000, 100, 10, 1.0, 0.1, 0.01, 0.001, 0.0001 | 10 | RF | range finder | | FAL.NHK.SLS.24.09.03 |
| FAL.NHK.HD.B1.01.10.04 | DF | AA61HD | 187 | 0.78983 | 1.037 | 6.43% | 2 | 5 | 0.9721 | 1000, 465, 216, 101, 46.8, 21.8, 10.1, 4.71 | 2.15 | NO | PC failed | | FAL.NHK.SLS.01.10.04 |
| FAL.NHK.HD.B2.07.10.04 | DF | AA61HD | 58.2 | 0.24634 | 0.631 | 2.15% | 4 | 4 | 0.9855 | 1000, 465, 216, 101, 46.8, 21.8, 10.1, 4.71 | 2.15 | YES | | ppt In 1X C1-C2 | FAL.NHK.SLS.07.10.03 |
| FAL.NHK.HD.B3.05.11.04 | DF | AA61HD | 71.3 | 0.30167 | 0.521 | 2.51% | 4 | 4 | 0.9236 | 1000, 465, 216, 101, 46.8, 21.8, 10.1, 4.71 | 2.15 | YES | | ppt In 1X C1-C2 | FAL.NHK.SLS.05.11.04 |
| FAL.NHK.HD.B4.10.11.04 | DF | AA61HD | 628 | 2.65789 | 1.114 | 4.71% | 3 | 5 | 0.9316 | 1000, 8870, 756, 658, 572, 497, 432, 376 | 1.15 | YES | | ppt In 1X C1-C2; ppt in 2X C1-C2 | FAL.NHK.SLS.10.11.04 |
| **CARBON TETRACHLORIDE** | | | | | | | | | | | | | | | |
| ***IIVS*** | | | | | | | | | | | | | | | |
| A1 | RF | AA61JK | NA | NA | 0.627 | 0.48% | 0 | 0 | NA | 1000, 100, 10, 1, 0.1, 0.01, 0.001, 0.0001 | 10 | RF | range finder; no points between 0 - 100% | | SLS-A2-N040320B |
| B1 | DF | AA61JK | 1540 | 10.023 | 0.679 | 3.90% | 0 | 2 | 0.7803 | 2500, 1389, 772, 429, 238, 132, 73.5, 40.8 | 1.8 | NO | no points between 0 - 50% | SD removed highest dose from Hill analyses due to ppt and upswing in response curve; ppt in 2X C1-C8 | SLS-B12-N041022B |
| B2 | DF | AA61JK | NA | NA | 0.634 | 6.32% | 0 | 2 | NA | 2500, 1389, 772, 429, 238, 132, 73.5, 40.8 | 1.8 | NO | no points between 0 - 50% | ppt in 2X C1-C4 | SLS-B113-N041029B |
| B3 | DF | AA61JK | NA | NA | 0.755 | 0.42% | 0 | 1 | NA | 2500, 1389, 772, 429, 238, 132, 73.5, 40.8 | 1.8 | NO | no points between 0 - 50% | ppt in 2X C1-C4 | SLS-B14-N041030A |
| ***ECBC*** | | | | | | | | | | | | | | | |
| AA61NZ-A1 | RF | AA61NZ | NA | NA | 0.844 | 3.30% | 0 | 3 | NA | 3000, 300, 30, 3, 0.3, 0.03, 0.003, 0.0003 | 10 | RF | range finder; no points between 0 - 50% | | SLS-P13 |
| AA61NZ-B1 | DF | AA61NZ | NA | NA | 0.642 | 0.54% | 0 | 4 | NA | 4500, 3719, 3074, 2540, 2099, 1735, 1434, 1185 | 1.21 | NO | no points between 0 - 50% | ppt in 2X C1- C5 | SLS-P52 |
| AA61NZ-B2 | DF | AA61NZ | NA | NA | 0.770 | 0.36% | NA | N/A | NA | 7000, 5785, 4781, 3951, 3266, 2699, 2230, 1843 | 1.21 | NO | SD rejects | ppt in 2X C1-C5; chemical globules in 1X C1-C4; plate columns C6 and C7 show no cells were plated | SLS-P56 |
| AA61NZ-B3 | DF | AA61NZ | NA | NA | 0.668 | 1.36% | 6 | 1 | NA | 7000, 5785, 4781, 3951, 3266, 2699, 2230, 1843 | 1.21 | NO | can't properly determine points between 0 - 100% | "roller coaster" toxicity curve; ppt in 2X C1-C8; outliers removed by SD | SLS-P59 |
| ***FRAME*** | | | | | | | | | | | | | | | |

# NHK NRU Reference Substance Data

| Experiment ID NHK Cells | Assay Type[1] | Substance ID | $IC_{50}$ (ug/mL) | $IC_{50}$ (mM) | Mean VC OD[2] | Difference of right/left VC from mean VC[3] | Number of Points 0 - 50 %[4] | Number of Points 50 - 100 %[5] | $R^2$ [6] | Exposure Concentrations (ug/mL)[7] | Dilution Factor[8] | Acceptable Tests[9] | Rationale for Unacceptability | Notes | PC ID |
|---|---|---|---|---|---|---|---|---|---|---|---|---|---|---|---|
| FAL.NHK.HC.A1.25.04.04 | RF | AA61HC | NA | NA | 0.920 | 2.74% | 0 | 0 | NA | 1000, 100, 10, 1, 0.1, 0.01, 0.001, 0.0001 | 10 | RF | range finder ; no points between 0 - 100% | | FAL.NHK.SLS.25.04.04 |
| FAL.NHK.HC.B1.11.06.04 | DF | AA61HC | NA | NA | 1.044 | 2.28% | 0 | 8 | NA | 2500, 1163, 541, 252, 117, 54.4, 25.3, 11.8 | 2.15 | NO | PC failed; no points between 0 - 50% | | FAL.NHK.SLS.11.06.04 |
| FAL.NHK.HC.B2.25.06.04 | DF | AA61HC | 1380 | 8.953 | 1.023 | 7.07% | 0 | 2 | 0.8467 | 2500, 1163, 541, 252, 117, 54.4, 25.3, 11.8 | 2.15 | NO | no points between 0 - 50% | | FAL.NHK.SLS.25.06.04 |
| FAL.NHK.HC.B3.19.08.04 nb | DF | AA61HC | NA | NA | 0.419 | 8.26% | 0 | 7 | 0.0000 | 2500, 2066, 1708, 1411, 1166, 964, 797, 658 | 1.21 | NO | curve unacceptable; no points between 0 - 50% would be acceptable due to | no toxicity detectedd | FAL.NHK.SLS-NB.19.08.04 |
| FAL.NHK.HC.B4.20.08.04 | DF | AA61HC | NA | NA | 0.739 | 2.93% | 0 | 1 | 0.0000 | 2500, 2066, 1708, 1411, 1166, 964, 797, 658 | 1.21 | NO | curve unacceptable; no points between 0 - 50% would be acceptable due to 1.21 dilution | no toxicity detected; outliers removed by SD | FAL.NHK.SLS.20.08.04 |

## CHLORAL HYDRATE

| | | | | | | | | | | | | | | | |
|---|---|---|---|---|---|---|---|---|---|---|---|---|---|---|---|
| ***IIVS*** | | | | | | | | | | | | | | | |
| A1 | RF | AA61FJ | 104 | 0.626 | 0.650 | 59.25% | 2 | 1 | 0.9885 | 10000, 1000, 100, 10, 1, 0.1, 0.01, 0.001 | 10 | RF | range finder; %VC difference >0 | volatility problem; VC1 OD values much lower than VC2; VC1 removed from subsequent analysis by SD | SLS-A2-N040320B |
| B1 | DF | AA61FJ | 114 | 0.686 | 0.601 | 3.48% | 5 | 3 | 0.9882 | 5000, 2273, 1033, 470, 213, 97.0, 44.1, 20.0 | 2.2 | YES | | | SLS-B1-N040423A |
| B2 | DF | AA61FJ | 111 | 0.674 | 0.513 | 0.29% | 5 | 3 | 0.9904 | 5000, 2273, 1033, 470, 213, 97.0, 44.1, 20.0 | 2.2 | YES | | used plate sealer | SLS-B2-N040424A |
| B3 | DF | AA61FJ | 111 | 0.672 | 0.517 | 6.49% | 3 | 3 | 0.9917 | 5000, 2273, 1033, 470, 213, 97.0, 44.1, 20.0 | 2.2 | YES | | | SLS-B3-N040506A |
| ***ECBC*** | | | | | | | | | | | | | | | |
| AA61KB-A1 | RF | AA61KB | NA | NA | 0.268 | 59.01% | 1 | 0 | NA | 10000, 1000, 100, 10, 1, 0.1, 0.01, 0.001 | 10 | RF | range finder | probable volatility problem | SLS-P6 |
| AA61KB-B1 | DF | AA61KB | 170 | 1.027 | 0.553 | 2.62% | 3 | 5 | 0.9314 | 500, 340, 231, 157, 107, 72.8, 49.6, 33.7 | 1.47 | YES | | | SLS-P20 |
| AA61KB-B2 | DF | AA61KB | 148 | 0.892 | 0.825 | 2.87% | 4 | 4 | 0.9619 | 500, 340, 231, 157, 107, 72.8, 49.6, 33.7 | 1.47 | YES | | | SLS-P22 |
| AA61KB-B3 | DF | AA61KB | 103 | 0.62153 | 0.394 | 3.13% | 4 | 4 | 0.9671 | 500, 340, 231, 157, 107, 72.8, 49.6, 33.7 | 1.47 | YES | | | SLS-P24 |
| ***FRAME*** | | | | | | | | | | | | | | | |
| FAL.NHK.LK.A1.25.03.04 | RF | AA61LK | 103 | 0.620 | 0.412 | 65.79% | 2 | 1 | 0.3337 | 10000, 1000, 100, 10, 1, 0.1, 0.01, 0.001 | 10 | RF | range finder; %VC difference > 15 | possible volatility problem | FAL.NHK.SLS.25.03.03 |
| FAL.NHK.LK.B1.25.04.04 | DF | AA61LK | NA | NA | 0.039 | 12.80% | 2 | 1 | NA | 1000, 465, 216, 101, 46.8, 21.8, 10.1, 4.71 | 2.15 | NO | wrong desorb solution used in NRU; SD rejects this test | | FAL.NHK.SLS.25.04.04 |
| FAL.NHK.LK.B2.28.04.04 | DF | AA61LK | 142 | 0.860 | 0.825 | 0.16% | 3 | 5 | 0.9864 | 1000, 465, 216, 101, 46.8, 21.8, 10.1, 4.7, | 2.15 | YES | | | FAL.NHK.SLS.28.04.03 |
| FAL.NHK.LK.B2.11.06.04 (should be B3) | DF | AA61LK | 135 | 0.816 | 0.797 | 3.73% | 3 | 3 | 0.9586 | 1000, 465, 216, 101, 46.8, 21.8, 10.1, 4.7, | 2.15 | NO | PC failed | | FAL.NHK.SLS.11.06.04 |
| FAL.NHK.LK.B4.23.06.04 | DF | AA61LK | 215 | 1.299 | 0.970 | 1.58% | 3 | 3 | 0.9863 | 1000, 465, 216, 101, 46.8, 21.8, 10.1, 4.71 | 2.15 | YES | | | FAL.NHK.SLS.23.06.04 |
| FAL.NHK.LK.B5.25.06.04 | DF | AA61LK | 119 | 0.722 | 0.927 | 2.14% | 3 | 3 | 0.9801 | 1000, 465, 216, 101, 46.8, 21.8, 10.1, 4.7, | 2.15 | YES | | | FAL.NHK.SLS.25.06.04 |

## CHLORAMPHENICOL

| | | | | | | | | | | | | | | | |
|---|---|---|---|---|---|---|---|---|---|---|---|---|---|---|---|
| ***IIVS*** | | | | | | | | | | | | | | | |
| A2 | RF | AA61GJ | 355 | 1.099 | 0.801 | 5.41% | 0 | 2 | 0.6374 | 100, 10, 1, 0.1, 0.01, 0.001, 0.0001, 0.00001 | 10 | RF | range finder | | SLS-A2 |
| B1 | DF | AA61GJ | 296 | 0.916 | 0.487 | 7.17% | 2 | 6 | 0.9691 | 560, 311, 173, 96, 53.3, 29.6, 16.5, 9.15 | 1.80 | YES | | | SLS-B1 |

# NHK NRU Reference Substance Data

| Experiment ID NHK Cells | Assay Type[1] | Substance ID | $IC_{50}$ (ug/mL) | $IC_{50}$ (mM) | Mean VC OD[2] | Difference of right/left VC from mean VC[3] | Number of Points 0 - 50 %[4] | Number of Points 50 - 100 %[5] | $R^2$ [6] | Exposure Concentrations (ug/mL)[7] | Dilution Factor[8] | Acceptable Tests[9] | Rationale for Unacceptability | Notes | PC ID |
|---|---|---|---|---|---|---|---|---|---|---|---|---|---|---|---|
| B2 | DF | AA61GJ | 351 | 1.086 | 0.358 | 5.44% | 1 | 6 | 0.9165 | 560, 311, 173, 96, 53.3, 29.6, 16.5, 9.15 | 1.80 | YES | | | SLS-B2 |
| B3 | DF | AA61GJ | 453 | 1.402 | 0.377 | 0.99% | 1 | 5 | 0.93 | 560, 311, 173, 96, 53.3, 29.6, 16.5, 9.15 | 1.80 | YES | | | SLS-B3 |
| ***ECBC*** | | | | | | | | | | | | | | | |
| AA61JS-A1 | RF | AA61JS | 239 | 0.740 | 0.706 | 3.80% | 1 | 7 | 0.8464 | 1000, 100, 10, 1.0, 0.1, 0.01, 0.001, 0.0001 | 10 | RF | range finder | | SLS-P4 |
| AA61JS-B1 | DF | AA61JS | 252 | 0.780 | 1.175 | 3.03% | 2 | 5 | 0.9626 | 2000, 930.2, 432.7, 201.2, 93.6, 43.5, 20.2, 9.4 | 2.15 | YES | | | SLS-P8 |
| AA61JS-B2 | DF | AA61JS | 222 | 0.687 | 0.975 | 0.22% | 3 | 5 | 0.9452 | 2000, 930.2, 432.7, 201.2, 93.6, 43.5, 20.2, 9.4 | 2.15 | YES | | | SLS-P10 |
| AA61JS-B3 | DF | AA61JS | 481 | 1.488 | 0.767 | 0.14% | 2 | 6 | 0.9349 | 2000, 930.2, 432.7, 201.2, 93.6, 43.5, 20.2, 9.4 | 2.15 | YES | | | SLS-P12 |
| ***FRAME*** | | | | | | | | | | | | | | | |
| FAL.NHK.MU.A1.30.07.03 | RF | AA61MU | 232 | 0.718 | 1.246 | 1.87% | 1 | 6 | 0.8736 | 1000, 100, 10, 1, 0.1, 0.01, 0.001, 0.0001 | 10 | RF | range finder | | FAL.NHK.SLS.30.07.03 |
| FAL.NHK.MU.B1.07.08.03 | DF | AA61MU | 160 | 0.495 | 0.187 | 55.29% | 5 | 2 | 0.0978 | 2500, 1162, 541, 251, 171, 79.6, 54.1, 25.2 | 2.15 | NO | VC difference > 15%; low r2 | | FAL.NHK.SLS.07.08.03 |
| FAL.NHK.MU.B2.15.08.03 | DF | AA61MU | 873 | 2.702 | 0.394 | 6.64% | 1 | 2 | 0.6646 | 2500, 1163, 541, 252, 117, 54, 25, 12 | 2.15 | NO | low r2 | | FAL.NHK.SLS.15.08.03 |
| FAL.NHK.MU.B3.23.08.03 | DF | AA61MU | 587 | 1.816 | 0.329 | 2.15% | 2 | 3 | 0.8892 | 2500, 1162, 541, 251, 171, 79.6, 54.1, 25.2 | 2.15 | NO | PC failed | | FAL.NHK.SLS.230803 |
| FAL.NHK.MU.B4.28.08.03 | DF | AA61MU | 476 | 1.473 | 0.472 | 15.82% | 1 | 5 | 0.8489 | 2500, 1162, 541, 251, 171, 79.6, 54.1, 25.2 | 2.15 | NO | % VC difference >15 | | FAL.NHK.SLS.280803 |
| FAL.NHK.MU.B5.05.09.03 | DF | AA61MU | 473 | 1.464 | 0.171 | 10.94% | 2 | 4 | 0.8686 | 2500, 1162, 541, 251, 171, 79.6, 54.1, 25.2 | 2.15 | YES | | | FAL.NHK.SLS.050903 |
| FAL.NHK.MU.B6.01.10.03 | DF | AA61MU | 173 | 0.535 | 1.304 | 7.20% | 2 | 6 | 0.5745 | 2500, 1162, 541, 251, 171, 79.6, 54.1, 25.2 | 2.15 | NO | low r2 | | FAL.NHK.SLS.01.10.03 |
| FAL.NHK.MU.B6.15.10.03 (should be B7?) | DF | AA61MU | 625 | 1.934 | 0.485 | 0.38% | 2 | 5 | 0.9212 | 2500, 1162, 541, 251, 171, 79.6, 54.1, 25.2 | 2.15 | YES | | | FAL.NHK.SLS.15.10.03 |
| FAL.NHK.MU.B7.19.10.03 | DF | AA61MU | 916 | 2.835 | 0.164 | 2.34% | 1 | 2 | 0.7152 | 2500, 1162, 541, 251, 171, 79.6, 54.1, 25.2 | 2.15 | NO | low r2 | | FAL.NHK.SLS.19.10.03 |
| FAL.NHK.MU.B8.23.10.03 | DF | AA61MU | 362 | 1.120 | 0.249 | 8.70% | 2 | 5 | 0.8807 | 2500, 1162, 541, 251, 171, 79.6, 54.1, 25.2 | 2.15 | YES | | | FAL.NHK.SLS.23.10.03 |
| FAL.NHK.MU.B9.24.10.03 | DF | AA61MU | 194 | 0.600 | 0.861 | 4.38% | 3 | 4 | 0.8814 | 2500, 1162, 541, 251, 171, 79.6, 54.1, 25.2 | 2.15 | YES | | | FAL.NHK.SLS.24.10.03 |

## CITRIC ACID

| | | | | | | | | | | | | | | | |
|---|---|---|---|---|---|---|---|---|---|---|---|---|---|---|---|
| ***IIVS*** | | | | | | | | | | | | | | | |
| A1 | RF | AA61MH | 298 | 1.551 | 0.413 | 4.09% | 2 | 1 | 0.9217 | 10000, 1000, 100, 10, 1, 0.1, 0.01, 0.001 | 10 | RF | range finder | | SLS-A1-N040317B |
| B1 | DF | AA61MH | 447 | 2.325 | 0.547 | 4.83% | 4 | 4 | 0.9681 | 10000, 4545, 2066, 939, 427, 194, 88.2, 40.1 | 2.2 | YES | | | SLS-B1-N040423A |
| B2 | DF | AA61MH | 407 | 2.121 | 0.562 | 0.18% | 2 | 4 | 0.9655 | 10000, 4545, 2066, 939, 427, 194, 88.2, 40.1 | 2.2 | YES | | | SLS-B2-N040424A |
| B3 | DF | AA61MH | 444 | 2.309 | 0.477 | 2.95% | 2 | 5 | 0.9609 | 3000, 1667, 926, 514, 286, 159, 88.2, 49.0 | 1.8 | YES | | ppt in 1X C1-C2 | SLS-B3-N040506A |
| ***ECBC*** | | | | | | | | | | | | | | | |
| AA61HH-A1 | RF | AA61HH | 295 | 1.54 | 0.511 | 3.95% | 2 | 1 | 0.9327 | 10000, 1000, 100, 10, 1, 0.1, 0.01, 0.001 | 10 | RF | range finder | | SLS-P1 |
| AA61HH-B1 | DF | AA61HH | 557 | 2.900 | 1.160 | 3.05% | 2 | 6 | 0.9595 | 1000, 680, 463, 315, 214, 146, 99.1, 67.4 | 1.47 | YES | | | SLS-P7 |
| AA61HH-B2 | DF | AA61HH | 589 | 3.065 | 1.191 | 1.62% | 2 | 6 | 0.9588 | 1000, 680, 463, 315, 214, 146, 99.1, 67.4 | 1.47 | YES | | | SLS-P9 |
| AA61HH-B3 | DF | AA61HH | 433 | 2.252 | 0.740 | 2.11% | 2 | 6 | 0.9690 | 1000, 680, 463, 315, 214, 146, 99.1, 67.4 | 1.47 | YES | | | SLS-P11 |
| ***FRAME*** | | | | | | | | | | | | | | | |
| FA.NH.HV.A1.11.02.04 (should be RB) | RF | AA61RB | 406 | 2.111 | 1.459 | 3.77% | 2 | 6 | 0.9700 | 10000, 1000, 100, 10, 1, 0.1, 0.01, 0.001 | 10 | RF | range finder | pH and color of 2X matches citric acid for 3T3 | FAL.NHK.SLS.11.02.04 |

# NHK NRU Reference Substance Data

| Experiment ID NHK Cells | Assay Type[1] | Substance ID | $IC_{50}$ (ug/mL) | $IC_{50}$ (mM) | Mean VC OD[2] | Difference of right/left VC from mean VC[3] | Number of Points 0 - 50 %[4] | Number of Points 50 - 100 %[5] | $R^2$ [6] | Exposure Concentrations (ug/mL)[7] | Dilution Factor[8] | Acceptable Tests[9] | Rationale for Unacceptability | Notes | PC ID |
|---|---|---|---|---|---|---|---|---|---|---|---|---|---|---|---|
| FAL.NHK.RB.A2.18.02.04 | DF | AA61RB | 362 | 1.886 | 0.210 | 4.13% | 6 | 0 | 0.7857 | 10000, 4651, 2163, 1006, 468, 218, 101, 47 | 2.15 | NO | PC failed; no points between 50-100% | this is a definitive test since conc. series is different from A1 range finder | FAL.NHK.SLS.18.02.04 |
| FAL.NHK.RB.B1.26.02.04 | DF | AA61RB | 348 | 1.809 | 0.183 | 5.10% | 3 | 5 | 0.9225 | 10000, 4651, 2163, 1006, 468, 218, 101, 47 | 2.15 | YES | | | FAL.NHK.SLS/MO.26.02.03 |
| FAL.NHK.RB.B2.27.02.04 | DF | AA61RB | 361 | 1.881 | 0.415 | 5.54% | 4 | 3 | 0.9577 | 10000, 4651, 2163, 1006, 468, 218, 101, 47 | 2.15 | YES | | ppt detected in C1-C3 at end of test | FAL.NHK.SLS.27.02.04 |
| FAL.NHK.RB.B3.18.03.04 | DF | AA61RB | 288 | 1.501 | 0.361 | 12.24% | 4 | 3 | 0.9324 | 5000, 2326, 1082, 503, 234, 109, 50.6, 23.5 | 2.15 | YES | | | FAL.NHK.SLS.18.03.03 |
| FAL.NHK.RB.B4.19.03.04 | DF | AA61RB | 251 | 1.308 | 0.510 | 2.65% | 4 | 4 | 0.9369 | 5000, 2326, 1082, 503, 234, 109, 50.6, 23.5 | 2.15 | YES | | | FAL.NHK.SLS.19.03.03 |

## COLCHICINE

| | | | | | | | | | | | | | | | |
|---|---|---|---|---|---|---|---|---|---|---|---|---|---|---|---|
| ***IIVS*** | | | | | | | | | | | | | | | |
| A2 | RF | AA61FL | 3.94 | 0.010 | 0.705 | 0.78% | 4 | 3 | 0.4952 | 10000, 1000, 100, 10, 1, 0.1, 0.01, 0.001 | 10 | RF | range finder | | SLS-A2 |
| B1 | DF | AA61FL | 0.00184 | 0.0000046 | 0.384 | 4.49% | 8 | 0 | 0.6346 | 1.0, 0.56, 0.31, 0.17, 0.095, 0.053, 0.029, 0.016 | 1.8 | NO | No points 50-100%; low R2 | | SLS-B1 |
| B2 | DF | AA61FL | 0.000675 | 0.0000017 | 0.289 | 9.86% | 8 | 0 | 0.5984 | 1.0, 0.56, 0.31, 0.17, 0.095, 0.053, 0.029, 0.016 | 1.8 | NO | No points 50-100%; low R2 | | SLS-B2 |
| B3 | DF | AA61FL | 0.0000306 | 0.0000001 | 0.335 | 7.90% | 8 | 0 | 0.3037 | 1.0, 0.56, 0.31, 0.17, 0.095, 0.053, 0.029, 0.016 | 1.8 | NO | No points 50-100%; low R2 | | SLS-B3 |
| B4 | DF | AA61FL | 0.0215 | 0.0000538 | 0.2 | 4.67% | 5 | 0 | 0.7647 | 1.0, 0.313, 0.098, 0.031, 0.0095, 0.0030, 0.00093, 0.00029 | 3.19 | NO | No points 50-100%; low R2 | | SLS-B4 |
| B7 | DF | AA61FL | 0.000733 | 0.0000018 | 0.624 | 0.50% | 6 | 2 | 0.06259 | 0.03, 0.02, 0.013, 0.0089, 0.0059, 0.0040, 0.0026, 0.0018 | 1.5 | NO | Low R2 | | SLS-B7 |
| B8* Hill function w/unconstrained bottom | DF | AA61FL | 0.00507 | 0.0000127 | 0.677 | 4.22% | 1 | 5 | 0.4741 | 0.1, 0.056, 0.031, 0.017, 0.0095, 0.0053, 0.0029,0.0016 | 1.8 | NO | PC failed | slow NHK growth; media problems | SLS-B8 |
| B9* Hill function w/unconstrained bottom | DF | AA61FL | 0.00506 | 0.0000127 | 0.598 | 3.21% | 0 | 6 | 0.5162 | 0.1, 0.056, 0.031, 0.017, 0.0095, 0.0053, 0.0029,0.0016 | 1.8 | NO | PC failed; no points between 0 - 50% | slow NHK growth; media problems | SLS-B9 |
| B10* Hill function w/unconstrained bottom | DF | AA61FL | NA | NA | 0.44 | 22.49% | 0 | 7 | 0.6108 | 0.1, 0.056, 0.031, 0.017, 0.0095, 0.0053, 0.0029,0.0016 | 1.8 | NO | PC failed; no points between 0 - 50%; low r2; %VC difference > 15 | slow NHK growth; media problems | SLS-B10 |
| B11* Hill function w/unconstrained bottom | DF | AA61FL | 0.00609 | 0.0000152 | 0.436 | 4.74% | 5 | 1 | 0.8455 | 0.1, 0.056, 0.031, 0.017, 0.0095, 0.0053, 0.0029,0.0016 | 1.8 | NO | PC failed | slow NHK growth; media problems | SLS-B11 |
| B12* Hill function w/unconstrained bottom | DF | AA61FL | 0.00927 | 0.0000232 | 0.727 | 5.52% | 3 | 3 | 0.7899 | 0.045, 0.030, 0.020, 0.0133, 0.0089, 0.0059, 0.0040, 0.0026 | 1.5 | YES | | morning (a.m.) harvest; SMT accepts this test | SLS-B12 |
| B13* Hill function w/unconstrained bottom | DF | AA61FL | 0.00892 | 0.0000223 | 0.237 | 1.66% | 5 | 1 | 0.9513 | 0.045, 0.030, 0.020, 0.0133, 0.0089, 0.0059, 0.0040, 0.0026 | 1.5 | YES | | afternoon (p.m.) harvest | SLS-B13 |
| B14* Hill function w/unconstrained bottom | DF | AA61FL | 0.00617 | 0.0000154 | 0.351 | 8.77% | 5 | 1 | 0.9223 | 0.045, 0.030, 0.020, 0.0133, 0.0089, 0.0059, 0.0040, 0.0026 | 1.5 | YES | | | SLS-B14 |
| B15* Hill function w/unconstrained bottom | DF | AA61FL | 0.00571 | 0.0000143 | 0.276 | 4.29% | 5 | 2 | 0.873 | 0.045, 0.030, 0.020, 0.0133, 0.0089, 0.0059, 0.0040, 0.0026 | 1.5 | NO | PC failed | | SLS-B15 |
| ***ECBC*** | | | | | | | | | | | | | | | |
| AA61JZ-A1 | RF | AA61JZ | NA | NA | 0.326 | 23.32% | 5 | 2 | 0.0097 | 10000, 1000, 100, 10, 1.0, 0.1, 0.01, 0.001 | 10 | RF | low r2; couldn't calc. ICx values; range finder | range finder | SLS-P3 |

# NHK NRU Reference Substance Data

| Experiment ID NHK Cells | Assay Type[1] | Substance ID | $IC_{50}$ (ug/mL) | $IC_{50}$ (mM) | Mean VC OD[2] | Difference of right/left VC from mean VC[3] | Number of Points 0 - 50 %[4] | Number of Points 50 - 100 %[5] | $R^2$ [6] | Exposure Concentrations (ug/mL)[7] | Dilution Factor[8] | Acceptable Tests[9] | Rationale for Unacceptability | Notes | PC ID |
|---|---|---|---|---|---|---|---|---|---|---|---|---|---|---|---|
| AA61JZ-A2 | RF | AA61JZ | NA | NA | 0.202 | 3.41% | 6 | 2 | NA | 10000, 1000, 100, 10, 1.0, 0.1, 0.01, 0.001 | 10 | NO | no r2 nor ICx values could be calculated | range finder | SLS-P5 |
| AA61JZ-B1 | DF | AA61JZ | 557 | 1.394 | 0.770 | 0.63% | 4 | 4 | 0.9016 | 10000, 4651.2, 2163.3, 1006.2, 468, 217.7, 101.2, 47.1 | 2.15 | NO | PC failed | | SLS-P11 |
| AA61JZ-B2 | DF | AA61JZ | 817 | 2.045 | 0.099 | 1.01% | 3 | 4 | 0.9437 | 10000, 4651.2, 2163.3, 1006.2, 468, 217.7, 101.2, 47.1 | 2.15 | NO | PC failed | | SLS-P13 |
| AA61JZ-B3 | DF | AA61JZ | 0.017 | 0.00004 | 0.089 | 9.22% | 1 | 2 | 0.4165 | 0.02140, 0.00995, 0.00463, 0.00215, 0.001, 0.00046, 0.00022, 0.0001 | 2.15 | NO | PC failed; low r2 | | SLS-P13 |
| AA61JZ-B4 | DF | AA61JZ | 0.012 | 0.00003 | 0.089 | 9.29% | 2 | 3 | 0.5530 | 0.0200, 0.0136, 0.0093, 0.0063, 0.0043, 0.0029, 0.0020, 0.0014 | 1.47 | NO | low r2 | | SLS-P15 |
| AA61JZ-B5 | DF | AA61JZ | 0.003 | 0.00001 | 0.884 | 5.21% | 5 | 3 | 0.8528 | 0.0200, 0.0136, 0.0093, 0.0063, 0.0043, 0.0029, 0.0020, 0.0014 | 1.47 | YES | | | SLS-P16 |
| AA61JZ-B6 | DF | AA61JZ | 0.011 | 0.00003 | 0.494 | 4.09% | 3 | 2 | 0.7228 | 0.0200, 0.0136, 0.0093, 0.0063, 0.0043, 0.0029, 0.0020, 0.0014 | 1.47 | YES | | | SLS-P18 |
| AA61JZ-B7 | DF | AA61JZ | 0.009 | 0.00002 | 0.687 | 1.01% | 4 | 3 | 0.7162 | 0.0200, 0.0136, 0.0093, 0.0063, 0.0043, 0.0029, 0.0020, 0.0014 | 1.47 | YES | | | SLS-P19 |
| ***FRAME*** | | | | | | | | | | | | | | | |
| FAL.NHK.NW.A1.010803 | RF | AA61NW | 0.198 | 0.00050 | 0.305 | 17.20% | 5 | 3 | 0.6953 | 10000, 1000, 100, 10, 1, 0.1, 0.01, 0.001 | | RF | range finder | SD says toxicity biphasic; chemical may be volatile | FAL.NHK.SLS.010803 |
| FAL.NHK.NW.B1.080803 | DF | AA61NW | 0.024 | 0.00006 | 0.713 | 705.50% | 7 | 1 | 0.6233 | 10000, 1000, 100, 10, 1, 0.1, 0.01, 0.001 | | NO | RF format | high background; biphasic response; determined ICx values with only 3 points | FAL.NHK.SLS.07.08.03 |
| FAL.NHK.NW.B2.15.08.03 | DF | AA61NW | 1.00 | 0.00250 | 0.510 | 4.47% | 6 | 1 | 0.5677 | 10000, 1000, 100, 10, 1, 0.1, 0.01, 0.001 | | NO | RF format; low r2 | biphasic response | FAL.NHK.SLS.15.08.03 |
| FAL.NHK.NW.B3.19.10.03 | DF | AA61NW | 0.008 | 0.00002 | 0.312 | 8.59% | 4 | 2 | 0.8637 | 0.100, 0.047, 0.022, 0.01006, 0.00468, 0.00218, 0.00101, 0.00047 | | YES | | | FAL.NHK.SLS.19.10.03 |
| FAL.NHK.NW.B4.23.10.03 | DF | AA61NW | 0.007 | 0.00002 | 0.340 | 0.96% | 4 | 1 | 0.9166 | 0.100, 0.047, 0.022, 0.01006, 0.00468, 0.00218, 0.00101, 0.00047 | | YES | | | FAL.NHK.SLS.23.10.03 |
| FAL.NHK.NW.B5.24.10.03 | DF | AA61NW | 0.008 | 0.00002 | 0.974 | 0.55% | 4 | 4 | 0.8869 | 0.100, 0.047, 0.022, 0.01006, 0.00468, 0.00218, 0.00101, 0.00047 | | YES | | | FAL.NHK.SLS.24.10.03 |

## CUPRIC SULFATE PENTAHYDRATE

| | | | | | | | | | | | | | | | |
|---|---|---|---|---|---|---|---|---|---|---|---|---|---|---|---|
| ***IIVS*** | | | | | | | | | | | | | | | |
| A1 | RF | AA61LA | NA | NA | 0.643 | 3.80% | 0 | 2 | NA | 100, 10, 1, 0.1, 0.01, 0.001, 0.0001, 0.00001 | 10 | RF | range finder; no points between 0 - 50% | | SLS-A2-N040320B |
| B1 | DF | AA61LA | 213 | 0.854 | 0.646 | 5.61% | 3 | 3 | 0.9907 | 750, 536, 383, 273, 195, 139, 99.6, 71.1 | 1.4 | YES | | ppt in 2X C1 (homogeneous blue suspension); ppt in 1X C1-C8 | SLS-B12-N041022B |
| B2 | DF | AA61LA | 199 | 0.797 | 0.583 | 1.02% | 3 | 3 | 0.9957 | 750, 536, 383, 273, 195, 139, 99.6, 71.1 | 1.4 | YES | | ppt in 2X C1; ppt in 1X C1-C8 | SLS-B113-N041029B |
| B3 | DF | AA61LA | 208 | 0.833 | 0.675 | 1.17% | 3 | 3 | 0.9811 | 750, 536, 383, 273, 195, 139, 99.6, 71.1 | 1.4 | YES | | ppt in 2X C1; ppt in 1X C1-C8 | SLS-B14-N041030A |
| ***ECBC*** | | | | | | | | | | | | | | | |
| AA61HX-A1 | RF | AA61HX | NA | NA | 0.487 | 1.42% | 0 | 1 | NA | 100, 10, 1, 0.1, 0.01, 0.001, 0.0001, 0.00001 | 10 | RF | range finder | | SLS-P6 |
| AA61HX-B1 | DF | AA61HX | 195 | 0.783 | 0.880 | 2.81% | 6 | 1 | 0.9370 | 500, 413, 342, 282, 233, 193, 159, 132 | 1.21 | YES | | | SLS-P47 |
| AA61HX-B2 | DF | AA61HX | 168 | 0.672 | 0.675 | 3.43% | 6 | 2 | 0.9871 | 500, 413, 342, 282, 233, 193, 159, 132 | 1.21 | YES | | | SLS-P48 |

# NHK NRU Reference Substance Data

| Experiment ID NHK Cells | Assay Type[1] | Substance ID | $IC_{50}$ (ug/mL) | $IC_{50}$ (mM) | Mean VC OD[2] | Difference of right/left VC from mean VC[3] | Number of Points 0 - 50 %[4] | Number of Points 50 - 100 %[5] | $R^2$ [6] | Exposure Concentrations (ug/mL)[7] | Dilution Factor[8] | Acceptable Tests[9] | Rationale for Unacceptability | Notes | PC ID |
|---|---|---|---|---|---|---|---|---|---|---|---|---|---|---|---|
| AA61HX-B3 | DF | AA61HX | 206 | 0.823 | 1.320 | 1.52% | 5 | 3 | 0.9814 | 500, 413, 342, 282, 233, 193, 159, 132 | 1.21 | YES | | | SLS-P50 |
| ***FRAME*** | | | | | | | | | | | | | | | |
| FAL.NHK.LP.A1.20.10 .04 | RF | AA61LP | 8.41 | 0.034 | 0.998 | 4.10% | 3 | 0 | 0.9793 | 1000, 100, 10, 1, 0.1, 0.01, 0.001, 0.0001 | 10 | RF | range finder ; no points between 50 - 100% | outlier removed by SD | FAL.NHK.SLS.20.10.04 |
| FAL.NHK.LP.B1.29.10.04 | DF | AA61LP | NA | NA | 0.545 | 7.44% | 0 | 1 | NA | 100, 46.5, 21.6, 10.1, 4.68, 2.18, 1.01, 0.47 | 2.15 | NO | no points between 0 - 50% | | FAL.NHK.SLS.29.10.04 |
| FAL.NHK.LP.B2.10.11.04 | DF | AA61LP | 189 | 0.756 | 1.026 | 0.20% | 5 | 3 | 0.9474 | 1000, 680, 463, 315, 214, 146, 99.1, 67.4 | 1.47 | YES | | outliers removed by SD | FAL.NHK.SLS.10.11.04 |
| FAL.NHK.LP.B3.12.11.04 | DF | AA61LP | 186 | 0.746 | 0.696 | 6.80% | 2 | 1 | 0.9794 | 500, 233, 108, 50.3, 23.4, 10.9, 5.1, 2.4 | 2.15 | YES | | | FAL.NHK.SLS.12.11.04 |
| FAL.NHK.LP.B4.17.11.04 | DF | AA61LP | 209 | 0.837 | 0.999 | 3.03% | 2 | 1 | 0.9822 | 500, 233, 108, 50.3, 23.4, 10.9, 5.1, 2.4 | 2.15 | YES | | | FAL.NHK.SLS.17.11.04 |

## CYCLOHEXIMIDE

| | | | | | | | | | | | | | | | |
|---|---|---|---|---|---|---|---|---|---|---|---|---|---|---|---|
| ***IIVS*** | | | | | | | | | | | | | | | |
| A1 | RF | AA61GL | 0.0589 | 0.0002 | 0.518 | 2.80% | 5 | 1 | 0.9832 | 1000, 100, 10, 1, 0.1, 0.01, 0.001, 0.0001 | 10 | RF | range finder | | SLS-A4-N040331N |
| B1 | DF | AA61GL | 0.0753 | 0.0003 | 0.534 | 1.79% | 4 | 3 | 0.9783 | 1.00, 0.455, 0.207, 0.094, 0.043, 0.019, 0.0088, 0.0040 | 2.2 | YES | | | SLS-B4-N040513C |
| B2 | DF | AA61GL | 0.0566 | 0.0002 | 0.499 | 1.72% | 4 | 4 | 0.9931 | 1.00, 0.455, 0.207, 0.094, 0.043, 0.019, 0.0088, 0.0040 | 2.2 | YES | | | SLS-B5-N040514B |
| B3 | DF | AA61GL | 0.0822 | 0.0003 | 0.712 | 3.28% | 4 | 2 | 0.9858 | 1.00, 0.455, 0.207, 0.094, 0.043, 0.019, 0.0088, 0.0040 | 2.2 | YES | | | SLS-B6-N040716A |
| ***ECBC*** | | | | | | | | | | | | | | | |
| AA61KK-A1 | RF | AA61KK | 0.0441 | 0.0002 | 0.456 | 2.74% | 6 | 1 | 0.9660 | 10000, 1000, 100, 10, 1, 0.1, 0.01, 0.001 | 10 | RF | range finder | | SLS-P17 |
| AA61KK-B1 | DF | AA61KK | 0.0558 | 0.0002 | 0.737 | 3.19% | 4 | 4 | 0.9741 | 1.00, 0.465, 0.216, 0.101, 0.047, 0.022, 0.010, 0.0005 | 2.15 | YES | | | SLS-P33 |
| AA61KK-B2 | DF | AA61KK | 0.0634 | 0.0002 | 0.823 | 3.39% | 4 | 4 | 0.9764 | 1.00, 0.465, 0.216, 0.101, 0.047, 0.022, 0.010, 0.005 | 2.15 | YES | | | SLS-P35 |
| AA61KK-B3 | DF | AA61KK | 0.0401 | 0.0001 | 0.418 | 6.74% | 5 | 3 | 0.9655 | 1.00, 0.465, 0.216, 0.101, 0.047, 0.022, 0.010, 0.005 | 2.15 | YES | | | SLS-P36 |
| ***FRAME*** | | | | | | | | | | | | | | | |
| FAL.NHK.PF.A1.28.07.04 | RF | AA61PF | 0.0873 | 0.0003 | 0.042 | 0.79% | 4 | 2 | 0.8106 | 10000, 1000, 100, 10, 1, 0.1, 0.01, 0.001 | 10 | RF | range finder | | FAL.NHK.SLS.28.07.04 |
| FAL.NHK.PF.B1.12.08.04 | DF | AA61PF | 0.432 | 0.0015 | 0.862 | 1.46% | 6 | 2 | 0.9511 | 100, 31.6, 10.0, 3.17, 1.00, 0.317, 0.100, 0.0318 | 3.16 | NO | PC failed | | FAL.NHK.SLS.12.08.04 |
| FAL.NHK.PF-NB.B2.25.08.04 | DF | AA61PF | 0.0675 | 0.0002 | 1.104 | 1.57% | 7 | 1 | 0.9690 | 100, 31.6, 10.0, 3.17, 1.00, 0.317, 0.100, 0.0318 | 3.16 | YES | | | FAL.NHK.SLS.25.08.04 |
| FAL.NHK.PF.B3.20.10 .04 | DF | AA61PF | 0.2285 | 0.0010 | 1.179 | 5.59% | 5 | 3 | 0.9771 | 10.0, 4.65, 2.16, 1.01, 0.468, 0.218, 0.101, 0.047 | 2.15 | YES | | | FAL.NHK.SLS.20.10.04 |
| FAL.NHK.PF.B4.29.10.04 | DF | AA61PF | NA | 0.0000 | 0.507 | 2.36% | 8 | 0 | 0.9378 | 10.0, 4.65, 2.16, 1.01, 0.468, 0.218, 0.101, 0.047 | 2.15 | NO | no points between 50 - 100% | toxicity curve doesn't go above 20% viability | FAL.NHK.SLS.29.10.04 |
| FAL.NHK.PF.B5.05.11.04 | DF | AA61PF | NA | NA | 0.475 | 3.35% | 6 | 0 | NA | 10.0, 4.65, 2.16, 1.01, 0.468, 0.218, 0.101, 0.047 | 2.15 | NO | no points between 50 - 100% | | FAL.NHK.SLS.05.11.04 |
| FAL.NHK.PF.B6.12.11.04 | DF | AA61PF | 0.0647 | 0.0002 | 0.725 | 2.10% | 4 | 4 | 0.9513 | 1.00, 0.47, 0.22, 0.10, 0.05, 0.02, 0.010, 0.0047 | 2.15 | YES | | | FAL.NHK.SLS.12.11.04 |

# NHK NRU Reference Substance Data

| Experiment ID NHK Cells | Assay Type[1] | Substance ID | $IC_{50}$ (ug/mL) | $IC_{50}$ (mM) | Mean VC OD[2] | Difference of right/left VC from mean VC[3] | Number of Points 0 - 50 %[4] | Number of Points 50 - 100 %[5] | $R^2$ [6] | Exposure Concentrations (ug/mL)[7] | Dilution Factor[8] | Acceptable Tests[9] | Rationale for Unacceptability | Notes | PC ID |
|---|---|---|---|---|---|---|---|---|---|---|---|---|---|---|---|
| **DIBUTYL PHTHALATE** | | | | | | | | | | | | | | | |
| ***IIVS*** | | | | | | | | | | | | | | | |
| A1 | RF | AA61FD | 25.2 | 0.090 | 0.684 | 8.39% | 2 | 1 | 0.9676 | 1000, 100, 10, 1, 0.1, 0.01, 0.001, 0.0001 | 10 | RF | range finder | ppt in 1X C1-C2; ppt in 2X C1-C2 | SLS-A3-N040331A |
| B1 | DF | AA61FD | 23.2 | 0.083 | 0.562 | 2.55% | 5 | 3 | 0.9704 | 1000, 455, 207, 93.9, 42.7, 19.4, 8.82, 4.01 | 2.2 | YES | | ppt in 1X C1-C4; ppt in 2X C1-C5 | SLS-B1-N040423A |
| B2 | DF | AA61FD | 22.3 | 0.080 | 0.613 | 1.33% | 3 | 3 | 0.9866 | 1000, 455, 207, 93.9, 42.7, 19.4, 8.82, 4.01 | 2.2 | YES | | ppt in 1X C1-C5; ppt in 2X C1-C5 | SLS-B2-N040424A |
| B3 | DF | AA61FD | 20.6 | 0.074 | 0.515 | 7.46% | 4 | 4 | 0.9634 | 200, 111, 61.7, 34.3, 19.1, 10.6, 5.88, 3.27 | 1.8 | YES | | ppt in 1X C1-C4; ppt in 2X C1-C4 | SLS-B3-N040506A |
| ***ECBC*** | | | | | | | | | | | | | | | |
| AA61JX-A1 | RF | AA61JX | 26.8 | 0.096 | 0.892 | 1.40% | 2 | 2 | 0.9594 | 1000, 100, 10, 1, 0.1, 0.01, 0.001, 0.0001 | 10 | RF | range finder | ppt in 2X C2 | SLS-P15 |
| AA61JX-B1 | DF | AA61JX | 34.0 | 0.122 | 0.957 | 0.03% | 3 | 5 | 0.9281 | 200, 93.0, 43.3, 20.1, 9.4, 4.4, 2.0, 0.9 | 2.15 | YES | | | SLS-P46 |
| AA61JX-B2 | DF | AA61JX | 19.6 | 0.071 | 0.698 | 0.13% | 3 | 5 | 0.9518 | 200, 93.0, 43.3, 20.1, 9.4, 4.4, 2.0, 0.9 | 2.15 | YES | | ppt in 2X C2; 1X C1-C3 has small chunks-possibly chemical crystals | SLS-P49 |
| AA61JX-B3 | DF | AA61JX | 31.2 | 0.112 | 1.251 | 5.20% | 3 | 4 | 0.9461 | 200, 93.0, 43.3, 20.1, 9.4, 4.4, 2.0, 0.9 | 2.15 | YES | | chunks of chemical in 1X C1-C3; ppt in 2X C4 | SLS-P51 |
| ***FRAME*** | | | | | | | | | | | | | | | |
| FAL.NHK.MK.A1.14.05.04 | RF | AA61MK | 152 | 0.546 | 0.692 | 8.77% | 1 | 1 | 0.7744 | 1000, 100, 10, 1, 0.1, 0.01, 0.001, 0.0001 | 10 | RF | range finder | ppt in 1X C1 | FAL.NHK.SLS.14.05.03 |
| FAL.NHK.MK.B1.19.08.04 nb | DF | AA61MK | NA | NA | 0.342 | 2.58% | 8 | 0 | 0.0000 | 2000, 1361, 926, 630, 428, 291, 198, 135 | 1.47 | NO | no points between 50 - 100% | ppt in 1X C1-C8 | FAL.NHK.SLS-NB.19.08.04 |
| FAL.NHK.MK-RB.B2.25.08.04 | DF | AA61MK | 17.5 | 0.063 | 0.972 | 4.85% | 4 | 4 | 0.9053 | 500, 233, 108, 50.3, 23.4, 10.9, 5.1, 2.4 | 2.15 | YES | | | FAL.NHK.SLS-RB.20.08.04 |
| FAL.NHK.MK.B3.07.10.04 | DF | AA61MK | 39.7 | 0.143 | 0.602 | 7.72% | 4 | 4 | 0.9531 | 500, 233, 108, 50.3, 23.4, 10.9, 5.1, 2.4 | 2.15 | YES | | ppt in 1X C1-C5 | FAL.NHK.SLS.07.10.03 |
| FAL.NHK.MK.B4.20.10 .04 | DF | AA61MK | 84.9 | 0.305 | 1.289 | 5.24% | 3 | 3 | 0.9716 | 500, 233, 108, 50.3, 23.4, 10.9, 5.1, 2.4 | 2.15 | YES | | ppt in 1X C1-C4 | FAL.NHK.SLS.20.10.04 |
| **DICHLORVOS** | | | | | | | | | | | | | | | |
| ***IIVS*** | | | | | | | | | | | | | | | |
| A1 | RF | AA61NP | 12.6 | 0.057 | 0.702 | 59.99% | 2 | 1 | 0.9650 | 1000, 100, 10, 1, 0.1, 0.01, 0.001, 0.0001 | 10 | RF | range finder; % VC difference > 15 | volatility problem; VC1 OD values much lower than VC2; VC1 removed from subsequent analysis by SD | SLS-A3-N040331A |
| B1 | DF | AA61NP | 12.1 | 0.055 | 0.599 | 10.60% | 5 | 3 | 0.9934 | 500, 227,103, 47.0, 21.3, 9.70, 4.41, 2.00 | 2.2 | YES | | | SLS-B1-N040423A |
| B2 | DF | AA61NP | 11.9 | 0.054 | 0.627 | 7.89% | 4 | 3 | 0.9912 | 500, 227,103, 47.0, 21.3, 9.70, 4.41, 2.00 | 2.2 | YES | | used plate sealer | SLS-B2-N040424A |
| B3 | DF | AA61NP | 12.7 | 0.057 | 0.581 | 1.03% | 4 | 2 | 0.9802 | 200, 90.9, 41.3, 18.8, 8.54, 3.88, 1.76, 0.802 | 2.2 | YES | | used plate sealer | SLS-B3-N040506A |
| ***ECBC*** | | | | | | | | | | | | | | | |
| AA61PZ-A1 | RF | AA61PZ | NA | NA | 0.532 | 72.53% | 1 | 2 | NA | 1000, 100, 10, 1, 0.1, 0.01, 0.001, 0.0001 | 10 | RF | range finder | | SLS-P15 |
| AA61PZ-B1(sealer) | DF | AA61PZ | 8.44 | 0.038 | 0.631 | 6.94% | 4 | 4 | 0.9304 | 100, 46.5, 21.6, 10.1, 4.68, 2.18, 1.01, 0.47 | 2.15 | YES | | | SLS-P32 |
| AA61PZ-B2 (sealer) | DF | AA61PZ | 10.9 | 0.049 | 0.860 | 3.50% | 3 | 5 | 0.9861 | 100, 46.5, 21.6, 10.1, 4.68, 2.18, 1.01, 0.47 | 2.15 | YES | | | SLS-P34 |
| AA61PZ-B3 (sealer) | DF | AA61PZ | 6.35 | 0.029 | 0.381 | 4.51% | 4 | 4 | 0.9428 | 100, 46.5, 21.6, 10.1, 4.68, 2.18, 1.01, 0.47 | 2.15 | YES | | | SLS-P36 |
| ***FRAME*** | | | | | | | | | | | | | | | |
| FAL.NHK.HS.A1.14.05.04 | RF | AA61HS | 9.55 | 0.043 | 0.391 | 72.35% | 3 | 0 | 0.4969 | 1000, 100, 10, 1, 0.1, 0.01, 0.001, 0.0001 | 10 | RF | range finder; %VC difference > 0; no points between 50 - 100% | volatility problem | FAL.NHK.SLS.14.05.03 |
| FAL.NHK.HS.B1.25.06.04 | DF | AA61HS | 13.2 | 0.060 | 1.094 | 9.37% | 2 | 3 | 0.9630 | 50.0, 23.3, 10.8, 5.03, 2.34, 1.09, 0.506, 0.235 | 2.15 | YES | | | FAL.NHK.SLS.25.06.04 |

# NHK NRU Reference Substance Data

| Experiment ID NHK Cells | Assay Type[1] | Substance ID | $IC_{50}$ (ug/mL) | $IC_{50}$ (mM) | Mean VC OD[2] | Difference of right/left VC from mean VC[3] | Number of Points 0 - 50 %[4] | Number of Points 50 - 100 %[5] | $R^2$ [6] | Exposure Concentrations (ug/mL)[7] | Dilution Factor[8] | Acceptable Tests[9] | Rationale for Unacceptability | Notes | PC ID |
|---|---|---|---|---|---|---|---|---|---|---|---|---|---|---|---|
| FAL.NHK.HS.B2.12.08.04 | DF | AA61HS | 18.9 | 0.085 | 0.677 | 5.08% | 2 | 2 | 0.6304 | 50.0, 23.3, 10.8, 5.03, 2.34, 1.09, 0.506, 0.235 | 2.15 | NO | PC failed | | FAL.NHK.SLS.12.08.04 |
| FAL.NHK.HS.B3.19.08.04 nb | DF | AA61HS | NA | NA | 0.510 | 1.27% | 0 | 7 | 0.0466 | 50.0, 23.3, 10.8, 5.03, 2.34, 1.09, 0.506, 0.235 | 2.15 | NO | no points between 0 - 50% | no toxicity detected; SD removed column of data; odd toxicity curve | FAL.NHK.SLS-NB.19.08.04 |
| FAL.NHK.HS-RB.B4.25.08.04 | DF | AA61HS | 15.7 | 0.071 | 0.773 | 1.27% | 2 | 1 | 0.6376 | 50.0, 23.3, 10.8, 5.03, 2.34, 1.09, 0.506, 0.235 | 2.15 | YES | | | FAL.NHK.SLS-RB.20.08.04 |
| FAL.NHK.HS.B5.27.08.04 | DF | AA61HS | 8.35 | 0.038 | 0.506 | 9.96% | 2 | 6 | 0.8021 | 50.0, 23.3, 10.8, 5.03, 2.34, 1.09, 0.506, 0.235 | 2.15 | YES | | | FAL.NHK.SLS.27.08.04 |

## DIETHYL PHTHALATE

| | | | | | | | | | | | | | | | |
|---|---|---|---|---|---|---|---|---|---|---|---|---|---|---|---|
| ***IIVS*** | | | | | | | | | | | | | | | |
| A1 | RF | AA61NX | 116 | 0.523 | 0.556 | 0.99% | 1 | 1 | 0.8983 | 1000, 100, 10, 1, 0.1, 0.01, 0.001, 0.0001 | 10 | RF | range finder | ppt in 2X C1-C2 | SLS-A4-N040331N |
| B1 | DF | AA61NX | 192 | 0.863 | 0.570 | 3.77% | 3 | 4 | 0.9757 | 1000, 556, 309, 171, 95.3, 52.9, 29.4, 16.3 | 1.8 | YES | | | SLS-B4-N040513C |
| B2 | DF | AA61NX | 221 | 0.996 | 0.505 | 1.47% | 3 | 3 | 0.9758 | 1000, 556, 309, 171, 95.3, 52.9, 29.4, 16.3 | 1.8 | YES | | ppt in 2X C1 | SLS-B5-N040514B |
| B3 | DF | AA61NX | 155 | 0.695 | 0.790 | 6.15% | 3 | 3 | 0.9904 | 1000, 556, 309, 171, 95.3, 52.9, 29.4, 16.3 | 1.8 | YES | | | SLS-B6-N040716A |
| ***ECBC*** | | | | | | | | | | | | | | | |
| AA61GA-A1 | RF | AA61GA | 122 | 0.551 | 0.898 | 5.79% | 1 | 3 | 0.9642 | 1000, 100, 10, 1, 0.1, 0.01, 0.001, 0.0001 | 10 | RF | range finder | ppt in 2X C1 | SLS-P14 |
| AA61GA-B1 | DF | AA61GA | 168 | 0.757 | 1.039 | 5.26% | 2 | 4 | 0.9636 | 800, 372, 173, 80.5, 37.4, 17.4, 8.1, 3.8 | 2.15 | YES | | | SLS-P27 |
| AA61GA-B2 | DF | AA61GA | 163 | 0.732 | 0.920 | 1.89% | 3 | 2 | 0.9498 | 800, 372, 173, 80.5, 37.4, 17.4, 8.1, 3.8 | 2.15 | YES | | ppt in 2X C1-C2 | SLS-P29 |
| AA61GA-B3 | DF | AA61GA | 190 | 0.854 | 0.776 | 1.33% | 2 | 3 | 0.9633 | 800, 372, 173, 80.5, 37.4, 17.4, 8.1, 3.8 | 2.15 | YES | | ppt in 2X C1-C2; oily | SLS-P30 |
| ***FRAME*** | | | | | | | | | | | | | | | |
| FAL.NHK.KZ.A1.28.07.04 | RF | AA61KZ | 124 | 0.560 | 0.079 | 10.77% | 1 | 1 | 0.6487 | 1000, 100, 10, 1, 0.1, 0.01, 0.001, 0.0001 | 10 | RF | range finder | | FAL.NHK.SLS.28.07.04 |
| FAL.NHK.KZ.B1.11.08.04 | DF | AA61KZ | 27.7 | 0.125 | 0.765 | 6.15% | 1 | 2 | 0.9160 | 2000, 930, 433, 201, 94, 44, 20, 9 | 2.15 | YES | | ppt in 2X C1-C4 and 1X C1-C4 | FAL.NHK.SLS.11.08.04 |
| FAL.NHK.KZ.B2.08.10.04 | DF | AA61KZ | 147 | 0.660 | 0.737 | 18.98% | 2 | 5 | 0.9382 | 500, 233, 108, 50.3, 23.4, 10.9, 5.06, 2.35 | 2.15 | NO | % VC difference > 15 | volatility issue; incorrect solvent listed in Addendum III; SD corrected | FAL.NHK.SLS.08.10.03 |
| FAL.NHK.KZ.B3.22.10.04 | DF | AA61KZ | 149 | 0.670 | 0.731 | 9.65% | 2 | 4 | 0.9568 | 500, 233, 108, 50.3, 23.4, 10.9, 5.06, 2.35 | 2.15 | YES | | | FAL.NHK.SLS.22.10.04 (MO) |
| FAL.NHK.KZ.B4.28.10.04 | DF | AA61KZ | 37.9 | 0.171 | 0.650 | 11.96% | 4 | 4 | 0.9425 | 500, 233, 108, 50.3, 23.4, 10.9, 5.06, 2.35 | 2.15 | YES | | | FAL.NHK.SLS.28.10.04 |

## DIGOXIN

| | | | | | | | | | | | | | | | |
|---|---|---|---|---|---|---|---|---|---|---|---|---|---|---|---|
| ***IIVS*** | | | | | | | | | | | | | | | |
| A1 | RF | AA61MF | 0.00075 | 0.0000010 | 0.695 | 0.29% | 7 | 0 | 0.9294 | 1000, 100, 10, 1, 0.1, 0.01, 0.001, 0.0001 | 10 | RF | range finder; no points between 50 - 100% | ppt in 1X C1 and 2X C1 | SLS-A3-N040331A |
| B1 | DF | AA61MF | 0.00390 | 0.0000050 | 0.575 | 3.87% | 3 | 1 | 0.9597 | 0.020, 0.0091, 0.0041, 0.0019, 0.00085, 0.00039, 0.00018, 0.000080 | 2.2 | YES | | | SLS-B4-N040513C |
| B2 | DF | AA61MF | 0.00374 | 0.0000048 | 0.543 | 0.21% | 3 | 1 | 0.9615 | 0.020, 0.0091, 0.0041, 0.0019, 0.00085, 0.00039, 0.00018, 0.000080 | 2.2 | YES | | outlier removed by SD | SLS-B5-N040514B |
| B3 | DF | AA61MF | 0.00431 | 0.0000055 | 0.804 | 1.90% | 2 | 3 | 0.9848 | 0.020, 0.0091, 0.0041, 0.0019, 0.00085, 0.00039, 0.00018, 0.000080 | 2.2 | YES | | | SLS-B6-N040716A |
| ***ECBC*** | | | | | | | | | | | | | | | |

# NHK NRU Reference Substance Data

| Experiment ID NHK Cells | Assay Type[1] | Substance ID | $IC_{50}$ (ug/mL) | $IC_{50}$ (mM) | Mean VC OD[2] | Difference of right/left VC from mean VC[3] | Number of Points 0 - 50 %[4] | Number of Points 50 - 100 %[5] | $R^2$ [6] | Exposure Concentrations (ug/mL)[7] | Dilution Factor[8] | Acceptable Tests[9] | Rationale for Unacceptability | Notes | PC ID |
|---|---|---|---|---|---|---|---|---|---|---|---|---|---|---|---|
| AA61PP-A1 | RF | AA61PP | 0.00865 | 0.0000111 | 1.002 | 8.88% | 5 | 0 | 0.9920 | 1000, 100, 10, 1, 0.1, 0.01, 0.001, 0.0001 | 10 | RF | range finder; no points between 50 - 100% | ppt in 1X C1 and 2X C1 | SLS-P13 |
| AA61PP-B1 | DF | AA61PP | 0.00518 | 0.0000066 | 0.864 | 4.37% | 4 | 4 | 0.9591 | 0.100, 0.0465, 0.0216, 0.0101, 0.0047, 0.0022, 0.0010, 0.0005 | 2.15 | YES | | | SLS-P33 |
| AA61PP-B2 | DF | AA61PP | 0.00615 | 0.0000079 | 0.890 | 1.28% | 4 | 4 | 0.9932 | 0.100, 0.0465, 0.0216, 0.0101, 0.0047, 0.0022, 0.0010, 0.0005 | 2.15 | YES | | | SLS-P35 |
| AA61PP-B3 | DF | AA61PP | 0.00481 | 0.0000062 | 0.477 | 0.96% | 5 | 2 | 0.9770 | 0.100, 0.0465, 0.0216, 0.0101, 0.0047, 0.0022, 0.0010, 0.0005 | 2.15 | YES | | | SLS-P37 |
| ***FRAME*** | | | | | | | | | | | | | | | |
| FAL.NHK.HN.A1.14.05.04 | RF | AA61HN | 0.00002 | 0.0000000 | 0.756 | 7.58% | 5 | 0 | 0.9437 | 1000, 100, 10, 1, 0.1, 0.01, 0.001, 0.0001 | 10 | RF | range finder | outlier removed by SD; ppt in 1X C1-C2 | FAL.NHK.SLS.14.05.03 |
| FAL.NHK.HN.B1.25.06.04 | DF | AA61HN | 0.00006 | 0.0000001 | 1.205 | 0.03% | 4 | 3 | 0.9543 | 0.0010000, 0.0004651, 0.0002163, 0.0001006, 0.0000468, 0.0000218, 0.0000101, 0.0000047 | 2.15 | YES | | | FAL.NHK.SLS.25.06.04 |
| FAL.NHK.HN.B2.20.08.04 | DF | AA61HN | 0.00006 | 0.0000001 | 0.845 | 3.03% | 4 | 3 | 0.9762 | 0.0010000, 0.0004651, 0.0002163, 0.0001006, 0.0000468, 0.0000218, 0.0000101, 0.0000047 | 2.15 | YES | | row C data removed by SD; most of wells were outliers | FAL.NHK.SLS.20.08.04 |
| FAL.NHK.HN.B3.27.08.04 | DF | AA61HN | 0.00003 | 0.0000000 | 0.404 | 5.62% | 5 | 3 | 0.9091 | 0.0010000, 0.0004651, 0.0002163, 0.0001006, 0.0000468, 0.0000218, 0.0000101, 0.0000047 | 2.15 | YES | | | FAL.NHK.SLS.27.08.04 |

## DIMETHYLFORMAMIDE

| | | | | | | | | | | | | | | | |
|---|---|---|---|---|---|---|---|---|---|---|---|---|---|---|---|
| ***IIVS*** | | | | | | | | | | | | | | | |
| A1 | RF | AA61FN | 5750 | 78.720 | 0.495 | 3.49% | 1 | 1 | 0.8849 | 10000, 1000, 100, 10, 1, 0.1, 0.01, 0.001 | 10 | RF | range finder | | SLS-A5-N040401A |
| B1 | DF | AA61FN | 6180 | 84.544 | 0.553 | 1.90% | 3 | 4 | 0.9725 | 15000, 10714, 7653, 5466, 3905, 2789, 1992, 1423 | 1.4 | YES | | ppt in 1X C1 | SLS-B8-N040819A |
| B2 | DF | AA61FN | 6580 | 89.967 | 0.543 | 5.48% | 3 | 3 | 0.9801 | 15000, 10714, 7653, 5466, 3905, 2789, 1992, 1423 | 1.4 | YES | | ppt in 1X C1 | SLS-B9-N040820A |
| B3 | DF | AA61FN | 6430 | 87.919 | 0.544 | 0.29% | 3 | 3 | 0.9823 | 15000, 10714, 7653, 5466, 3905, 2789, 1992, 1423 | 1.4 | YES | | | SLS-B10-N040903A |
| ***ECBC*** | | | | | | | | | | | | | | | |
| AA61MW-A1 | RF | AA61MW | NA | NA | 0.773 | 5.14% | 1 | 0 | NA | 10000, 1000, 100, 10, 1, 0.1, 0.01, 0.001 | 10 | RF | range finder; no points between 50 - 100% | | SLS-P19 |
| AA61MW-B1 | DF | AA61MW | 9350 | 127.962 | 0.595 | 0.67% | 2 | 4 | 0.9730 | 30000, 20408, 13883, 9444, 6425, 4371, 2973, 2023 | 1.47 | YES | | | SLS-P40 |
| AA61MW-B2 | DF | AA61MW | 9510 | 130.042 | 0.722 | 1.78% | 3 | 4 | 0.9847 | 30000, 20408, 13883, 9444, 6425, 4371, 2973, 2023 | 1.47 | YES | | | SLS-P42 |
| AA61MW-B3 | DF | AA61MW | 9200 | 125.916 | 0.961 | 1.49% | 2 | 4 | 0.9788 | 30000, 20408, 13883, 9444, 6425, 4371, 2973, 2023 | 1.47 | YES | | | SLS-P44 |
| ***FRAME*** | | | | | | | | | | | | | | | |
| FAL.NHK.KF.A1.24.09.04 | RF | AA61KF | 1940 | 26.551 | 0.501 | 2.32% | 1 | 1 | 0.3487 | 10000, 1000, 100, 10, 1.0, 0.1, 0.01, 0.001 | 10 | RF | range finder | | FAL.NHK.SLS.24.09.03 |
| FAL.NHK.KF.B1.01.10.04 | DF | AA61KF | 7690 | 105.216 | 0.990 | 2.68% | 1 | 7 | 0.9741 | 15000, 6977, 3245, 1509, 702, 327, 152, 70.6 | 2.15 | NO | PC failed | | FAL.NHK.SLS.01.10.04 |
| FAL.NHK.KF.B2.10.11.04 | DF | AA61KF | 7930 | 108.413 | 1.031 | 2.19% | 1 | 4 | 0.9290 | 15000, 6977, 3245, 1509, 702, 327, 152, 70.6 | 2.15 | YES | | ppt In 2X C1-C5 | FAL.NHK.SLS.10.11.04 |

# NHK NRU Reference Substance Data

| Experiment ID NHK Cells | Assay Type[1] | Substance ID | $IC_{50}$ (ug/mL) | $IC_{50}$ (mM) | Mean VC OD[2] | Difference of right/left VC from mean VC[3] | Number of Points 0 - 50 %[4] | Number of Points 50 - 100 %[5] | $R^2$ [6] | Exposure Concentrations (ug/mL)[7] | Dilution Factor[8] | Acceptable Tests[9] | Rationale for Unacceptability | Notes | PC ID |
|---|---|---|---|---|---|---|---|---|---|---|---|---|---|---|---|
| FAL.NHK.KF.B3.12.11.04 | DF | AA61KF | 6040 | 82.620 | 0.668 | 16.78% | 1 | 2 | 0.8929 | 15000, 6977, 3245, 1509, 702, 327, 152, 70.6 | 2.15 | NO | %VC difference >15 | outliers removed bySD | FAL.NHK.SLS.12.11.04 |
| FAL.NHK.KF.B4.17.11.04 | DF | AA61KF | 7780 | 106.435 | 1.146 | 1.64% | 1 | 2 | 0.9281 | 15000, 6977, 3245, 1509, 702, 327, 152, 70.6 | 2.15 | YES | | | FAL.NHK.SLS.17.11.04 |
| FAL.NHK.KF.B5.19.11.04 | DF | AA61KF | 7740 | 105.946 | 0.465 | 5.14% | 1 | 2 | 0.8514 | 15000, 6977, 3245, 1509, 702, 327, 152, 70.6 | 2.15 | YES | | outliers removed bySD | FAL.NHK.SLS.19.11.04 |
| **DIQUAT DIBROMIDE MONOHYDRATE** | | | | | | | | | | | | | | | |
| ***IIVS*** | | | | | | | | | | | | | | | |
| A1 | RF | AA61GN | 5.71 | 0.016 | 0.711 | 0.12% | 4 | 2 | 0.9904 | 10000, 1000, 100, 10, 1, 0.1, 0.01, 0.001 | 10 | RF | range finder | | SLS-A3-N040331A |
| B1 | DF | AA61GN | 4.10 | 0.011 | 0.570 | 1.86% | 6 | 2 | 0.9823 | 100, 55.6, 30.9, 17.1, 9.53, 5.29, 2.94, 1.63 | 1.8 | YES | | | SLS-B4-N040513C |
| B2 | DF | AA61GN | 3.49 | 0.010 | 0.513 | 5.54% | 6 | 2 | 0.9793 | 100, 55.6, 30.9, 17.1, 9.53, 5.29, 2.94, 1.63 | 1.8 | YES | | | SLS-B5-N040514B |
| B3 | DF | AA61GN | 3.92 | 0.011 | 0.652 | 0.15% | 4 | 2 | 0.9871 | 100, 55.6, 30.9, 17.1, 9.53, 5.29, 2.94, 1.63 | 1.8 | YES | | | SLS-B6-N040716A |
| ***ECBC*** | | | | | | | | | | | | | | | |
| AA61KS-A1 | RF | AA61KS | 3.04 | 0.008 | 0.862 | 7.32% | 4 | 4 | 0.9730 | 10000, 1000, 100, 10, 1, 0.1, 0.01, 0.001 | 10 | RF | range finder | | SLS-P14 |
| AA61KS-B1 | DF | AA61KS | 3.62 | 0.010 | 0.671 | 2.01% | 5 | 3 | 0.9904 | 100, 46.5, 21.6, 10.1, 4.68, 2.18, 1.01, 0.47 | 2.15 | YES | | | SLS-P33 |
| AA61KS-B2 | DF | AA61KS | 4.40 | 0.012 | 0.570 | 0.19% | 5 | 2 | 0.9601 | 100, 46.5, 21.6, 10.1, 4.68, 2.18, 1.01, 0.47 | 2.15 | YES | | | SLS-P34 |
| AA61KS-B3 | DF | AA61KS | 2.75 | 0.008 | 0.361 | 4.41% | 5 | 3 | 0.9603 | 100, 46.5, 21.6, 10.1, 4.68, 2.18, 1.01, 0.47 | 2.15 | YES | | | SLS-P36 |
| ***FRAME*** | | | | | | | | | | | | | | | |
| FAL.NHK.NV.A1.14.05.04 | RF | AA61NV | 3.88 | 0.011 | 0.640 | 4.87% | 4 | 1 | 0.9854 | 10000, 1000, 100, 10, 1, 0.1, 0.01, 0.001 | 10 | RF | range finder | | FAL.NHK.SLS.14.05.03 |
| FAL.NHK.NV.B1.12.08.04 | DF | AA61NV | 7.22 | 0.020 | 0.899 | 3.27% | 6 | 2 | 0.9571 | 500, 233, 108, 50.3, 23.4, 10.9, 5.1, 2.4 | 2.15 | NO | PC failed | row of data removed from analysis by the SD due to low cell growth | FAL.NHK.SLS.12.08.04 |
| FAL.NHK.NV.B2.19.08.04 rb | DF | AA61NV | 43.3 | 0.119 | 0.271 | 2.15% | 4 | 1 | 0.7846 | 500, 233, 108, 50.3, 23.4, 10.9, 5.1, 2.4 | 2.15 | NO | PC failed | | FAL.NHK.SLS-RB.19.08.04 |
| FAL.NHK.NV.B3.20.08.04 | DF | AA61NV | 6.09 | 0.017 | 0.762 | 8.68% | 6 | 2 | 0.9750 | 500, 233, 108, 50.3, 23.4, 10.9, 5.1, 2.4 | 2.15 | YES | | row C data removed by SD; several wells were outliers | FAL.NHK.SLS.20.08.04 |
| FAL.NHK.NV-RB.B4.25.08.04 | DF | AA61NV | 11.9 | 0.033 | 0.583 | 7.52% | 5 | 3 | 0.9780 | 500, 233, 108, 50.3, 23.4, 10.9, 5.1, 2.4 | 2.15 | YES | | | FAL.NHK.SLS-RB.20.08.04 |
| FAL.NHK.NV.B5.27.08.04 | DF | AA61NV | 0.812 | 0.002 | 0.493 | 3.41% | 7 | 0 | 0.8924 | 500, 233, 108, 50.3, 23.4, 10.9, 5.1, 2.4 | 2.15 | NO | no points between 50 - 100% | | FAL.NHK.SLS.27.08.04 |
| FAL.NHK.NV.30.09.04 | DF | AA61NV | 2.97 | 0.008 | 0.677 | 0.21% | 5 | 3 | 0.9830 | 100, 46.5, 21.6, 10.1, 4.68, 2.18, 1.01, 0.47 | 2.15 | YES | | | FAL.NHK.SLS.30.09.03 |
| FAL.NHK.NV.B7.07.10.04 | DF | AA61NV | 6.13 | 0.017 | 0.665 | 1.98% | 4 | 4 | 0.9794 | 100, 46.5, 21.6, 10.1, 4.68, 2.18, 1.01, 0.47 | 2.15 | YES | | | FAL.NHK.SLS.07.10.03 |
| **DISULFOTON** | | | | | | | | | | | | | | | |
| ***IIVS*** | | | | | | | | | | | | | | | |
| A1 | RF | AA61FC | 140 | 0.509 | 0.559 | 3.49% | 1 | 2 | 0.5182 | 1000, 100, 10, 1, 0.1, 0.01, 0.001, 0.0001 | 10 | RF | range finder | ppt in 2X C2 | SLS-A4-N040331N |

# NHK NRU Reference Substance Data

| Experiment ID NHK Cells | Assay Type[1] | Substance ID | $IC_{50}$ (ug/mL) | $IC_{50}$ (mM) | Mean VC OD[2] | Difference of right/left VC from mean VC[3] | Number of Points 0 - 50 %[4] | Number of Points 50 - 100 %[5] | $R^2$ [6] | Exposure Concentrations (ug/mL)[7] | Dilution Factor[8] | Acceptable Tests[9] | Rationale for Unacceptability | Notes | PC ID |
|---|---|---|---|---|---|---|---|---|---|---|---|---|---|---|---|
| B1 | DF | AA61FC | 176 | 0.641 | 0.619 | 10.61% | 4 | 4 | 0.9647 | 2000, 909, 413, 188, 85.4, 38.8, 17.6, 8.02 | 2.2 | YES | | ppt in 1X C1-C5; ppt in 2X C1-C7; visual observations of the cells are different from the NRU viability results. | SLS-B12-N041022B |
| B2 | DF | AA61FC | 133 | 0.486 | 0.566 | 5.12% | 4 | 4 | 0.9650 | 2000, 909, 413, 188, 85.4, 38.8, 17.6, 8.02 | 2.2 | YES | | ppt in 1X C1-C6; ppt in 2X C1-C6; | SLS-B113-N041029B |
| B3 | DF | AA61FC | 250 | 0.911 | 0.668 | 3.22% | 3 | 5 | 0.9138 | 2000, 909, 413, 188, 85.4, 38.8, 17.6, 8.02 | 2.2 | YES | | ppt in 1X C1-C5; ppt in 2X C1-C6; | SLS-B14-N041030A |
| ***ECBC*** | | | | | | | | | | | | | | | |
| AA61NY-A1 | RF | AA61NY | NA | NA | 0.798 | 10.85% | 1 | 3 | NA | 1000, 100, 10, 1, 0.1, 0.01, 0.001, 0.0001 | 10 | RF | range finder | ppt in 2X C2 | SLS-P39 |
| AA61NY-B1 | DF | AA61NY | 139 | 0.508 | 0.623 | 2.86% | 2 | 5 | 0.8924 | 500, 233, 108, 50.3, 23.4, 10.9, 5.1, 2.4 | 2.15 | YES | | ppt in 2X C1-C4 | SLS-P55 |
| AA61NY-B2a | DF | AA61NY | 167 | 0.610 | 0.781 | 1.34% | 1 | 6 | 0.8173 | 500, 233, 108, 50.3, 23.4, 10.9, 5.1, 2.4 | 2.15 | YES | | chem. pieces C1-C4 in 96-well plate; ppt in 2X C1-C2; C1 toxicity < C2; curve rises; SD originally failed test; good toxicity curve when C1 removed by SD | SLS-P56 |
| AA61NY-B3 | DF | AA61NY | NA | NA | 0.533 | 0.92% | 0 | 8 | NA | 300, 204, 139, 94, 64, 44, 30, 20 | 1.47 | NO | no points between 0-50% | no PRISM file generated; globules of chemical in 1X C1-C6; ppt in 2X C1-C4 | SLS-P57 |
| AA61NY-B4a | DF | AA61NY | 113 | 0.413 | 0.128 | 6.62% | 1 | 6 | 0.7376 | 300, 204, 139, 94, 64, 44, 30, 20 | 1.47 | YES | | chem. globules in all conc. in test plate; ppt in 2X C1-C5;C1 toxicity< C2 and C3; curve rises; SD originally failed test; good tox. curve when C1 and C2 removed by SD | SLS-P58 |
| ***FRAME*** | | | | | | | | | | | | | | | |
| FAL.NHK.LC.A1.28.07.04 | RF | AA61LC | NA | NA | 0.052 | 15.74% | 1 | 2 | -0.3837 | 1000, 100, 10, 1, 0.1, 0.01, 0.001, 0.0001 | 10 | RF | range finder; % VC difference > 15 | | FAL.NHK.SLS.28.07.04 |
| FAL.NHK.LC.B1.11.08.04 | DF | AA61LC | 828 | 3.017 | 0.764 | 7.18% | 1 | 5 | 0.7436 | 1000, 465, 216, 101, 46.8, 21.8, 10.1, 4.71 | 2.15 | YES | | ppt in C3 | FAL.NHK.SLS.11.08.04 |
| FAL.NHK.LC.B2.17.09.04 | DF | AA61LC | 1670 | 6.104 | 0.685 | 4.15% | 0 | 7 | 0.8707 | 2500, 1163, 541, 252, 117, 54.4, 25.3, 11.8 | 2.15 | NO | no points between 0 - 50% | ppt in C1-C4;outliers removed | FAL.NHK.SLS.17.09.04 |
| FAL.NHK.LC.B3.08.10.04 | DF | AA61LC | 586 | 2.136 | 0.681 | 9.54% | 2 | 6 | 0.8830 | 2500, 1163, 541, 252, 117, 54.4, 25.3, 11.8 | 2.15 | YES | | ppt in 2X C1-C4; 1X C1 | FAL.NHK.SLS.08.10.03 |
| FAL.NHK.LC.B4.20.10 .04 | DF | AA61LC | 1010 | 3.678 | 1.071 | 13.87% | 2 | 6 | 0.9319 | 2500, 1163, 541, 252, 117, 54.4, 25.3, 11.8 | 2.15 | YES | | ppt in 2X C1; ppt in 1X C1-C8 | FAL.NHK.SLS.20.10.04 |

## ENDOSULFAN

| | | | | | | | | | | | | | | | |
|---|---|---|---|---|---|---|---|---|---|---|---|---|---|---|---|
| ***IIVS*** | | | | | | | | | | | | | | | |
| A1 | RF | AA61HZ | 0.817 | 0.002 | 0.637 | 37.84% | 2 | 3 | 0.9532 | 100, 10, 1, 0.1, 0.01, 0.001, 0.0001, 0.00001 | 10 | RF | range finder; %VC difference >0 | volatility problem; VC1 OD values much lower than VC2; VC1 removed from subsequent analysis by SD | SLS-A2-N040320B |
| B1 | DF | AA61HZ | 2.66 | 0.007 | 0.690 | 3.49% | 1 | 3 | 0.9857 | 50.0, 27.8, 15.4, 8.57, 4.76, 2.65, 1.47, 0.817 | 1.8 | YES | | ppt in 2X C2 | SLS-B1-N040423A |
| B2 | DF | AA61HZ | 2.10 | 0.005 | 0.674 | 1.76% | 3 | 2 | 0.9910 | 50.0, 27.8, 15.4, 8.57, 4.76, 2.65, 1.47, 0.817 | 1.8 | YES | | ppt in 2X C2; ppt in 1X C1 | SLS-B2-N040424A |
| B3 | DF | AA61HZ | 1.80 | 0.004 | 0.554 | 0.89% | 3 | 2 | 0.9590 | 20.0, 12.5, 7.81, 4.88, 3.05, 1.91, 1.19, 0.745 | 1.6 | YES | | | SLS-B3-N040506A |
| ***ECBC*** | | | | | | | | | | | | | | | |
| AA61LG-A1 | RF | AA61LG | NA | NA | 0.612 | 31.27% | 2 | 1 | NA | 100, 10, 1, 0.1, 0.01, 0.001, 0.0001, 0.00001 | 10 | RF | range finder; % VC difference > 15 | ppt in 2X C1 and C1 | SLS-P39 |
| AA61LG-B1(sealer) | DF | AA61LG | 4.46 | 0.011 | 0.935 | 2.18% | 0 | 5 | 0.8732 | 10.0, 4.65, 2.16, 1.01, 0.47, 0.22, 0.10, 0.05 | 2.15 | NO | no points between 0 - 50% | | SLS-P46 |
| AA61LG-B2 (sealer) | DF | AA61LG | 4.09 | 0.010 | 1.218 | 0.21% | 2 | 6 | 0.9121 | 9.00, 6.12, 4.17, 2.83, 1.93, 1.31, 0.892, 0.607 | 1.47 | YES | | | SLS-P51 |

# NHK NRU Reference Substance Data

| Experiment ID NHK Cells | Assay Type[1] | Substance ID | $IC_{50}$ (ug/mL) | $IC_{50}$ (mM) | Mean VC OD[2] | Difference of right/left VC from mean VC[3] | Number of Points 0 - 50 %[4] | Number of Points 50 - 100 %[5] | $R^2$ [6] | Exposure Concentrations (ug/mL)[7] | Dilution Factor[8] | Acceptable Tests[9] | Rationale for Unacceptability | Notes | PC ID |
|---|---|---|---|---|---|---|---|---|---|---|---|---|---|---|---|
| AA61LG-B3 (sealer) | DF | AA61LG | 3.00 | 0.007 | 0.613 | 0.94% | 3 | 5 | 0.9278 | 9.00, 6.12, 4.17, 2.83, 1.93, 1.31, 0.892, 0.607 | 1.47 | YES | | | SLS-P52 |
| AA61LG-B4 (sealer) | DF | AA61LG | 3.24 | 0.008 | 0.631 | 4.02% | 3 | 4 | 0.9089 | 9.00, 6.12, 4.17, 2.83, 1.93, 1.31, 0.892, 0.607 | 1.47 | YES | | | SLS-P54 |
| ***FRAME*** | | | | | | | | | | | | | | | |
| FAL.NHK.PW.A1.28.04.04 | RF | AA61PW | 1.79 | 0.004 | 0.592 | 24.69% | 1 | 2 | 0.4155 | 10, 1, 0.1, 0.01, 0.001, 0.0001, 0.00001, 0.000001 | 10 | RF | range finder; %VC difference > 15 | possible volatility problem | FAL.NHK.SLS.28.04.03 |
| FAL.NHK.PW.B1.11.06.04 | DF | AA61PW | 1.05 | 0.003 | 0.953 | 2.52% | 5 | 1 | 0.6822 | 10, 6.80, 4.63, 3.15, 2.14, 1.46, 0.99, 0.67 | 1.47 | NO | PC failed | incorrect solvent listed; biphasic response | FAL.NHK.SLS.11.06.04 |
| FAL.NHK.PW.B2.25.06.04 | DF | AA61PW | 2.19 | 0.005 | 1.109 | 6.72% | 5 | 3 | 0.9113 | 10, 6.80, 4.63, 3.15, 2.14, 1.46, 0.99, 0.67 | 1.47 | YES | | | FAL.NHK.SLS.25.06.04 |
| FAL.NHK.PW.B3.17.09.04 | DF | AA61PW | 1.24 | 0.003 | 0.820 | 0.67% | 5 | 2 | 0.8280 | 10, 6.80, 4.63, 3.15, 2.14, 1.46, 0.99, 0.67 | 1.47 | YES | | outlier removed by SD | FAL.NHK.SLS.17.09.04 |
| FAL.NHK.PW.B4.07.10.04 | DF | AA61PW | 0.822 | 0.002 | 0.731 | 4.68% | 7 | 1 | 0.7929 | 10, 6.80, 4.63, 3.15, 2.14, 1.46, 0.99, 0.67 | 1.47 | YES | | | FAL.NHK.SLS.07.10.03 |

## EPINEPHRINE BITARTRATE

| | | | | | | | | | | | | | | | |
|---|---|---|---|---|---|---|---|---|---|---|---|---|---|---|---|
| ***IIVS*** | | | | | | | | | | | | | | | |
| A1 | RF | AA61LT | 91.2 | 0.274 | 0.637 | 6.28% | 2 | 1 | 0.9359 | 1000, 100, 10, 1, 0.1, 0.01, 0.001, 0.0001 | 10 | RF | range finder | | SLS-A2-N040320B |
| B1 | DF | AA61LT | 61.1 | 0.183 | 0.430 | 3.51% | 5 | 3 | 0.9623 | 1000, 556, 309, 171, 95.3, 52.9, 29.4, 16.3 | 1.8 | YES | | ppt in 1X C1 | SLS-B1-N040423A |
| B2 | DF | AA61LT | 83.8 | 0.251 | 0.562 | 3.01% | 2 | 3 | 0.9796 | 1000, 556, 309, 171, 95.3, 52.9, 29.4, 16.3 | 1.8 | YES | | ppt in 1X C1-C2 | SLS-B2-N040424A |
| B3 | DF | AA61LT | 80.0 | 0.240 | 0.513 | 2.26% | 2 | 5 | 0.9398 | 200, 143, 102, 72.9, 52.1, 37.2, 26.6, 19.0 | 1.4 | YES | | | SLS-B3-N040506A |
| ***ECBC*** | | | | | | | | | | | | | | | |
| AA61HW-A1 | RF | AA61HW | 73.5 | 0.220 | 0.337 | 4.12% | 2 | 0 | 0.6969 | 10000, 1000, 100, 10, 1, 0.1, 0.01, 0.001 | 10 | RF | range finder | ppt in 2X C1 | SLS-P6 |
| AA61HW-B1 | DF | AA61HW | 124 | 0.371 | 0.897 | 6.82% | 2 | 2 | 0.8018 | 200, 136, 92.6, 63.0, 42.8, 29.1, 19.8, 13.5 | 1.47 | YES | | | SLS-P26 |
| AA61HW-B2 | DF | AA61HW | 118 | 0.354 | 0.959 | 3.84% | 3 | 3 | 0.9373 | 200, 165, 137, 113, 93.3, 77.1, 63.7, 52.7 | 1.21 | YES | | | SLS-P29 |
| AA61HW-B3 | DF | AA61HW | 103 | 0.308 | 0.692 | 0.84% | 4 | 2 | 0.9411 | 200, 165, 137, 113, 93.3, 77.1, 63.7, 52.7 | 1.21 | YES | | | SLS-P31 |
| ***FRAME*** | | | | | | | | | | | | | | | |
| FAL.NHK.RK.A1.26.03.04 | RF | AA61RK | 93.5 | 0.281 | 0.552 | 10.97% | 3 | 0 | 0.7362 | 10000, 1000, 100, 10, 1, 0.1, 0.01, 0.001 | 10 | RF | range finder | pts between 50 - 100% but several above 100% ; ppt in C1 | FAL.NHK.SLS.26.03.04 |
| FAL.NHK.RK.B1.25.04.04 | DF | AA61RK | 112 | 0.337 | 0.705 | 1.25% | 3 | 1 | 0.8428 | 1000, 465, 216, 101, 46.8, 21.8, 10.1, 4.71 | 2.15 | YES | | two "outliers" in C4 removed b SD due to low OD | FAL.NHK.SLS.25.04.04 |
| FAL.NHK.RK.B2.28.04.04 | DF | AA61RK | 77.3 | 0.232 | 0.887 | 5.93% | 4 | 1 | 0.9755 | 1000, 465, 216, 101, 46.8, 21.8, 10.1, 4.7, | 2.15 | YES | | two "outliers" in C4 removed by SD; no NR uptake | FAL.NHK.SLS.28.04.03 |
| FAL.NHK.RK.B3.13.05.04 | DF | AA61RK | 55.8 | 0.168 | 0.606 | 0.81% | 4 | 3 | 0.9907 | 1000, 465, 216, 101, 46.8, 21.8, 10.1, 4.71 | 2.15 | YES | | | FAL.NHK.SLS.13.05.04 |

## ETHANOL

| | | | | | | | | | | | | | | | |
|---|---|---|---|---|---|---|---|---|---|---|---|---|---|---|---|
| ***IIVS*** | | | | | | | | | | | | | | | |
| A1 | RF | AA61FH | NA | NA | 0.628 | 2.73% | 0 | 1 | 0.4299 | 10000, 1000, 100, 10, 1, 0.1, 0.01, 0.001 | 10 | RF | range finder; no points between 0 - 50% | | SLS-A2-N040320B |
| B1 | DF | AA61FH | 7240 | 157.247 | 0.461 | 100.30% | 3 | 2 | 0.9851 | 150000, 83333, 46296, 25720, 14289, 7938, 4410, 2450 | 1.8 | NO | %VC difference >15 | Left VC was removed from calculations due to volatility | SLS-B8-N040819A |
| B2 | DF | AA61FH | 6430 | 139.502 | 0.509 | 100.04% | 2 | 2 | 0.9844 | 150000, 83333, 46296, 25720, 14289, 7938, 4410, 2450 | 1.8 | NO | %VC difference >15 | Left VC was removed from calculations due to volatility | SLS-B9-N040820A |

# NHK NRU Reference Substance Data

| Experiment ID NHK Cells | Assay Type[1] | Substance ID | $IC_{50}$ (ug/mL) | $IC_{50}$ (mM) | Mean VC OD[2] | Difference of right/left VC from mean VC[3] | Number of Points 0 - 50 %[4] | Number of Points 50 - 100 %[5] | $R^2$ [6] | Exposure Concentrations (ug/mL)[7] | Dilution Factor[8] | Acceptable Tests[9] | Rationale for Unacceptability | Notes | PC ID |
|---|---|---|---|---|---|---|---|---|---|---|---|---|---|---|---|
| B3 | DF | AA61FH | 10800 | 234.197 | 0.586 | 1.92% | 2 | 3 | 0.9760 | 150000, 83333, 46296, 25720, 14289, 7938, 4410, 2450 | 1.8 | YES | | | SLS-B11-N040904H |
| B4 | DF | AA61FH | 9250 | 200.716 | 0.709 | 2.59% | 1 | 3 | 0.9781 | 150000, 83333, 46296, 25720, 14289, 7938, 4410, 2450 | 1.8 | YES | | | SLS-B10-N040903A |
| B5 | DF | AA61FH | 10700 | 232.050 | 0.627 | 1.78% | 3 | 4 | 0.9858 | 50000, 31250, 19531, 12207, 7629, 4768, 2980, 1863 | 1.6 | YES | | | SLS-B12-N041022B |
| ***ECBC*** | | | | | | | | | | | | | | | |
| AA61JU-A1 | RF | AA61JU | NA | NA | 0.436 | 7.58% | 0 | 1 | NA | 10000, 1000, 100, 10, 1, 0.1, 0.01, 0.001 | 10 | RF | range finder | | SLS-P5 |
| AA61JU-B1(sealer) | DF | AA61JU | 7940 | 172.418 | 0.701 | 3.02% | 6 | 1 | 0.9000 | 100000, 68027, 46277, 31481, 21416, 14568, 9911, 6742 | 1.47 | YES | | | SLS-P28 |
| AA61JU-B2(sealer) | DF | AA61JU | 8710 | 189.052 | 0.741 | 5.60% | 5 | 3 | 0.9616 | 50000, 34014, 23139, 15740, 10708, 7284, 4955, 3371 | 1.47 | YES | | | SLS-P31 |
| AA61JU-B3(sealer) | DF | AA61JU | 8220 | 178.477 | 0.788 | 1.41% | 3 | 4 | 0.9617 | 30000, 20408, 13883, 9444, 6425, 4371, 2973, 2023 | 1.47 | YES | | | SLS-P34 |
| ***FRAME*** | | | | | | | | | | | | | | | |
| FAL.NHK.PC.A1.25.04.04 | RF | AA61PC | 11800 | 256.792 | 0.646 | 14.49% | 0 | 1 | -0.7906 | 100000, 1000, 100,10, 1, 0.1, 0.01, 0.001 | 10 | RF | range finder | | FAL.NHK.SLS.25.04.04 |
| FAL.NHK.PC.A2.28.04.04 | DF | AA61PC | 9640 | 209.210 | 0.959 | 3.42% | 2 | 6 | 0.9428 | 25000, 11628, 5408, 2516, 1170, 544, 253, 118 | 2.15 | YES | | | FAL.NHK.SLS.28.04.03 |
| FAL.NHK.PC.B2.11.06.04 | DF | AA61PC | 11400 | 247.504 | 0.753 | 2.64% | 1 | 3 | 0.8972 | 25000, 11628, 5408, 2516, 1170, 544, 253, 118 | 2.15 | NO | PC failed | incorrect solvent listed | FAL.NHK.SLS.11.06.04 |
| FAL.NHK.PC.B3.23.06.04 | DF | AA61PC | 14200 | 308.022 | 0.896 | 9.81% | 1 | 4 | 0.8958 | 25000, 11628, 5408, 2516, 1170, 544, 253, 118 | 2.15 | YES | | | FAL.NHK.SLS.23.06.04 |
| FAL.NHK.PC.B4.25.06.04 | DF | AA61PC | 12200 | 265.816 | 0.899 | 4.29% | 1 | 3 | 0.8875 | 25000, 11628, 5408, 2516, 1170, 544, 253, 118 | 2.15 | YES | | | FAL.NHK.SLS.25.06.04 |

## ETHYLENE GLYCOL

| | | | | | | | | | | | | | | | |
|---|---|---|---|---|---|---|---|---|---|---|---|---|---|---|---|
| ***IIVS*** | | | | | | | | | | | | | | | |
| Preliminary | RF | AA61HR | 44900 | 723.027 | 0.588 | 4.11% | 0 | 1 | 0.6185 | 10000, 1000, 100, 10, 1, 0.1, 0.01, 0.001 | 10 | RF | range finder | | Preliminary |
| B1 | DF | AA61HR | 40900 | 658.615 | 0.552 | 1.95% | 1 | 2 | 0.9752 | 100000, 56250, 31600, 17800, 10000, 5600, 3160, 1770 | 1.78 | YES | | | SLS-B1 |
| B2 | DF | AA61HR | 32200 | 518.519 | 0.734 | 3.50% | 1 | 3 | 0.9755 | 100000, 56250, 31600, 17800, 10000, 5600, 3160, 1770 | 1.78 | YES | | | SLS-B2 |
| B3 | DF | AA61HR | 43200 | 695.652 | 0.798 | 1.30% | 1 | 1 | 0.9797 | 100000, 56250, 31600, 17800, 10000, 5600, 3160, 1770 | 1.78 | YES | | | SLS-B3 |
| B4 | DF | AA61HR | 43700 | 703.704 | 0.826 | 4.36% | 1 | 1 | 0.9780 | 100000, 56250, 31600, 17800, 10000, 5600, 3160, 1770 | 1.78 | YES | | | SLS-B4 |
| ***ECBC*** | | | | | | | | | | | | | | | |
| ECBC-NHK-Ib-01 AA61LM-A1 | RF | AA61LM | NA | NA | 0.788 | 1.16% | 0 | 0 | -0.5039 | 10000, 1000, 100, 10, 1, 0.1, 0.01, 0.001 | 10 | RF | range finder | | SLS-P2 |
| ECBC-NHK-Ib-02 AA61LM-A2 | RF | AA61LM | 17700 | 285.024 | 1.125 | 7.69% | 0 | 1 | 0.9617 | 100000, 10000, 1000, 100, 10, 1, 0.1, 0.01 | 10 | NO | No points between 10 and 50% | | SLS-P3 |
| ECBC-NHK-Ib-03 AA61LM-B1 | DF | AA61LM | 42100 | 677.939 | 1.282 | 1.23% | 2 | 2 | 0.9764 | 100000, 68000, 46300, 31500, 21400, 14600, 9910, 6740 | 1.47 | YES | | | SLS-P4 |

# NHK NRU Reference Substance Data

| Experiment ID NHK Cells | Assay Type[1] | Substance ID | $IC_{50}$ (ug/mL) | $IC_{50}$ (mM) | Mean VC OD[2] | Difference of right/left VC from mean VC[3] | Number of Points 0 - 50 %[4] | Number of Points 50 - 100 %[5] | $R^2$ [6] | Exposure Concentrations (ug/mL)[7] | Dilution Factor[8] | Acceptable Tests[9] | Rationale for Unacceptability | Notes | PC ID |
|---|---|---|---|---|---|---|---|---|---|---|---|---|---|---|---|
| ECBC-NHK-Ib-04 AA61LM-B2 (correction rec'd 4/30/03) | DF | AA61LM | 39000 | 628.019 | 1.148 | 5.83% | 1 | 2 | 0.9491 | 84869.6, 57656.0, 39168.5, 26609.0, 18076.8, 12280.4, 8342.7, 5667.6 | 1.47 | YES | | | SLS-P5 |
| ECBC-NHK-Ib-05 AA61LM-B3 | DF | AA61LM | 44000 | 708.535 | 1.119 | 0.98% | 0 | 2 | 0.9719 | 100000, 68000, 46300, 31500, 21400, 14600, 9910, 6740 | 1.47 | NO | No points between 10 and 50% | | SLS-P7 |
| ECBC-NHK-Ib-06 AA61LM-B4 | DF | AA61LM | 32900 | 529.791 | 0.910 | 3.05% | 3 | 3 | 0.9383 | 60030, 46200, 35500, 27300, 21000, 16200, 12400, 9570 | 1.3 | YES | | | SLS-P8 |
| ***FRAME*** | | | | | | | | | | | | | | | |
| A3 1b/NHK/DF1/FAL/PD | DF | AA61PD | 16.1 | 0.259 | 0.047 | 1.95% | 5 | 1 | 0.3772 | 100, 68.02, 46.27, 31.47, 21.40, 14.50, 9.90, 6.70 | 1.47 | RF | $R^2$ < 0.8; PC failed; range finder | NR crystal problems; used medium not normally used | A3 1b/NHK/CTR4/FAL/ |
| A4 1b/NHK/DF2/FAL/PD | DF | AA61PD | 4.17 | 0.067 | 0.125 | 25.74% | 4 | 1 | 0.1465 | 100, 68.02, 46.27, 31.47, 21.41, 14.56, 9.90, 6.74 | 1.47 | NO | VC difference > 15%; $R^2$ < 0.8 | NR crystal problems; used medium not normally used | A4 1b/NHK/CTR5/FAL |
| A5 1b/NHK/DF3/FAL/PD | DF | AA61PD | NA | NA | 0.140 | 1.78% | 6 | 1 | NA | 100, 68.02, 46.27, 31.47, 21.41, 14.56, 9.90, 6.74 | 1.47 | NO | No $R^2$ or ICx; PC failed | Used different medium; OD values of test wells slightly higher than bkgd. ODs; negative values for VC | A5 1b/NHK/CTR6/FAL |
| A6 1b/NHK/DF4/FAL/PD | DF | AA61PD | 67.1 | 1.081 | 0.920 | 0.29% | 1 | 0 | 0.5955 | 100, 68.02, 46.27, 31.47, 21.40, 14.50, 9.90, 6.70 | 1.47 | NO | No point between 50 & 90%; $R^2$ < 0.8 | recalc w/o outlier didn't improve fit, so outlier was not removed | A6 1b/NHK/CTR7/FAL |
| A10 1b/NHK/DF5/FAL/PD | DF | AA61PD | 48400 | 779.388 | 1.203 | 10.37% | 1 | 6 | 0.8164 | 100000, 68027, 46277, 31481, 21416, 14568, 9911, 6742 | 1.47 | YES | | no outliers | A10 1b/NHK/CTR11/FAL |
| A11 1b/NHK/DF6/FAL/PD | DF | AA61PD | 54700 | 880.837 | 1.706 | 4.22% | 2 | 2 | 0.8960 | 100000, 68027, 46277, 31481, 21416, 14568, 9911, 6742 | 1.47 | YES | | | A11 1b/NHK/CTR12/FAL |
| A12 1b/NHK/DF7/FAL/PD | DF | AA61PD | 33200 | 534.622 | 0.372 | 17.37% | 1 | 5 | 0.8678 | 100000, 68027, 46277, 31481, 21416, 14568, 9911, 6742 | 1.47 | NO | VC difference > 15% | | A12 1b/NHK/CTR13/FAL/SLS |
| 1b/NHK/DF3/FAL/PD | DF | AA61PD | 46300 | 745.572 | 0.773 | 12.10% | 1 | 5 | 0.9074 | 100000, 68027, 46277, 31481, 21416, 14568, 9911, 6742 | 1.47 | YES | | | 1b/NHK/CTR14/FAL/SLS |

## FENPROPATHRIN

| | | | | | | | | | | | | | | | |
|---|---|---|---|---|---|---|---|---|---|---|---|---|---|---|---|
| ***IIVS*** | | | | | | | | | | | | | | | |
| A1 | RF | AA61HY | 1.38 | 0.004 | 0.552 | 4.86% | 3 | 1 | 0.9698 | 1000, 100, 10, 1, 0.1, 0.01, 0.001, 0.0001 | 10 | RF | range finder | ppt in 2X C1-C2 and 1X C1-C2 | SLS-A1-N040317B |
| B1 | DF | AA61HY | 2.18 | 0.006 | 0.580 | 3.12% | 5 | 3 | 0.9412 | 75.0, 34.1, 15.5, 7.04, 3.20, 1.46, 0.661, 0.301 | 2.2 | YES | | ppt in 2X C1-C3 | SLS-B1-N040423A |
| B2 | DF | AA61HY | 1.67 | 0.005 | 0.600 | 4.40% | 5 | 2 | 0.9440 | 75.0, 34.1, 15.5, 7.04, 3.20, 1.46, 0.661, 0.301 | 2.2 | YES | | ppt in 2X C1-C3 | SLS-B2-N040424A |
| B3 | DF | AA61HY | 1.62 | 0.005 | 0.528 | 1.77% | 5 | 2 | 0.9228 | 75.0, 34.1, 15.5, 7.04, 3.20, 1.46, 0.661, 0.301 | 2.2 | YES | | ppt in 2X C1-C3; ppt in 1X C1 | SLS-B3-N040506A |
| ***ECBC*** | | | | | | | | | | | | | | | |
| AA61LJ-A1 | RF | AA61LJ | 4.46 | 0.013 | 0.569 | 6.52% | 3 | 3 | 0.9479 | 1000, 100, 10, 1, 0.1, 0.01, 0.001, 0.0001 | 10 | RF | range finder | ppt in 2X C1-C2 and 1X C1 | SLS-P2 |
| AA61LJ-B1 | DF | AA61LJ | 3.71 | 0.0106 | 1.025 | 3.17% | 8 | 0 | 0.8224 | 100, 68.0, 46.3, 31.5, 21.4, 14.6, 9.91, 6.74 | 1.47 | NO | no points between 50 - 100% | ppt in 2X C1-C5 and 1X C1 | SLS-P8 |
| AA61LJ-B2 | DF | AA61LJ | 2.94 | 0.008 | 1.265 | 0.48% | 5 | 3 | 0.9897 | 100, 46.5, 21.6, 10.1, 4.68, 2.18, 1.01, 0.47 | 2.15 | YES | | ppt in 2X C1-C3 | SLS-P10 |
| AA61LJ-B3 | DF | AA61LJ | 3.38 | 0.010 | 0.779 | 5.84% | 5 | 3 | 0.9503 | 100, 46.5, 21.6, 10.1, 4.68, 2.18, 1.01, 0.47 | 2.15 | YES | | ppt in 2X C1-C3 and 1X C1 | SLS-P11 |
| AA61LJ-B4 | DF | AA61LJ | 4.87 | 0.014 | 0.991 | 1.87% | 5 | 3 | 0.9448 | 100, 46.5, 21.6, 10.1, 4.68, 2.18, 1.01, 0.47 | 2.15 | YES | | ppt in 2X C1-C3 and 1X C1 | SLS-P23 |
| ***FRAME*** | | | | | | | | | | | | | | | |
| FAL.NHK.A1.11/02/04 | RF | AA61PT | 5.51 | 0.016 | 1.226 | 1.06% | 3 | 5 | 0.9610 | 1000, 100, 10, 1, 0.1, 0.01, 0.001, 0.0001 | 10 | RF | range finder | C5 outliers removed by SD; ppt in 2X C1 and 1X C1-C2 | FAL.NHK.SLS.11.02.04 |

# NHK NRU Reference Substance Data

| Experiment ID NHK Cells | Assay Type[1] | Substance ID | $IC_{50}$ (ug/mL) | $IC_{50}$ (mM) | Mean VC OD[2] | Difference of right/left VC from mean VC[3] | Number of Points 0 - 50 %[4] | Number of Points 50 - 100 %[5] | $R^2$ [6] | Exposure Concentrations (ug/mL)[7] | Dilution Factor[8] | Acceptable Tests[9] | Rationale for Unacceptability | Notes | PC ID |
|---|---|---|---|---|---|---|---|---|---|---|---|---|---|---|---|
| FAL.NHK.PT.B1.26.02.04 | DF | AA61PT | 0.012 | 0.000 | 0.185 | 9.24% | 8 | 0 | 0.4977 | 2500, 1163, 541, 252, 117, 54.4, 25.3, 11.8 | 2.15 | NO | no points between 50-100% | ppt in 2X C1-C5 and 1X C1-C4 | FAL.NHK.SLS/MO.26.02.03 |
| FAL.NHK.PT.18.03.04 (B2 not in identifier) | DF | AA61PT | 2.77 | 0.008 | 0.321 | 1.46% | 4 | 1 | 0.7108 | 50.0, 23.3, 10.8, 5.03, 2.34, 1.09, 0.51, 0.24 | 2.15 | YES | | ppt in 2X C1 and 1X C1 | FAL.NHK.SLS.18.03.03 |
| FAL.NHK.PT.B3.19.03.04 | DF | AA61PT | 2.37 | 0.007 | 0.587 | 8.52% | 5 | 2 | 0.9693 | 50.0, 23.3, 10.8, 5.03, 2.34, 1.09, 0.51, 0.24 | 2.15 | YES | | ppt in 2X C1 | FAL.NHK.SLS.19.03.03 |
| FAL.NHK.PT.B4.25.03.04 | DF | AA61PT | 1.56 | 0.004 | 0.693 | 8.69% | 6 | 2 | 0.9644 | 100, 46.5, 21.6, 10.1, 4.68, 2.18, 1.01, 0.47 | 2.15 | YES | | ppt in 2X C1 and 1X C1-C4 | FAL.NHK.SLS.25.03.03 |
| **GIBBERELLIC ACID** | | | | | | | | | | | | | | | |
| ***IIVS*** | | | | | | | | | | | | | | | |
| A1 | RF | AA61RE | NA | NA | 0.542 | 1.18% | 0 | 1 | 0.0000 | 1000, 100, 10, 1, 0.1, 0.01, 0.001, 0.0001 | 10 | RF | range finder; no points between 0 - 50% | outlier in C7 removed by SD | SLS-A4-N040331N |
| B1 | DF | AA61RE | 2820 | 8.155 | 0.594 | 4.88% | 1 | 4 | 0.9686 | 3750, 2344, 1465, 916, 572, 358, 224, 140 | 1.6 | YES | | | SLS-B12-N041022B |
| B2 | DF | AA61RE | 2920 | 8.442 | 0.499 | 1.94% | 1 | 2 | 0.9503 | 3750, 2679, 1913, 1367, 976, 697, 498, 356 | 1.4 | YES | | | SLS-B113-N041029B |
| B3 | DF | AA61RE | 2680 | 7.735 | 0.646 | 1.50% | 1 | 5 | 0.9492 | 3750, 2679, 1913, 1367, 976, 697, 498, 356 | 1.4 | YES | | | SLS-B14-N041030A |
| ***ECBC*** | | | | | | | | | | | | | | | |
| AA61FR-A1 | RF | AA61FR | NA | NA | 0.958 | 1.55% | 0 | 6 | NA | 2500, 250, 25, 2.5, 0.25, 0.025, 0.0025, 0.00025 | 10 | RF | range finder | | SLS-P22 |
| AA61FR-B1 | DF | AA61FR | 2470 | 7.136 | 0.689 | 0.27% | 4 | 4 | 0.9209 | 10000, 6803, 4628, 3148, 2142, 1457, 991, 674 | 1.47 | YES | | ppt in 2X C1-C4 and 1X C1 | SLS-P49 |
| AA61FR-B2 | DF | AA61FR | 3270 | 9.429 | 1.151 | 0.64% | 3 | 5 | 0.9334 | 10000, 6803, 4628, 3148, 2142, 1457, 991, 674 | 1.47 | YES | | ppt in 2X C1-C5 | SLS-P50 |
| AA61FR-B3 | DF | AA61FR | 2810 | 8.118 | 0.643 | 1.28% | 4 | 4 | 0.9736 | 10000, 6803, 4628, 3148, 2142, 1457, 991, 674 | 1.47 | YES | | ppt in 2X C1-C3 and 1X C1 | SLS-P53 |
| ***FRAME*** | | | | | | | | | | | | | | | |
| FAL.NHK.GY.***A1.28.07.04 (should be 11.08.04)*** | RF | AA61GY | NA | NA | 0.596 | 2.46% | 0 | 1 | NA | 1000, 100, 10, 1, 0.1, 0.01, 0.001, 0.0001 | 10 | RF | range finder | | FAL.NHK.SLS.11.08.04 |
| FAL.NHK.GY.B1.08.10.04 | DF | AA61GY | 3030 | 8.739 | 0.629 | 2.48% | 1 | 7 | 0.8918 | 5000, 2326, 1082, 503, 234, 109, 50.6, 23.6 | 2.15 | YES | | | FAL.NHK.SLS.08.10.03 |
| FAL.NHK.GY.B2.20.10 .04 | DF | AA61GY | 3160 | 9.130 | 1.110 | 2.21% | 1 | 2 | 0.9820 | 5000, 2326, 1082, 503, 234, 109, 50.6, 23.6 | 2.15 | YES | | | FAL.NHK.SLS.20.10.04 |
| FAL.NHK.GY.B3 .22.10.04 | DF | AA61GY | 2630 | 7.594 | 0.641 | 8.86% | 1 | 1 | 0.8601 | 5000, 2326, 1082, 503, 234, 109, 50.6, 23.6 | 2.15 | YES | | | FAL.NHK.SLS.22.10.04 (MO) |
| **GLUTETHIMIDE** | | | | | | | | | | | | | | | |
| ***IIVS*** | | | | | | | | | | | | | | | |
| A1 | RF | AA61NN | 119 | 0.546 | 0.579 | 1.28% | 0 | 1 | 0.9782 | 1000, 100, 10, 1, 0.1, 0.01, 0.001, 0.0001 | 10 | RF | range finder; no points between 0 - 50% | ppt in 2X C1 | SLS-A5-N040401A |
| B1 | DF | AA61NN | 190 | 0.873 | 0.634 | 3.05% | 4 | 3 | 0.9710 | 1000, 556, 309, 171, 95.3, 52.9, 29.4, 16.3 | 1.8 | YES | | ppt in 2X C1-C3 | SLS-B4-N040513C |
| B2 | DF | AA61NN | 193 | 0.889 | 0.541 | 0.86% | 4 | 2 | 0.9455 | 1000, 556, 309, 171, 95.3, 52.9, 29.4, 16.3 | 1.8 | YES | | ppt in 2X C1-C3 | SLS-B5-N040514B |
| B3 | DF | AA61NN | 144 | 0.664 | 0.806 | 8.24% | 4 | 4 | 0.9734 | 1000, 556, 309, 171, 95.3, 52.9, 29.4, 16.3 | 1.8 | YES | | ppt in 1X C1 and 2X C1 | SLS-B6-N040716A |
| ***ECBC*** | | | | | | | | | | | | | | | |
| AA61FE-A1 | RF | AA61FE | 171 | 0.789 | 0.574 | 1.65% | 1 | 6 | 0.9668 | 1000, 100, 10, 1, 0.1, 0.01, 0.001, 0.0001 | 10 | RF | range finder | | SLS-P25 |
| AA61FE-B1 | DF | AA61FE | 114 | 0.524 | 0.799 | 6.19% | 3 | 5 | 0.9192 | 1000, 465, 216, 101, 46.8, 21.8, 10.1, 4.7 | 2.15 | YES | | | SLS-P40 |
| AA61FE-B2 | DF | AA61FE | 236 | 1.086 | 0.688 | 1.79% | 2 | 1 | 0.9489 | 1000, 465, 216, 101, 46.8, 21.8, 10.1, 4.7 | 2.15 | YES | | | SLS-P43 |

# NHK NRU Reference Substance Data

| Experiment ID NHK Cells | Assay Type[1] | Substance ID | $IC_{50}$ (ug/mL) | $IC_{50}$ (mM) | Mean VC OD[2] | Difference of right/left VC from mean VC[3] | Number of Points 0 - 50 %[4] | Number of Points 50 - 100 %[5] | $R^2$ [6] | Exposure Concentrations (ug/mL)[7] | Dilution Factor[8] | Acceptable Tests[9] | Rationale for Unacceptability | Notes | PC ID |
|---|---|---|---|---|---|---|---|---|---|---|---|---|---|---|---|
| AA61FE-B3 | DF | AA61FE | 210 | 0.966 | 1.015 | 6.51% | 3 | 4 | 0.9724 | 1000, 465, 216, 101, 46.8, 21.8, 10.1, 4.7 | 2.15 | YES | | | SLS-P45 |
| ***FRAME*** | | | | | | | | | | | | | | | |
| FAL.NHK.KY.A1.24.09.04 | RF | AA61KY | 200 | 0.922 | 0.492 | 0.10% | 1 | 1 | 0.0402 | 1000, 100, 10, 1.0, 0.1, 0.01, 0.001, 0.0001 | 10 | RF | range finder | | FAL.NHK.SLS.24.09.03 |
| FAL.NHK.KY.B1.01.10.04 | DF | AA61KY | 222 | 1.021 | 1.023 | 10.48% | 5 | 3 | 0.8909 | 1000, 680, 463, 315, 214, 146, 99.1, 67.4 | 1.47 | NO | PC failed | | FAL.NHK.SLS.01.10.04 |
| FAL.NHK.KY.B2.07.10.04 | DF | AA61KY | 147 | 0.674 | 0.668 | 1.24% | 6 | 2 | 0.9631 | 1000, 680, 463, 315, 214, 146, 99.1, 67.4 | 1.47 | YES | | | FAL.NHK.SLS.07.10.03 |
| FAL.NHK.KY.B3.05.11.04 | DF | AA61KY | 195 | 0.899 | 0.502 | 0.78% | 3 | 5 | 0.9246 | 1000, 465, 216, 101, 46.8, 21.8, 10.1, 4.71 | 2.15 | YES | | | FAL.NHK.SLS.05.11.04 |
| FAL.NHK.KY.B4.10.11.04 | DF | AA61KY | 167 | 0.771 | 1.009 | 9.60% | 3 | 3 | 0.9317 | 1000, 465, 216, 101, 46.8, 21.8, 10.1, 4.71 | 2.15 | YES | | | FAL.NHK.SLS.10.11.04 |

## GLYCEROL

| | | | | | | | | | | | | | | | |
|---|---|---|---|---|---|---|---|---|---|---|---|---|---|---|---|
| ***IIVS*** | | | | | | | | | | | | | | | |
| A1 | RF | AA61JF | NA | NA | 0.446 | 6.43% | 0 | 2 | NA | 10000, 1000, 100, 10, 1, 0.1, 0.01, 0.001 | 10 | RF | range finder; no points between 0 - 50% | | SLS-A1-N040317B |
| B1 | DF | AA61JF | 27500 | 298.392 | 0.509 | 14.14% | 3 | 3 | 0.9818 | 100000, 71429, 51020, 36443, 26031, 18593, 13281, 9486 | 1.4 | YES | | | SLS-B12-N041022B |
| B2 | DF | AA61JF | 34200 | 371.354 | 0.519 | 9.50% | 3 | 5 | 0.9761 | 101960, 72829, 52020, 37157, 26541, 18958, 13541, 9672 | 1.4 | YES | | 130 ul of 2X doses were applied. Final conc. values adjusted in data sheets by SD; data from wells G3-G10 removed from EXCEL and PRISM analyses (by SD) since they were not dosed | SLS-B113-N041029B |
| B3 | DF | AA61JF | 25400 | 275.923 | 0.627 | 0.03% | 3 | 4 | 0.9671 | 100000, 71429, 51020, 36443, 26031, 18593, 13281, 9486 | 1.4 | YES | | | SLS-B14-N041030A |
| ***ECBC*** | | | | | | | | | | | | | | | |
| AA61HG-A1 | RF | AA61HG | NA | NA | 0.612 | 4.48% | 0 | 7 | NA | 10000, 1000, 100, 10, 1, 0.1, 0.01, 0.001 | 10 | RF | range finder | no toxicity detected | SLS-P1 |
| AA61HG-A2 | RF | AA61HG | 15600 | 168.961 | 0.497 | 3.56% | 1 | 1 | 0.8792 | 100000, 10000, 1000, 100, 10, 1, 0.1, 0.01 | 10 | RF | range finder | | SLS-P3 |
| AA61HG-B1 | DF | AA61HG | 51200 | 555.693 | 1.001 | 1.36% | 1 | 3 | 0.9717 | 100000, 46512, 21633, 10062, 4680, 2177, 1012, 471 | 2.15 | YES | | | SLS-P8 |
| AA61HG-B2 | DF | AA61HG | 30500 | 330.969 | 0.880 | 0.09% | 3 | 5 | 0.9505 | 100000, 68027, 46277, 31481, 21416, 14568, 9911, 6742 | 1.47 | YES | | | SLS-P14 |
| AA61HG-B3 | DF | AA61HG | 21100 | 229.503 | 0.481 | 14.05% | 5 | 2 | 0.9533 | 100000, 68027, 46277, 31481, 21416, 14568, 9911, 6742 | 1.47 | YES | | | SLS-P16 |
| ***FRAME*** | | | | | | | | | | | | | | | |
| FAL.NHK.RA.A1.11/02/04 | RF | AA61RA | NA | NA | 0.662 | 0.55% | 0 | 0 | NA | 10000, 1000, 100, 10, 1, 0.1, 0.01, 0.001 | 10 | RF | range finder | | FAL.NHK.SLS.11.02.04 |
| FAL.NHK.RA.A2.18.02.04 | DF | AA61RA | 57300 | 621.996 | 0.180 | 11.45% | 1 | 3 | 0.2547 | 100000, 68027, 46277, 31481, 21416, 14568, 9911, 6742 | 1.47 | NO | PC failed | this is a definitive test since conc. series is different from A1 range finder | FAL.NHK.SLS.18.02.04 |
| FAL.NHK.RA.B1.26.02.04 | DF | AA61RA | 21800 | 237.021 | 0.205 | 15.32% | 2 | 1 | 0.9389 | 100000, 46512, 21633, 10062, 4680, 2177, 1012, 471 | 2.15 | YES | | | FAL.NHK.SLS/NB.26.02.03 |
| FAL.NHK.RA.B2.18.03.04 | DF | AA61RA | 8470 | 92.000 | 0.438 | 7.92% | 4 | 4 | 0.9629 | 100000, 46512, 21633, 10062, 4680, 2177, 1012, 471 | 2.15 | YES | | | FAL.NHK.SLS.18.03.03 |
| FAL.NHK.RA.B3.19.03.04 | DF | AA61RA | 23800 | 258.100 | 0.407 | 10.70% | 2 | 4 | 0.9425 | 100000, 46512, 21633, 10062, 4680, 2177, 1012, 471 | 2.15 | YES | | | FAL.NHK.SLS.19.03.03 |

# NHK NRU Reference Substance Data

| Experiment ID NHK Cells | Assay Type[1] | Substance ID | $IC_{50}$ (ug/mL) | $IC_{50}$ (mM) | Mean VC OD[2] | Difference of right/left VC from mean VC[3] | Number of Points 0 - 50 %[4] | Number of Points 50 - 100 %[5] | $R^2$ [6] | Exposure Concentrations (ug/mL)[7] | Dilution Factor[8] | Acceptable Tests[9] | Rationale for Unacceptability | Notes | PC ID |
|---|---|---|---|---|---|---|---|---|---|---|---|---|---|---|---|
| **HALOPERIDOL** | | | | | | | | | | | | | | | |
| ***IIVS*** | | | | | | | | | | | | | | | |
| A1 | RF | AA61LW | 2.86 | 0.008 | 0.589 | 2.46% | 2 | 5 | 0.9764 | 100, 10, 1, 0.1, 0.01, 0.001, 0.0001, 0.00001 | 10 | RF | range finder | | SLS-A4-N040331N |
| B1 | DF | AA61LW | 4.51 | 0.012 | 0.585 | 0.93% | 2 | 5 | 0.9715 | 50.0, 22.7, 10.3, 4.70, 2.13, 0.970, 0.441, 0.200 | 2.2 | YES | | | SLS-B4-N040513C |
| B2 | DF | AA61LW | 3.11 | 0.008 | 0.576 | 4.43% | 3 | 4 | 0.9736 | 50.0, 22.7, 10.3, 4.70, 2.13, 0.970, 0.441, 0.200 | 2.2 | YES | | | SLS-B5-N040514B |
| B3 | DF | AA61LW | 2.24 | 0.006 | 0.764 | 4.42% | 3 | 4 | 0.9571 | 50.0, 22.7, 10.3, 4.70, 2.13, 0.970, 0.441, 0.200 | 2.2 | YES | | | SLS-B6-N040716A |
| ***ECBC*** | | | | | | | | | | | | | | | |
| AA61JC-A1 | RF | AA61JC | 4.88 | 0.013 | 0.947 | 6.60% | 2 | 6 | 0.9383 | 100, 10, 1, 0.1, 0.01, 0.001, 0.0001, 0.00001 | 10 | RF | range finder | ppt in 1X C1 | SLS-P19 |
| AA61JC-B1 | DF | AA61JC | 2.70 | 0.007 | 0.700 | 2.99% | 4 | 3 | 0.9630 | 80.0, 37.2, 17.3, 8.05, 3.74, 1.74, 0.81, 0.38 | 2.15 | YES | | | SLS-P41 |
| AA61JC-B2 | DF | AA61JC | 3.66 | 0.010 | 0.687 | 7.99% | 4 | 3 | 0.9516 | 40.0, 18.6, 8.65, 4.03, 1.87, 0.871, 0.405, 0.188 | 2.15 | YES | | | SLS-P42 |
| AA61JC-B3 | DF | AA61JC | 4.72 | 0.013 | 1.060 | 1.49% | 4 | 4 | 0.9411 | 40.0, 18.6, 8.65, 4.03, 1.87, 0.871, 0.405, 0.188 | 2.15 | YES | | | SLS-P44 |
| ***FRAME*** | | | | | | | | | | | | | | | |
| FAL.NHK.PM.A1.11.08.04 | RF | AA61PM | 0.329 | 0.001 | 0.803 | 11.63% | 3 | 3 | 0.8526 | 100, 10, 1, 0.1, 0.01, 0.001, 0.0001, 0.00001 | 10 | RF | range finder | ppt in 1X C1-C2 | FAL.NHK.SLS.11.08.04 |
| FAL.NHK.PM.B1.08.10.04 | DF | AA61PM | 4.52 | 0.012 | 0.680 | 14.55% | 2 | 4 | 0.9665 | 100, 31.8, 10.1, 3.2, 1.02, 0.322, 0.102, 0.0325 | 3.15 | YES | | | FAL.NHK.SLS.08.10.03 |
| FAL.NHK.PM.B2.22.10.04 | DF | AA61PM | 4.99 | 0.013 | 0.743 | 2.20% | 2 | 5 | 0.9658 | 100, 31.8, 10.1, 3.2, 1.02, 0.322, 0.102, 0.0325 | 3.15 | YES | | | FAL.NHK.SLS.22.10.04 (MO) |
| FAL.NHK.PM.B3.29.10.04 | DF | AA61PM | 1.64 | 0.004 | 0.629 | 7.30% | 5 | 3 | 0.9621 | 100, 46.5, 21.6, 10.1, 4.68, 2.18, 1.01,0.47 | 2.15 | YES | | | FAL.NHK.SLS.29.10.04 |
| **HEXACHLOROPHENE** | | | | | | | | | | | | | | | |
| ***IIVS*** | | | | | | | | | | | | | | | |
| A1 | RF | AA61JN | 0.025 | 0.00006 | 0.509 | 3.75% | 2 | 3 | 0.9760 | 1000, 100, 10, 1, 0.1, 0.01, 0.001, 0.0001 | 10 | RF | range finder | Due to high ppt in 2X C1-C2and 1X C1-C2; SD removed these two doses from Hill function analyses and set the bottom to 0 | SLS-A1-N040317B |
| B1 | DF | AA61JN | 0.0223 | 0.00005 | 0.609 | 3.49% | 3 | 3 | 0.9868 | 0.500, 0.227, 0.103, 0.047, 0.021, 0.010, 0.004, 0.002 | 2.2 | YES | | | SLS-B1-N040423A |
| B2 | DF | AA61JN | 0.0186 | 0.00005 | 0.611 | 0.44% | 4 | 1 | 0.9891 | 0.500, 0.227, 0.103, 0.047, 0.021, 0.010, 0.004, 0.002 | 2.2 | YES | | | SLS-B2-N040424A |
| B3 | DF | AA61JN | 0.0227 | 0.00006 | 0.520 | 1.39% | 3 | 2 | 0.9885 | 0.500, 0.227, 0.103, 0.047, 0.021, 0.010, 0.004, 0.002 | 2.2 | YES | | | SLS-B3-N040506A |
| ***ECBC*** | | | | | | | | | | | | | | | |
| AA61ND-A1 | RF | AA61ND | NA | NA | 0.421 | 16.43% | 3 | 0 | NA | 1000, 100, 10, 1, 0.1, 0.01, 0.001, 0.0001 | 10 | RF | range finder | ppt in 2X C1-C2 and 1X C1-C2 | SLS-P4 |
| AA61ND-B1 | DF | AA61ND | 0.0294 | 0.00007 | 0.684 | 6.18% | 5 | 3 | 0.9590 | 0.200, 0.136, 0.093, 0.063, 0.043, 0.029, 0.020, 0.013 | 1.47 | YES | | | SLS-P21 |

# NHK NRU Reference Substance Data

| Experiment ID NHK Cells | Assay Type[1] | Substance ID | $IC_{50}$ (ug/mL) | $IC_{50}$ (mM) | Mean VC OD[2] | Difference of right/left VC from mean VC[3] | Number of Points 0 - 50 %[4] | Number of Points 50 - 100 %[5] | $R^2$ [6] | Exposure Concentrations (ug/mL)[7] | Dilution Factor[8] | Acceptable Tests[9] | Rationale for Unacceptability | Notes | PC ID |
|---|---|---|---|---|---|---|---|---|---|---|---|---|---|---|---|
| AA61ND-B2 | DF | AA61ND | 0.0301 | 0.00007 | 0.891 | 1.12% | 5 | 3 | 0.9862 | 0.200, 0.136, 0.093, 0.063, 0.043, 0.029, 0.020, 0.013 | 1.47 | YES | | | SLS-P23 |
| AA61ND-B3 | DF | AA61ND | 0.0221 | 0.00005 | 0.586 | 1.63% | 2 | 6 | 0.9707 | 0.200, 0.136, 0.093, 0.063, 0.043, 0.029, 0.020, 0.013 | 1.47 | YES | | | SLS-P25 |
| ***FRAME*** | | | | | | | | | | | | | | | |
| FAL.NHK.HB.A2.26.02.03 | RF | AA61HB | NA | NA | 0.249 | 7.29% | NA | NA | 0.0000 | NA | NA | RF | range finder | SD says ppt binds or reacts with NR;gives "nonsense" data; tox. curve goes wrong direction; ppt in 1X C1-C3 | FAL.NHK.SLS/MO.26.02.03 |
| FAL.NHK.HB.B1.18.03.04 | DF | AA61HB | NA | NA | 0.654 | 5.98% | 0 | 0 | -1.2210 | 0.010, 0.003, 0.001, 0.00032, 0.00010, 0.0000322, 0.0000102, 0.0000032 | 3.15 | NO | no points between 0-100% | SD notes incorrect range used; considers 100 ug/ml as start conc. w/ dil. factor 2.15 | FAL.NHK.SLS.18.03.03 |
| FAL.NHK.HB.B2.19.03.04 | DF | AA61HB | NA | NA | 0.523 | 6.30% | 0 | 0 | -1.2210 | 0.010, 0.003, 0.001, 0.00032, 0.00010, 0.0000322, 0.0000102, 0.0000032 | 3.15 | NO | no points between 0-100% | SD notes incorrect range used; considers 100 ug/ml as start conc. w/ dil. factor 2.15 | FAL.NHK.SLS.19.03.03 |
| FAL.NHK.HB.B2.25.03.04 (should be B3) | DF | AA61HB | NA | NA | 0.544 | 7.76% | 0 | 0 | 0.1438 | 100, 46.5, 21.6, 10.1, 4.68, 2.18, 1.01, 0.47 | 2.15 | NO | curve is going in the wrong direction | Data not analysed; chem. reacts w/ NR & gives false + results in columns C1-C4; cells in first 3-4 col. incorp. large amount of dye | FAL.NHK.SLS.25.03.03 |
| FAL.NHK.HB.B3.26.03.04 (should be B4) | DF | AA61HB | NA | NA | 0.652 | 15.30% | 0 | 0 | -1.2210 | 100, 46.5, 21.6, 10.1, 4.68, 2.18, 1.01, 0.47 | 2.15 | NO | curve is going in the wrong direction | Data not analysed; chem. seems to react w/ NR & gives false + results in col. C1-C4; cells in first 3-4 col. Incorp. large amount of dye; ppt in 1X C1-C2 | FAL.NHK.SLS.26.03.04 |
| FAL.NHK.HB.B4.25.04.04 (should be B5) | DF | AA61HB | 0.0521 | 0.00013 | 0.850 | 3.86% | 4 | 2 | 0.9900 | 1.0, 0.465, 0.216, 0.101, 0.046, 0.022, 0.010, 0.005 | 2.15 | YES | | | FAL.NHK.SLS.25.04.04 |
| FAL.NHK.HB.B5.28.04.04 (should be B6) | DF | AA61HB | 0.0619 | 0.00015 | 0.928 | 2.72% | 4 | 1 | 0.9862 | 1.00, 0.465, 0.216, 0.101, 0.047, 0.022, 0.010, 0.005 | 2.15 | YES | | | FAL.NHK.SLS.28.04.03 |
| FAL.NHK.HB.13.05.04 (should be B7) | DF | AA61HB | NA | NA | 0.603 | 2.36% | 4 | 1 | NA | 1.00, 0.465, 0.216, 0.101, 0.047, 0.022, 0.010, 0.005 | 2.15 | NO | no points between 50-100%; SD rejects test | odd plate; looks as if the dilutions ran left to right for top three wells & right to left for bottom three. | FAL.NHK.SLS.13.05.04 |
| FAL.NHK.HB.B7.10.06.04 (should be B8) | DF | AA61HB | 0.0233 | 0.00006 | 0.922 | 1.93% | 5 | 3 | 0.9799 | 1.0, 0.47, 0.22, 0.10, 0.05, 0.022, 0.010, 0.0047 | 2.15 | YES | | | FAL.NHK.SLS.10.06.04 |

## LACTIC ACID

| | | | | | | | | | | | | | | | |
|---|---|---|---|---|---|---|---|---|---|---|---|---|---|---|---|
| ***IIVS*** | | | | | | | | | | | | | | | |
| A1 | RF | AA61FW | 1360 | 15.114 | 0.573 | 1.92% | 1 | 1 | 0.9351 | 10000, 1000, 100, 10, 1, 0.1, 0.01, 0.001 | 10 | RF | range finder | | SLS-A2-N040320B |
| B1 | DF | AA61FW | 1260 | 13.976 | 0.552 | 3.33% | 4 | 2 | 0.9915 | 10000, 5556, 3086, 1715, 953, 529, 294, 163 | 1.8 | YES | | | SLS-B1-N040423A |
| B2 | DF | AA61FW | 1210 | 13.377 | 0.561 | 10.36% | 2 | 2 | 0.9868 | 10000, 5556, 3086, 1715, 953, 529, 294, 163 | 1.8 | YES | | | SLS-B2-N040424A |
| B3 | DF | AA61FW | 1470 | 16.344 | 0.458 | 4.02% | 4 | 2 | 0.9836 | 5000, 3333, 2222, 1481, 988, 658, 439, 293 | 1.5 | YES | | | SLS-B3-N040506A |
| ***ECBC*** | | | | | | | | | | | | | | | |
| AA61NL-A1 | RF | AA61NL | 1060 | 11.786 | 0.411 | 3.08% | 1 | 1 | 0.8632 | 10000, 1000, 100, 10, 1, 0.1, 0.01, 0.001 | 10 | RF | range finder | | SLS-P6 |

# NHK NRU Reference Substance Data

| Experiment ID NHK Cells | Assay Type[1] | Substance ID | $IC_{50}$ (ug/mL) | $IC_{50}$ (mM) | Mean VC OD[2] | Difference of right/left VC from mean VC[3] | Number of Points 0 - 50 %[4] | Number of Points 50 - 100 %[5] | $R^2$ [6] | Exposure Concentrations (ug/mL)[7] | Dilution Factor[8] | Acceptable Tests[9] | Rationale for Unacceptability | Notes | PC ID |
|---|---|---|---|---|---|---|---|---|---|---|---|---|---|---|---|
| AA61NL-B1 | DF | AA61NL | 1330 | 14.770 | 0.999 | 0.10% | 3 | 4 | 0.9731 | 10000, 4651, 2163, 1006, 468, 218, 101, 47.1 | 2.15 | YES | | | SLS-P26 |
| AA61NL-B2 | DF | AA61NL | 1310 | 14.418 | 0.909 | 0.66% | 3 | 3 | 0.9901 | 10000, 4651, 2163, 1006, 468, 218, 101, 47.1 | 2.15 | YES | | | SLS-P28 |
| AA61NL-B3 | DF | AA61NL | 1230 | 13.658 | 0.824 | 3.46% | 3 | 5 | 0.9532 | 10000, 4651, 2163, 1006, 468, 218, 101, 47.1 | 2.15 | YES | | | SLS-P30 |
| ***FRAME*** | | | | | | | | | | | | | | | |
| FAL.NHK.JT.A1.25.04.04 | RF | AA61JT | 1880 | 20.863 | 0.777 | 7.41% | 1 | 1 | 0.7636 | 10000, 1000, 100, 10, 1, 0.1, 0.01, 0.001 | 10 | RF | range finder | | FAL.NHK.SLS.25.04.04 |
| FAL.NHK.JT.B1.28.04.04 | DF | AA61JT | 1350 | 15.010 | 0.904 | 0.04% | 3 | 5 | 0.9767 | 10000, 4651, 2163, 1006, 468, 218, 101, 47.1 | 2.15 | YES | | | FAL.NHK.SLS.28.04.03 |
| FAL.NHK.JT.B2.13.05.04 | DF | AA61JT | 1360 | 15.079 | 0.597 | 1.07% | 3 | 4 | 0.9702 | 10000, 4651, 2163, 1006, 468, 218, 101, 47.1 | 2.15 | YES | | | FAL.NHK.SLS.13.05.04 |
| FAL.NHK.JT.B3.10.06.04 | DF | AA61JT | 1250 | 13.879 | 0.670 | 6.11% | 3 | 1 | 0.9322 | 10000, 4651, 2163, 1006, 468, 218, 101, 47.1 | 2.15 | YES | | | FAL.NHK.SLS.10.06.04 |

## LINDANE

| | | | | | | | | | | | | | | | |
|---|---|---|---|---|---|---|---|---|---|---|---|---|---|---|---|
| ***IIVS*** | | | | | | | | | | | | | | | |
| A1 | RF | AA61PJ | 46.8 | 0.161 | 0.634 | 0.78% | 1 | 1 | 0.7927 | 100, 10, 1, 0.1, 0.01, 0.001, 0.0001, 0.00001 | 10 | RF | range finder | ppt in 2x C1 and 1X C1 | SLS-A3-N040331A |
| B1 | DF | AA61PJ | 15.7 | 0.054 | 0.547 | 10.52% | 5 | 2 | 0.9540 | 200, 111, 61.7, 34.3, 19.1, 10.6, 5.88, 3.27 | 1.8 | YES | | ppt in 1X C1-C3 & 2X C1-C3; SD removed top 3 doses from Hill analyses; ppts and flattening of response curve were observed | SLS-B8-N040819A |
| B2 | DF | AA61PJ | 18.0 | 0.062 | 0.582 | 6.00% | 4 | 2 | 0.9704 | 200, 111, 61.7, 34.3, 19.1, 10.6, 5.88, 3.27 | 1.8 | YES | | ppt in 1X C1-C3 & 2X C1-C2; SD removed top 3 doses from Hill analyses; ppts and flattening of response curve were observed | SLS-B9-N040820A |
| B3 | DF | AA61PJ | 13.2 | 0.045 | 0.532 | 6.43% | 2 | 3 | 0.9626 | 200, 111, 61.7, 34.3, 19.1, 10.6, 5.88, 3.27 | 1.8 | YES | | ppt in 1X C1-C4 & 2X C1-C3; SD removed top 3 doses from Hill analyses; ppts and flattening of response curve were observed | SLS-B10-N040903A |
| ***ECBC*** | | | | | | | | | | | | | | | |
| AA61FK-A1 | RF | AA61FK | 40.6 | 0.140 | 0.821 | 9.29% | 2 | 2 | 0.8809 | 1000, 100, 10, 1, 0.1, 0.01, 0.001, 0.0001 | 10 | RF | range finder | ppt in 2X C1-C2; ppt in 1X C | SLS-P15 |
| AA61FK-B1 | DF | AA61FK | 21.4 | 0.074 | 0.550 | 6.75% | 5 | 2 | 0.9657 | 500, 233, 108, 50.3, 23.4, 10.9, 5.06, 2.35 | 2.15 | YES | | ppt in 2X C1-C3; ppt in 1X C1-C4; | SLS-P49 |
| AA61FK-B2 | DF | AA61FK | 15.5 | 0.053 | 0.558 | 2.09% | 5 | 2 | 0.8770 | 100, 68.0, 46.3, 31.5, 21.4, 14.6, 9.9, 6.7 | 1.47 | YES | | ppt in 2X C1-C3; ppt in 1X C1-C4 | SLS-P53 |
| AA61FK-B3 | DF | AA61FK | 20.3 | 0.070 | 0.619 | 6.30% | 4 | 4 | 0.9653 | 100, 68.0, 46.3, 31.5, 21.4, 14.6, 9.9, 6.7 | 1.47 | YES | | ppt in 2X C1-C3; ppt in 1X C1-C4 | SLS-P55 |
| ***FRAME*** | | | | | | | | | | | | | | | |
| FAL.NHK.KN.A1.14.05.04 | RF | AA61KN | 61.7 | 0.212 | 0.694 | 7.78% | 2 | 1 | 0.8847 | 1000, 100, 10, 1, 0.1, 0.01, 0.001, 0.0001 | 10 | RF | range finder | ppt in 1X C1 | FAL.NHK.SLS.14.05.03 |
| FAL.NHK.KN.B1.20.08.04 | DF | AA61KN | 30.8 | 0.106 | 0.752 | 5.39% | 6 | 2 | 0.9626 | 2000, 930, 433, 201, 93.6, 43.5, 20.3, 9.42 | 2.15 | YES | | ppt in 2X C1-C3; ppt in 1X C1-C6 | FAL.NHK.SLS.20.08.04 |
| FAL.NHK.KN.B2.29.10.04 | DF | AA61KN | 16.8 | 0.058 | 0.450 | 9.76% | 7 | 1 | 0.9529 | 2000, 930, 433, 201, 93.6, 43.5, 20.3, 9.42 | 2.15 | YES | | ppt in 2X C1-C4; ppt in 1X C1-C5 | FAL.NHK.SLS.29.10.04 |
| FAL.NHK.KN.B3.05.11.04 | DF | AA61KN | 21.9 | 0.075 | 0.453 | 7.72% | 6 | 2 | 0.9894 | 2000, 930, 433, 201, 93.6, 43.5, 20.3, 9.42 | 2.15 | YES | | ppt in 1X C1-C5 | FAL.NHK.SLS.05.11.04 |

# NHK NRU Reference Substance Data

| Experiment ID NHK Cells | Assay Type[1] | Substance ID | $IC_{50}$ (ug/mL) | $IC_{50}$ (mM) | Mean VC OD[2] | Difference of right/left VC from mean VC[3] | Number of Points 0 - 50 %[4] | Number of Points 50 - 100 %[5] | $R^2$ [6] | Exposure Concentrations (ug/mL)[7] | Dilution Factor[8] | Acceptable Tests[9] | Rationale for Unacceptability | Notes | PC ID |
|---|---|---|---|---|---|---|---|---|---|---|---|---|---|---|---|
| **LITHIUM I CARBONATE** | | | | | | | | | | | | | | | |
| ***IIVS*** | | | | | | | | | | | | | | | |
| A2 | RF | AA61RN | 839 | 11.355 | 0.736 | 1.65% | 1 | 0 | 0.9100 | 1000, 100, 10, 1, 0.1,0.01, 0.001, 0.0001 | 10 | RF | range finder | | SLS-A2 |
| B1 | DF | AA61RN | 524 | 7.092 | 0.364 | 1.54% | 3 | 2 | 0.9453 | 2000, 1333, 889, 593, 395, 263, 176, 117 | 1.5 | YES | | | SLS-B1 |
| B2 | DF | AA61RN | 519 | 7.024 | 0.26 | 7.33% | 3 | 2 | 0.9436 | 2000, 1333, 889, 593, 395, 263, 176, 117 | 1.5 | YES | | | SLS-B2 |
| B3 | DF | AA61RN | 571 | 7.728 | 0.315 | 8.55% | 3 | 2 | 0.958 | 2000, 1333, 889, 593, 395, 263, 176, 117 | 1.5 | YES | | | SLS-B3 |
| ***ECBC*** | | | | | | | | | | | | | | | |
| AA61RR-A1 | RF | AA61RR | 767 | 10.380 | 0.750 | 3.35% | 1 | 1 | 0.8957 | 1000, 100, 10, 1.0, 0.1, 0.01, 0.001, 0.0001 | 10 | RF | range finder | range finder | SLS-P2 |
| AA61RR-B1 | DF | AA61RR | 308 | 4.168 | 0.361 | 2.25% | 6 | 2 | 0.9095 | 2000, 1361, 926, 630, 428, 291, 198, 135 | 1.47 | YES | | | SLS-P5 |
| AA61RR-B2 | DF | AA61RR | 541 | 7.322 | 1.107 | 4.03% | 4 | 4 | 0.9425 | 2000, 1361, 926, 630, 428, 291, 198, 135 | 1.47 | YES | | | SLS-P7 |
| AA61RR-B3 | DF | AA61RR | 384 | 5.197 | 0.803 | 0.21% | 5 | 3 | 0.9639 | 2000, 1361, 926, 630, 428, 291, 198, 135 | 1.47 | YES | | | SLS-P9 |
| ***FRAME*** | | | | | | | | | | | | | | | |
| FAL.NHK.RM.A1.010803 | RF | AA61RM | 78.5 | 1.062 | 0.568 | 13.97% | 2 | 5 | 0.7509 | 1000, 100, 10, 1, 0.1, 0.01, 0.001, 0.0001 | 10 | RF | range finder | | FAL.NHK.SLS.010803 |
| FAL.NHK.RM.B1.080803 | DF | AA61RM | 378 | 5.116 | 0.794 | 1.03% | 2 | 6 | 0.8188 | 1000, 465, 216, 101, 46.8, 21.8, 10.1, 4.7 | 2.15 | YES | | high background | FAL.NHK.SLS.08.08.03 |
| FAL.NHK.RM.B2.15.08.03 | DF | AA61RM | 518 | 7.010 | 0.433 | 6.00% | 1 | 4 | 0.8092 | 1000, 465, 216, 101, 46.8, 21.8, 10.1, 4.7 | 2.15 | YES | | | FAL.NHK.SLS.15.08.03 |
| FAL.NHK.RM.B3.23.08.03 | DF | AA61RM | 478 | 6.469 | 0.614 | 1.71% | 2 | 4 | 0.8168 | 1000, 465, 216, 101, 46.8, 21.8, 10.1, 4.7 | 2.15 | NO | PC failed | | FAL.NHK.SLS.230803 |
| FAL.NHK.RM.B4.05.09.03 | DF | AA61RM | 303 | 4.101 | 0.095 | 9.10% | 2 | 2 | 0.5447 | 1000, 465, 216, 101, 46.8, 21.8, 10.1, 4.7 | 2.15 | NO | low r2 | | FAL.NHK.SLS.050903 |
| FAL.NHK.RM.B5.01.10.03 | DF | AA61RM | 887 | 12.004 | 1.302 | 0.06% | 1 | 3 | 0.8807 | 1000, 465, 216, 101, 46.8, 21.8, 10.1, 4.7 | 2.15 | NO | PC failed | | FAL.NHK.SLS.01.10.03 |
| FAL.NHK.RM.B5.15.10.03 (should be B6?) | DF | AA61RM | 471 | 6.374 | 0.529 | 0.71% | 2 | 6 | 0.2797 | 1000, 465, 216, 101, 46.8, 21.8, 10.1, 4.7 | 2.15 | NO | low r2 | | FAL.NHK.SLS.15.10.03 |
| FAL.NHK.RM.28.11.03 | DF | AA61RM | 561 | 7.592 | 0.153 | 3.93% | 1 | 5 | 0.7316 | 1000, 465, 216, 101, 46.8, 21.8, 10.1, 4.7 | 2.15 | YES | | challenging chemical; SMT accepts this test | FAL.NHK.SLS.28.11.03 |
| **MEPROBAMATE** | | | | | | | | | | | | | | | |
| ***IIVS*** | | | | | | | | | | | | | | | |
| A1 | RF | AA61LS | 507 | 2.322 | 0.431 | 13.02% | 1 | 2 | 0.8210 | 1000, 100, 10, 1, 0.1, 0.01, 0.001, 0.0001 | 10 | RF | range finder | | SLS-A1-N040317B |
| B1 | DF | AA61LS | 631 | 2.890 | 0.650 | 3.10% | 3 | 4 | 0.9748 | 2000, 1250, 781, 488, 305, 191, 119, 74.5 | 1.6 | YES | | | SLS-B8-N040819A |
| B2 | DF | AA61LS | 705 | 3.228 | 0.691 | 2.97% | 3 | 4 | 0.9666 | 2000, 1250, 781, 488, 305, 191, 119, 74.5 | 1.6 | YES | | | SLS-B9-N040820A |
| B3 | DF | AA61LS | 537 | 2.460 | 0.649 | 2.00% | 3 | 3 | 0.9670 | 2000, 1250, 781, 488, 305, 191, 119, 74.5 | 1.6 | YES | | | SLS-B10-N040903A |
| ***ECBC*** | | | | | | | | | | | | | | | |
| AA61RJ-A1 | RF | AA61RJ | 324 | 1.49 | 0.677 | 2.99% | 1 | 5 | 0.9463 | 1000, 100, 10, 1, 0.1, 0.01, 0.001, 0.0001 | 10 | RF | range finder | | SLS-P2 |
| AA61RJ-B1 | DF | AA61RJ | 746 | 3.419 | 1.112 | 0.28% | 3 | 4 | 0.9663 | 2000, 1361, 926, 630, 428, 291, 198, 135 | 1.47 | YES | | | SLS-P8 |
| AA61RJ-B2 | DF | AA61RJ | 883 | 4.045 | 1.180 | 2.65% | 2 | 6 | 0.9767 | 2000, 1361, 926, 630, 428, 291, 198, 135 | 1.47 | YES | | | SLS-P10 |
| AA61RJ-B3 | DF | AA61RJ | 653 | 2.992 | 0.784 | 1.54% | 3 | 5 | 0.9321 | 2000, 1361, 926, 630, 428, 291, 198, 135 | 1.47 | YES | | | SLS-P11 |
| ***FRAME*** | | | | | | | | | | | | | | | |
| FAL.NHK.HV.A1.11/02/04 | RF | AA61HV | 982 | 4.497 | 1.600 | 0.24% | 1 | 4 | 0.8090 | 1000, 100, 10, 1, 0.1, 0.01, 0.001, 0.0001 | 10 | RF | range finder | C8 outlier removed by SD | FAL.NHK.SLS.11.02.04 |

# NHK NRU Reference Substance Data

| Experiment ID NHK Cells | Assay Type[1] | Substance ID | $IC_{50}$ (ug/mL) | $IC_{50}$ (mM) | Mean VC OD[2] | Difference of right/left VC from mean VC[3] | Number of Points 0 - 50 %[4] | Number of Points 50 - 100 %[5] | $R^2$ [6] | Exposure Concentrations (ug/mL)[7] | Dilution Factor[8] | Acceptable Tests[9] | Rationale for Unacceptability | Notes | PC ID |
|---|---|---|---|---|---|---|---|---|---|---|---|---|---|---|---|
| FAL.NHK.HV.A2.18/02/04 | DF | AA61HV | 4980 | 22.801 | 1.600 | 0.24% | 1 | 4 | 0.4736 | 5000, 2326, 1082, 503, 234, 109, 50.6, 23.5 | 2.15 | NO | PC failed | this is a definitive test since conc.series is different from A1 range finder | FAL.NHK.SLS.18.02.04 |
| FAL.NHK.HV.B1.26/02/04 | DF | AA61HV | 30.8 | 0.141 | 0.254 | 10.02% | 6 | 2 | 0.9661 | 2500, 1163, 541, 252, 117, 54.4, 25.3, 11.8 | 2.15 | YES | | | FAL.NHK.SLS/NB.26.02 .03 |
| FAL.NHK.HV.B2.18/03/04 | DF | AA61HV | 77.8 | 0.356 | 0.378 | 0.13% | 4 | 4 | 0.9274 | 1000, 465, 216, 101, 46.8, 21.8, 10.1, 4.71 | 2.15 | YES | | | FAL.NHK.SLS.18.03.03 |
| FAL.NHK.HV.B3.25.03.04 | DF | AA61HV | 379 | 1.738 | 0.803 | 0.65% | 2 | 5 | 0.7687 | 1000, 465, 216, 101, 46.8, 21.8, 10.1, 4.71 | 2.15 | YES | | | FAL.NHK.SLS.25.03.03 |

## MERCURY II CHLORIDE

| | | | | | | | | | | | | | | | |
|---|---|---|---|---|---|---|---|---|---|---|---|---|---|---|---|
| ***IIVS*** | | | | | | | | | | | | | | | |
| A1 | RF | AA61MX | 3.25 | 0.012 | 0.485 | 7.23% | 3 | 0 | 0.9831 | 1000, 100, 10, 1, 0.1, 0.01, 0.001, 0.0001 | 10 | RF | range finder; no points between 50 - 100% | ppt in 1X C1 | SLS-A1-N040317B |
| B1 | DF | AA61MX | 4.54 | 0.017 | 0.632 | 0.90% | 4 | 0 | 0.9852 | 20.0, 12.5, 7.81, 4.88, 3.05, 1.91, 1.19, 0.745 | 1.6 | NO | no points between 50 - 100% | | SLS-B1-N040423A |
| B2 | DF | AA61MX | 5.17 | 0.019 | 0.568 | 4.76% | 0 | 2 | 0.9915 | 20.0, 12.5, 7.81, 4.88, 3.05, 1.91, 1.19, 0.745 | 1.6 | NO | no points between 0 - 50% | | SLS-B2-N040424A |
| B3 | DF | AA61MX | 5.10 | 0.019 | 0.495 | 6.71% | 0 | 1 | 0.9819 | 20.0, 15.0, 11.3, 8.50, 6.39, 4.81, 3.61, 2.72 | 1.33 | NO | no points between 0 - 50% | | SLS-B3-N040506A |
| B4 | DF | AA61MX | 5.26 | 0.019 | 0.785 | 2.29% | 2 | 3 | 0.9359 | 8.00, 7.27, 6.61, 6.01, 4.46, 4.97, 4.52, 4.11 | 1.1 | YES | | | SLS-B6-N040716A |
| B5 | DF | AA61MX | 5.44 | 0.020 | 0.715 | 4.31% | 1 | 3 | 0.9529 | 8.00, 7.27, 6.61, 6.01, 4.46, 4.97, 4.52, 4.11 | 1.1 | YES | | | SLS-B7-N040717B |
| B6 | DF | AA61MX | 5.35 | 0.020 | 0.612 | 0.00% | 2 | 2 | 0.9585 | 8.00, 7.27, 6.61, 6.01, 4.46, 4.97, 4.52, 4.11 | 1.1 | YES | | | SLS-B8-N040819A |
| ***ECBC*** | | | | | | | | | | | | | | | |
| AA61KP-A1 | RF | AA61KP | 2.24 | 0.008 | 0.432 | 8.13% | 3 | 1 | 0.9582 | 1000, 100, 10, 1, 0.1, 0.01, 0.001, 0.0001 | 10 | RF | range finder | ppt in 1X C1 | SLS-P2 |
| AA61KP-B1 | DF | AA61KP | 6.95 | 0.026 | 1.076 | 3.04% | 1 | 1 | 0.9276 | 10.0, 6.80, 4.63, 3.15, 2.14, 1.46, 0.99, 0.67 | 1.47 | YES | | | SLS-P8 |
| AA61KP-B2 | DF | AA61KP | 7.87 | 0.029 | 1.169 | 3.40% | 2 | 6 | 0.9666 | 10.0, 8.26, 6.83, 5.65, 4.67, 3.86, 3.19, 2.63 | 1.21 | YES | | | SLS-P10 |
| AA61KP-B3 | DF | AA61KP | 5.79 | 0.021 | 0.831 | 1.85% | 2 | 5 | 0.9856 | 10.0, 8.26, 6.83, 5.65, 4.67, 3.86, 3.19, 2.63 | 1.21 | YES | | | SLS-P11 |
| ***FRAME*** | | | | | | | | | | | | | | | |
| FAL.NHK.HA.A1.11/02/04 | RF | AA61HA | 3.56 | 0.013 | 1.321 | 3.96% | 3 | 0 | 0.9647 | 1000, 100, 10, 1, 0.1, 0.01, 0.001, 0.0001 | 10 | RF | range finder | ppt in 1X C1 | FAL.NHK.SLS.11.02.04 |
| FAL.NHK.HA.B1.18.03.04 | DF | AA61HA | 4.66 | 0.017 | 0.486 | 2.93% | 2 | 3 | 0.9663 | 10.0, 6.8, 4.63, 3.15, 2.14, 1.46, 0.99, 0.67 | 1.47 | YES | | | FAL.NHK.SLS.18.03.03 |
| FAL.NHK.HA.B2.19.03.04 | DF | AA61HA | 4.98 | 0.018 | 0.533 | 9.73% | 2 | 6 | 0.9174 | 10.0, 6.8, 4.63, 3.15, 2.14, 1.46, 0.99, 0.67 | 1.47 | YES | | | FAL.NHK.SLS.19.03.03 |
| FAL.NHK.HA.B2.25.03.04 (should be B3) | DF | AA61HA | 6.56 | 0.024 | 0.533 | 4.35% | 2 | 6 | 0.8230 | 10.0, 6.8, 4.63, 3.15, 2.14, 1.46, 0.99, 0.67 | 1.47 | YES | | | FAL.NHK.SLS.25.03.03 |

## METHANOL

| | | | | | | | | | | | | | | | |
|---|---|---|---|---|---|---|---|---|---|---|---|---|---|---|---|
| ***IIVS*** | | | | | | | | | | | | | | | |
| A1 | RF | AA61FZ | 601 | 18.763 | 0.567 | 1.73% | 1 | 1 | 0.9073 | 1000, 100, 10, 1, 0.1, 0.01, 0.001, 0.0001 | 10 | RF | range finder | | SLS-A5-N040401A |
| B1 | DF | AA61FZ | 2160 | 67.345 | 0.597 | 1.70% | 1 | 7 | 0.8425 | 2000, 1250, 781, 488, 305, 191, 119, 74.5 | 1.6 | YES | | | SLS-B4-N040513C |
| B2 | DF | AA61FZ | 1850 | 57.851 | 0.546 | 2.01% | 1 | 4 | 0.9223 | 2000, 1250, 781, 488, 305, 191, 119, 74.5 | 1.6 | YES | | | SLS-B5-N040514B |
| B3 | DF | AA61FZ | 2290 | 71.336 | 0.790 | 3.64% | 1 | 3 | 0.9218 | 2500, 1563, 977, 610, 381, 238, 149, 93.1 | 1.6 | YES | | | SLS-B6-N040716A |
| B4 | DF | AA61FZ | NA | NA | 0.707 | 6.86% | 0 | 3 | 0.9030 | 2500, 1563, 977, 610, 381, 238, 149, 93.1 | 1.6 | NO | no points between 0 - 50% | | SLS-B7-N040717B |
| ***ECBC*** | | | | | | | | | | | | | | | |

# NHK NRU Reference Substance Data

| Experiment ID NHK Cells | Assay Type[1] | Substance ID | $IC_{50}$ (ug/mL) | $IC_{50}$ (mM) | Mean VC OD[2] | Difference of right/left VC from mean VC[3] | Number of Points 0 - 50 %[4] | Number of Points 50 - 100 %[5] | $R^2$ [6] | Exposure Concentrations (ug/mL)[7] | Dilution Factor[8] | Acceptable Tests[9] | Rationale for Unacceptability | Notes | PC ID |
|---|---|---|---|---|---|---|---|---|---|---|---|---|---|---|---|
| AA61MJ-A1 | RF | AA61MJ | NA | NA | 0.909 | 0.96% | 0 | 8 | NA | 2500, 250, 25, 2.5, 0.25, 0.025, 0.0025, 0.00025 | 10 | RF | range finder; no points between 0 - 50% | | SLS-P19 |
| AA61MJ-B1 | DF | AA61MJ | NA | NA | 0.606 | 0.30% | 0 | 4 | NA | 3500, 2381, 1620, 1102, 750, 510, 347, 236 | 1.47 | NO | no points between 0 - 50% | 0.02% DMSO in dosing solutions; highest stock conc. is 700,087 ug/ml | SLS-P48 |
| AA61MJ-B2 | DF | AA61MJ | NA | NA | 0.759 | 0.65% | 0 | 8 | NA | 3500, 2893, 2391, 1976, 1633, 1349, 1115, 922 | 1.21 | NO | no points between 0 - 50% | no toxicity | SLS-P60 |
| AA61MJ-B3 | DF | AA61MJ | NA | NA | 0.831 | 3.88% | 0 | 8 | NA | 3500, 2893, 2391, 1976, 1633, 1349, 1115, 922 | 1.21 | NO | no points between 0 - 50% | slight toxicity | SLS-P61 |
| ***FRAME*** | | | | | | | | | | | | | | | |
| FAL.NHK.RG.A1.24.09.04 | RF | AA61RG | 635 | 19.829 | 0.632 | 0.55% | 1 | 3 | 0.6562 | 1000, 100, 10, 1.0, 0.1, 0.01, 0.001, 0.0001 | 10 | RF | range finder | | FAL.NHK.SLS.24.09.03 |
| FAL.NHK.RG.B1.01.10.04 | DF | AA61RG | 8610 | 268.725 | 1.078 | 6.69% | 0 | 8 | 0.4209 | 1000, 465, 216, 101, 46.8, 21.8, 10.1, 4.71 | 2.15 | NO | PC failed; no points between 50-100% | | FAL.NHK.SLS.01.10.04 |
| FAL.NHK.RG.B2.07.10.04 | DF | AA61RG | 1360 | 42.297 | 0.649 | 3.62% | 1 | 7 | 0.9324 | 2000, 930, 433, 201, 93.6, 43.5, 20.3, 9.42 | 2.15 | YES | | | FAL.NHK.SLS.07.10.03 |
| FAL.NHK.RG.B3.22.10.04 | DF | AA61RG | 2170 | 67.812 | 0.809 | 0.56% | 0 | 8 | 0.9463 | 2000, 930, 433, 201, 93.6, 43.5, 20.3, 9.42 | 2.15 | NO | no points between 0-50% | | FAL.NHK.SLS.22.10.04 (NB) |
| FAL.NHK.RG.B4.28.10.04 | DF | AA61RG | 1100 | 34.301 | 0.625 | 8.71% | 2 | 1 | 0.9422 | 2500, 1163, 541, 252, 117, 54.4, 25.3, 11.8 | 2.15 | YES | | | FAL.NHK.SLS.28.10.04 |
| FAL.NHK.RG.B5.05.11.04 | DF | AA61RG | 938 | 29.262 | 0.467 | 6.43% | 2 | 6 | 0.5431 | 2500, 1163, 541, 252, 117, 54.4, 25.3, 11.8 | 2.15 | YES | | | FAL.NHK.SLS.05.11.04 |

## NICOTINE

| | | | | | | | | | | | | | | | |
|---|---|---|---|---|---|---|---|---|---|---|---|---|---|---|---|
| ***IIVS*** | | | | | | | | | | | | | | | |
| A1 | RF | AA61HL | 143 | 0.881 | 0.498 | 34.80% | 1 | 1 | 0.9606 | 10000, 1000, 100, 10, 1, 0.1, 0.01, 0.001 | 10 | RF | range finder; % VC difference > 15 | volatility problem; VC1 OD values much lower than VC2; VC1 removed from subsequent analysis by SD | SLS-A4-N040331N |
| B1 | DF | AA61HL | 127 | 0.785 | 0.572 | 1.82% | 4 | 4 | 0.9551 | 2000, 909, 413, 188, 85.4, 38.8, 17.6, 8.02 | 2.2 | YES | | outlier in C6 removed by SD: used plate sealer | SLS-B4-N040513C |
| B2 | DF | AA61HL | 128 | 0.791 | 0.552 | 4.42% | 4 | 4 | 0.9558 | 2000, 909, 413, 188, 85.4, 38.8, 17.6, 8.02 | 2.2 | YES | | | SLS-B5-N040514B |
| B3 | DF | AA61HL | 79.6 | 0.491 | 0.736 | 1.75% | 5 | 3 | 0.9593 | 2000, 909, 413, 188, 85.4, 38.8, 17.6, 8.02 | 2.2 | YES | | | SLS-B6-N040716A |
| ***ECBC*** | | | | | | | | | | | | | | | |
| AA61NA-A1 | RF | AA61NA | 225 | 1.390 | 0.541 | 27.12% | 1 | 2 | 0.8258 | 10000, 1000, 100, 10, 1, 0.1, 0.01, 0.001 | 10 | RF | range finder; % VC difference > 15 | volatility problem | SLS-P38 |
| AA61NA-B1(sealer) | DF | AA61NA | 69.7 | 0.429 | 0.718 | 4.19% | 5 | 2 | 0.8884 | 5000, 2326, 1082, 503, 234, 109, 51, 24 | 2.15 | YES | | | SLS-P40 |
| AA61NA-B2 (sealer) | DF | AA61NA | 94.2 | 0.581 | 0.680 | 5.37% | 5 | 3 | 0.9635 | 2000, 930, 433, 201, 93.6, 43.5, 20.3, 9.42 | 2.15 | YES | | | SLS-P42 |
| AA61NA-B3 (sealer) | DF | AA61NA | 119 | 0.734 | 0.871 | 4.38% | 5 | 3 | 0.9418 | 2000, 930, 433, 201, 93.6, 43.5, 20.3, 9.42 | 2.15 | YES | | | SLS-P44 |
| ***FRAME*** | | | | | | | | | | | | | | | |
| FAL.NHK.KL.A1.11.08.04 | RF | AA61KL | 277 | 1.706 | 0.455 | 16.01% | 1 | 1 | 0.5525 | 10000, 1000, 100, 10, 1, 0.1, 0.01, 0.001 | 10 | RF | range finder; % VC difference > 15 | | FAL.NHK.SLS.11.08.04 |
| FAL.NHK.KL.B1.17.09.04 | DF | AA61KL | 553 | 3.412 | 0.487 | 26.34% | 2 | 5 | 0.9450 | 5000, 2326, 1082, 503, 234, 109, 50.6, 23.6 | 2.15 | NO | % VC difference > 15 | outlier removed by SD; possible volatility problem | FAL.NHK.SLS.17.09.04 |
| FAL.NHK.KL.B2.30.09.04 | DF | AA61KL | 80 | 0.493 | 0.478 | 10.61% | 2 | 2 | 0.4411 | 5000, 2326, 1082, 503, 234, 109, 50.6, 23.6 | 2.15 | NO | SD rejects curve | "roller coaster" curve; some low concentrations give high toxicity; SD rejects test | FAL.NHK.SLS.30.09.03 |
| FAL.NHK.KL.B3.08.10.04 | DF | AA61KL | 193 | 1.191 | 0.552 | 19.76% | 2 | 5 | 0.8957 | 5000, 2326, 1082, 503, 234, 109, 50.6, 23.6 | 2.15 | NO | % VC difference > 15 | volatility issue | FAL.NHK.SLS.08.10.03 |
| FAL.NHK.KL.B4 .22.10.04 | DF | AA61KL | 91 | 0.561 | 0.730 | 2.67% | 6 | 2 | 0.8631 | 5000, 2326, 1082, 503, 234, 109, 50.6, 23.6 | 2.15 | YES | | | FAL.NHK.SLS.22.10.04 (NB) |
| FAL.NHK.KL.B5.29.10.04 | DF | AA61KL | 118 | 0.726 | 0.455 | 17.69% | 5 | 3 | 0.9316 | 2500, 1163, 541, 252, 117, 54.4, 25.3, 11.8 | 2.15 | NO | % VC difference > 15 | | FAL.NHK.SLS.29.10.04 |
| FAL.NHK.KL.B6.05.11.04 | DF | AA61KL | 224 | 1.380 | 0.376 | 14.23% | 3 | 5 | 0.8894 | 2500, 1163, 541, 252, 117, 54.4, 25.3, 11.8 | 2.15 | YES | | | FAL.NHK.SLS.05.11.04 |

# NHK NRU Reference Substance Data

| Experiment ID NHK Cells | Assay Type[1] | Substance ID | $IC_{50}$ (ug/mL) | $IC_{50}$ (mM) | Mean VC OD[2] | Difference of right/left VC from mean VC[3] | Number of Points 0 - 50 %[4] | Number of Points 50 - 100 %[5] | $R^2$ [6] | Exposure Concentrations (ug/mL)[7] | Dilution Factor[8] | Acceptable Tests[9] | Rationale for Unacceptability | Notes | PC ID |
|---|---|---|---|---|---|---|---|---|---|---|---|---|---|---|---|
| FAL.NHK.KL.B7.12.11.04 | DF | AA61KL | 85.7 | 0.528 | 0.727 | 2.28% | 5 | 3 | 0.9249 | 2500, 1163, 541, 252, 117, 54.4, 25.3, 11.8 | 2.15 | YES | | | FAL.NHK.SLS.12.11.04 |
| **PARAQUAT** | | | | | | | | | | | | | | | |
| ***IIVS*** | | | | | | | | | | | | | | | |
| A1 | RF | AA61GD | 84.5 | 0.329 | 0.578 | 2.76% | 3 | 0 | 0.9874 | 10000, 1000, 100, 10, 1, 0.1, 0.01, 0.001 | 10 | RF | range finder; no points between 50 - 100% | | SLS-A2-N040320B |
| B1 | DF | AA61GD | 50.4 | 0.196 | 0.564 | 3.71% | 6 | 2 | 0.9776 | 1000, 556, 309, 171, 95.3, 52.9, 29.4, 16.3 | 1.8 | YES | | | SLS-B1-N040423A |
| B2 | DF | AA61GD | 59.8 | 0.233 | 0.544 | 0.60% | 5 | 3 | 0.9719 | 1000, 556, 309, 171, 95.3, 52.9, 29.4, 16.3 | 1.8 | YES | | | SLS-B2-N040424A |
| B3 | DF | AA61GD | 50.1 | 0.194 | 0.496 | 3.71% | 6 | 2 | 0.9679 | 1000, 556, 309, 171, 95.3, 52.9, 29.4, 16.3 | 1.8 | YES | | | SLS-B3-N040506A |
| ***ECBC*** | | | | | | | | | | | | | | | |
| AA61MP-A1 | RF | AA61MP | 57.0 | 0.222 | 0.407 | 2.19% | 2 | 2 | 0.9152 | 10000, 1000, 100, 10, 1, 0.1, 0.01, 0.001 | 10 | RF | range finder | | SLS-P5 |
| AA61MP-B1 | DF | AA61MP | 41.4 | 0.161 | 0.597 | 0.17% | 5 | 3 | 0.9912 | 1000, 465, 216, 101, 46.8, 21.8, 10.1, 4.71 | 2.15 | YES | | | SLS-P20 |
| AA61MP-B2 | DF | AA61MP | 50.7 | 0.197 | 1.009 | 3.67% | 4 | 4 | 0.9822 | 1000, 465, 216, 101, 46.8, 21.8, 10.1, 4.71 | 2.15 | YES | | | SLS-P22 |
| AA61MP-B3 | DF | AA61MP | 52.7 | 0.205 | 0.528 | 7.61% | 5 | 3 | 0.9820 | 1000, 465, 216, 101, 46.8, 21.8, 10.1, 4.71 | 2.15 | YES | | | SLS-P24 |
| ***FRAME*** | | | | | | | | | | | | | | | |
| FAL.NHK.HP.A1.26.03.04 | RF | AA61HP | 74.5 | 0.290 | 0.562 | 6.58% | 2 | 1 | 0.9098 | 100000, 1000, 100,10, 1, 0.1, 0.01, 0.001 | 10 | RF | range finder | | FAL.NHK.SLS.26.03.04 |
| FAL.NHK.HP.B1.25.04.04 | DF | AA61HP | 57.9 | 0.225 | 0.795 | 3.51% | 4 | 4 | 0.9828 | 1000, 465, 216, 101, 46.8, 21.8, 10.1, 4.71 | 2.15 | YES | | | FAL.NHK.SLS.25.04.04 |
| FAL.NHK.HP.B2.28.04.04 | DF | AA61HP | 60.1 | 0.234 | 0.815 | 1.88% | 8 | 0 | 0.9066 | 1000, 680, 463, 315, 214, 146, 99.1, 67.4 | 1.47 | NO | no points between 50 - 100% | | FAL.NHK.SLS.28.04.03 |
| FAL.NHK.HP.B3.11.06.04 | DF | AA61HP | 28.1 | 0.109 | 0.790 | 4.43% | 4 | 4 | 0.8649 | 500, 233, 108, 50.3, 23.4, 10.9, 5.1, 2.4 | 2.15 | NO | PC failed | | FAL.NHK.SLS.11.06.04 |
| FAL.NHK.HP.B4.23.06.04 | DF | AA61HP | 103 | 0.399 | 0.811 | 17.53% | 3 | 3 | 0.9562 | 500, 233, 108, 50.3, 23.4, 10.9, 5.1, 2.4 | 2.15 | NO | % VC difference > 15 | | FAL.NHK.SLS.23.06.04 |
| FAL.NHK.HP.B5.25.06.04 | DF | AA61HP | 99.8 | 0.388 | 0.850 | 0.84% | 3 | 2 | 0.9498 | 500, 233, 108, 50.3, 23.4, 10.9, 5.1, 2.4 | 2.15 | YES | | | FAL.NHK.SLS.25.06.04 |
| FAL.NHK.HP.B6.12.08.04 | DF | AA61HP | 55.7 | 0.217 | 0.880 | 2.31% | 3 | 5 | 0.9207 | 500, 233, 108, 50.3, 23.4, 10.9, 5.1, 2.4 | 2.15 | NO | PC failed | | FAL.NHK.SLS.12.08.04 |
| FAL.NHK.HP-RB.B7.25.08.04 | DF | AA61HP | 132 | 0.515 | 0.635 | 4.72% | 2 | 2 | 0.8927 | 500, 233, 108, 50.3, 23.4, 10.9, 5.1, 2.4 | 2.15 | YES | | | FAL.NHK.SLS-RB.20.08.04 |
| **PARATHION** | | | | | | | | | | | | | | | |
| ***IIVS*** | | | | | | | | | | | | | | | |
| A1 | RF | AA61PS | 95.7 | 0.329 | 0.684 | 5.51% | 0 | 3 | 0.8685 | 1000, 100, 10, 1, 0.1, 0.01, 0.001, 0.0001 | 10 | RF | range finder; no points between 50 - 100% | SD didn't use data from highest dose in Hill analyses due to the effects of ppts; ppt in 2X C1-C2 & 1X C1-C2 | SLS-A3-N040331A |
| B1 | DF | AA61PS | 21.2 | 0.073 | 0.719 | 5.83% | 6 | 2 | 0.9735 | 1000, 455, 207, 93.9, 42.7, 19.4, 8.82, 4.01 | 2.2 | YES | | ppt in 2X C1-C6; ppt in 1X C1-C4 | SLS-B12-N041022B |
| B2 | DF | AA61PS | 37.8 | 0.130 | 0.656 | 1.73% | 3 | 3 | 0.9754 | 100, 62.5, 39.1, 24.4, 15.3, 9.54, 5.96, 3.73 | 1.6 | YES | | ppt in 2X C1-C3; ppt in 1X C1 | SLS-B113-N041029B |
| B3 | DF | AA61PS | 28.1 | 0.097 | 0.752 | 0.68% | 3 | 4 | 0.9677 | 100, 62.5, 39.1, 24.4, 15.3, 9.54, 5.96, 3.73 | 1.6 | YES | | ppt in 2X C1-C3; ppt in 1X C1-C2 | SLS-B14-N041030A |
| ***ECBC*** | | | | | | | | | | | | | | | |
| AA61MD-A1 | RF | AA61MD | 16.0 | 0.055 | 0.846 | 0.38% | 2 | 2 | 0.9789 | 1000, 100, 10, 1, 0.1, 0.01, 0.001, 0.0001 | 10 | RF | range finder | ppt in 2X C1-C2; ppt in 1X C | SLS-P39 |
| AA61MD-B1 | DF | AA61MD | 25.8 | 0.088 | 0.995 | 5.19% | 2 | 3 | 0.9372 | 100, 46.5, 21.6, 10.1, 4.68, 2.18, 1.01, 0.47 | 2.15 | YES | | ppt in 2X C1-C2 | SLS-P47 |
| AA61MD-B2 | DF | AA61MD | 45.2 | 0.155 | 1.228 | 1.72% | 2 | 6 | 0.9633 | 200, 93.0, 43.3, 20.1, 9.4, 4.4, 2.0, 0.9 | 2.15 | YES | | chunks in1X C1; ppt in 2X C1-C3 | SLS-P51 |

# NHK NRU Reference Substance Data

| Experiment ID NHK Cells | Assay Type[1] | Substance ID | $IC_{50}$ (ug/mL) | $IC_{50}$ (mM) | Mean VC OD[2] | Difference of right/left VC from mean VC[3] | Number of Points 0 - 50 %[4] | Number of Points 50 - 100 %[5] | $R^2$ [6] | Exposure Concentrations (ug/mL)[7] | Dilution Factor[8] | Acceptable Tests[9] | Rationale for Unacceptability | Notes | PC ID |
|---|---|---|---|---|---|---|---|---|---|---|---|---|---|---|---|
| AA61MD-B3 | DF | AA61MD | 31.1 | 0.107 | 0.737 | 1.12% | 3 | 5 | 0.9554 | 200, 93.0, 43.3, 20.1, 9.4, 4.4, 2.0, 0.9 | 2.15 | YES | | ppt in 2X C1-C3; ppt in 1X C1-C2 | SLS-P53 |
| ***FRAME*** | | | | | | | | | | | | | | | |
| FAL.NHK.KE.A1.20.10 .04 | DF | AA61KE | 87.1 | 0.299 | 1.237 | 0.40% | 2 | 6 | 0.9819 | 1000, 100, 10, 1, 0.1, 0.01, 0.001, 0.0001 | 10 | RF | range finder | ppt in 1X C1 | FAL.NHK.SLS.20.10.04 |
| FAL.NHK.KE.B1.29.10.04 | DF | AA61KE | 33.3 | 0.114 | 0.455 | 24.83% | 6 | 2 | 0.9604 | 1500, 698, 325, 151, 70.2, 32.7, 15.2, 7.06 | 2.15 | NO | %VC difference >15 | ppt in 2X C1-C3; ppt in C1-C5; volatility problem | FAL.NHK.SLS.29.10.04 |
| FAL.NHK.KE.B2.03.11.04 | DF | AA61KE | 18.9 | 0.065 | 0.606 | 8.86% | 6 | 2 | 0.9440 | 1500, 698, 325, 151, 70.2, 32.7, 15.2, 7.06 | 2.15 | YES | | ppt in 1X C1-C4 | FAL.NHK.SLS.03.11.04 |
| FAL.NHK.KE.B3.10.11.04 | DF | AA61KE | NA | NA | 1.144 | 4.04% | 8 | 0 | NA | 1500, 1020, 694, 472, 321, 219, 149, 101 | 1.47 | NO | no points between 50 - 100% | ppt in 2X C1-C5; ppt in 1X C1-C7 | FAL.NHK.SLS.10.11.04 |
| FAL.NHK.KE.B4.12.11.04 | DF | AA61KE | 32.1 | 0.110 | 0.809 | 3.24% | 6 | 2 | 0.9806 | 1500, 698, 325, 151, 70.2, 32.7, 15.2, 7.06 | 2.15 | YES | | ppt in 2X C1-C4; ppt in 1X C1-C3 | FAL.NHK.SLS.12.11.04 |
| FAL.NHK.KE.B5.17.11.04 | DF | AA61KE | 42.7 | 0.146 | 0.855 | 10.63% | 5 | 3 | 0.9385 | 1500, 698, 325, 151, 70.2, 32.7, 15.2, 7.06 | 2.15 | YES | | ppt in 2X C1-C4 | FAL.NHK.SLS.17.11.04 |

## PHENOBARBITAL

| | | | | | | | | | | | | | | | |
|---|---|---|---|---|---|---|---|---|---|---|---|---|---|---|---|
| ***IIVS*** | | | | | | | | | | | | | | | |
| A1 | RF | AA61FG | 378 | 1.630 | 0.575 | 0.41% | 1 | 1 | 0.9186 | 1000, 100, 10, 1, 0.1, 0.01, 0.001, 0.0001 | 10 | RF | range finder | | SLS-A5-N040401A |
| B1 | DF | AA61FG | 458 | 1.973 | 0.629 | 3.11% | 3 | 4 | 0.9782 | 2000, 1111, 617, 343, 191, 106, 58.8, 32.7 | 1.8 | YES | | ppt in 1X C1 and 2X C1 | SLS-B8-N040819A |
| B2 | DF | AA61FG | 362 | 1.560 | 0.655 | 0.89% | 3 | 4 | 0.9861 | 2000, 1111, 617, 343, 191, 106, 58.8, 32.7 | 1.8 | YES | | ppt in 2X C1 | SLS-B9-N040820A |
| B3 | DF | AA61FG | 322 | 1.387 | 0.623 | 0.79% | 4 | 4 | 0.9867 | 2000, 1111, 617, 343, 191, 106, 58.8, 32.7 | 1.8 | YES | | ppt in 2X C1 | SLS-B10-N040903A |
| ***ECBC*** | | | | | | | | | | | | | | | |
| AA61KV-A1 | RF | AA61KV | 436 | 1.875 | 0.953 | 0.85% | 1 | 7 | 0.8831 | 1000, 100, 10, 1, 0.1, 0.01, 0.001, 0.0001 | 10 | RF | range finder | | SLS-P56 |
| AA61KV-B1 | DF | AA61KV | 569 | 2.450 | 0.593 | 0.65% | 3 | 5 | 0.9763 | 3000, 1395, 649, 302, 140, 65, 30, 14 | 2.15 | YES | | ppt in 2X C1 | SLS-P57 |
| AA61KV-B2 | DF | AA61KV | 899 | 3.873 | 0.114 | 1.69% | 2 | 4 | 0.8199 | 3000, 1395, 649, 302, 140, 65, 30, 14 | 2.15 | YES | | ppt in 2X C1 | SLS-P58 |
| AA61KV-B3 | DF | AA61KV | 611 | 2.631 | 0.831 | 1.41% | 3 | 5 | 0.9887 | 3000, 1395, 649, 302, 140, 65, 30, 14 | 2.15 | YES | | ppt in 2X C1 | SLS-P59 |
| ***FRAME*** | | | | | | | | | | | | | | | |
| FAL.NHK.NJ.A1.24.09.04 | RF | AA61NJ | 253 | 1.089 | 0.619 | 11.58% | 1 | 1 | 0.7751 | 1000, 100, 10, 1.0, 0.1, 0.01, 0.001, 0.0001 | 10 | RF | range finder | | FAL.NHK.SLS.24.09.03 |
| FAL.NHK.NJ.B1.08.10.04 | DF | AA61NJ | 361 | 1.553 | 0.654 | 3.81% | 2 | 6 | 0.9642 | 1500, 698, 3.25, 151, 70.2, 32.7, 15.2, 7.06 | 2.15 | YES | | | FAL.NHK.SLS.08.10.03 |
| FAL.NHK.NJ.B2.22.10.04 | DF | AA61NJ | 455 | 1.959 | 0.827 | 4.81% | 3 | 4 | 0.9826 | 2500, 1163, 541, 252, 117, 54.4, 25.3, 11.8 | 2.15 | YES | | | FAL.NHK.SLS.22.10.04 (NB) |
| FAL.NHK.NJ.B3.28.10.04 | DF | AA61NJ | 264 | 1.135 | 0.683 | 11.67% | 3 | 5 | 0.9342 | 2500, 1163, 541, 252, 117, 54.4, 25.3, 11.8 | 2.15 | YES | | | FAL.NHK.SLS.28.10.04 |

## PHENOL

| | | | | | | | | | | | | | | | |
|---|---|---|---|---|---|---|---|---|---|---|---|---|---|---|---|
| ***IIVS*** | | | | | | | | | | | | | | | |
| A1 | RF | AA61PG | 34.4 | 0.366 | 0.617 | 98.64% | 2 | 3 | 0.9801 | 10000, 1000, 100, 10, 1, 0.1, 0.01, 0.001 | 10 | RF | range finder; % VC difference > 15 | volatility problem; VC1 OD values much lower than VC2; VC1 removed from subsequent analysis by SD | SLS-A3-N040331A |
| B1 | DF | AA61PG | 79.3 | 0.842 | 0.522 | 2.09% | 5 | 3 | 0.9749 | 2000, 909, 413, 188, 85.4, 38.8, 17.6, 8.02 | 2.2 | YES | | | SLS-B1-N040423A |
| B2 | DF | AA61PG | 76.6 | 0.814 | 0.548 | 2.89% | 3 | 3 | 0.9575 | 2000, 909, 413, 188, 85.4, 38.8, 17.6, 8.02 | 2.2 | YES | | ppt in 1X C1 | SLS-B2-N040424A |
| B3 | DF | AA61PG | 86.5 | 0.919 | 0.473 | 0.39% | 4 | 3 | 0.9620 | 2000, 909, 413, 188, 85.4, 38.8, 17.6, 8.02 | 2.2 | YES | | used plate sealer; ppt in 1X C1-C2 | SLS-B3-N040506A |
| ***ECBC*** | | | | | | | | | | | | | | | |
| AA61FV-A1 | RF | AA61FV | NA | NA | 0.421 | 99.34% | 1 | 1 | NA | 10000, 1000, 100, 10, 1, 0.1, 0.01, 0.001 | 10 | RF | range finder; % VC difference > 15 | volatility problem | SLS-P12 |

# NHK NRU Reference Substance Data

| Experiment ID NHK Cells | Assay Type[1] | Substance ID | $IC_{50}$ (ug/mL) | $IC_{50}$ (mM) | Mean VC OD[2] | Difference of right/left VC from mean VC[3] | Number of Points 0 - 50 %[4] | Number of Points 50 - 100 %[5] | $R^2$ [6] | Exposure Concentrations (ug/mL)[7] | Dilution Factor[8] | Acceptable Tests[9] | Rationale for Unacceptability | Notes | PC ID |
|---|---|---|---|---|---|---|---|---|---|---|---|---|---|---|---|
| AA61FV-B1(sealer) | DF | AA61FV | 62.8 | 0.667 | 0.622 | 8.17% | 4 | 3 | 0.9585 | 1000, 465, 216, 101, 46.8, 21.8, 10.1, 4.7 | 2.15 | YES | | | SLS-P32 |
| AA61FV-B2 (sealer) | DF | AA61FV | 78.5 | 0.834 | 0.668 | 7.31% | 3 | 4 | 0.9576 | 1000, 465, 216, 101, 46.8, 21.8, 10.1, 4.7 | 2.15 | YES | | | SLS-P34 |
| AA61FV-B3 (sealer) | DF | AA61FV | 36.1 | 0.383 | 0.318 | 2.99% | 5 | 3 | 0.9402 | 1000, 465, 216, 101, 46.8, 21.8, 10.1, 4.7 | 2.15 | YES | | | SLS-P36 |
| ***FRAME*** | | | | | | | | | | | | | | | |
| FAL.NHK.MS.A1.14.05.04 | RF | AA61MS | 91.0 | 0.967 | 0.279 | 98.26% | 3 | 0 | 0.2986 | 10000, 1000, 100, 10, 1, 0.1, 0.01, 0.001 | 10 | RF | range finder; %VC difference > 15; no pts between 50-100% | | FAL.NHK.SLS.14.05.03 |
| FAL.NHK.MS.B1.12.08.04 | DF | AA61MS | 381 | 4.049 | 0.654 | 13.72% | 1 | 2 | 0.8273 | 1000, 465, 216, 101, 46.8, 21.8, 10.1, 4.71 | 2.15 | NO | PC failed | | FAL.NHK.SLS.12.08.04 |
| FAL.NHK.MS.B2.19.08.04 (RB) | DF | AA61MS | 170 | 1.805 | 0.168 | 46.79% | 3 | 1 | 0.4991 | 1000, 465, 216, 101, 46.8, 21.8, 10.1, 4.71 | 2.15 | NO | PC failed; % VC difference > 15 | | FAL.NHK.SLS-RB.19.08.04 |
| FAL.NHK.MS-NB.B3.25.08.04 | DF | AA61MS | 86.7 | 0.921 | 1.034 | 8.73% | 4 | 3 | 0.9822 | 1000, 465, 216, 101, 46.8, 21.8, 10.1, 4.71 | 2.15 | YES | | | FAL.NHK.SLS.25.08.04 |
| FAL.NHK.MS.B4.17.09.04 | DF | AA61MS | 94.6 | 1.005 | 0.760 | 15.15% | 3 | 4 | 0.9736 | 1000, 465, 216, 101, 46.8, 21.8, 10.1, 4.71 | 2.15 | YES | | outlier removed by SD; potential volatility problem | FAL.NHK.SLS.17.09.04 |
| FAL.NHK.MS.B5.30.09.04 | DF | AA61MS | 793 | 8.421 | 0.589 | 5.43% | 1 | 0 | 0.8202 | 1000, 465, 216, 101, 46.8, 21.8, 10.1, 4.71 | 2.15 | NO | no points between 50 - 100% | SD removed data from C8 due to low OD; "roller coaster" curve | FAL.NHK.SLS.30.09.03 |
| FAL.NHK.MS.B6.07.10.04 | DF | AA61MS | 98.4 | 1.046 | 0.650 | 8.37% | 4 | 3 | 0.9794 | 1000, 465, 216, 101, 46.8, 21.8, 10.1, 4.71 | 2.15 | YES | | | FAL.NHK.SLS.07.10.03 |

## PHENYLTHIOUREA

| | | | | | | | | | | | | | | | |
|---|---|---|---|---|---|---|---|---|---|---|---|---|---|---|---|
| ***IIVS*** | | | | | | | | | | | | | | | |
| A1 | RF | AA61PV | 467 | 3.066 | 0.775 | 1.12% | 1 | 2 | 0.9466 | 1000, 100, 10, 1, 0.1, 0.01, 0.001, 0.0001 | 10 | RF | range finder | | SLS-A3-N040331A |
| B1 | DF | AA61PV | 252 | 1.658 | 0.643 | 1.48% | 5 | 3 | 0.9786 | 2500, 1389, 772, 429, 238, 132, 73.5, 40.8 | 1.8 | YES | | ppt in 2X C1 | SLS-B8-N040819A |
| B2 | DF | AA61PV | 352 | 2.321 | 0.623 | 0.41% | 4 | 4 | 0.9605 | 2500, 1389, 772, 429, 238, 132, 73.5, 40.8 | 1.8 | YES | | ppt in 2X C1 | SLS-B9-N040820A |
| B3 | DF | AA61PV | 213 | 1.401 | 0.654 | 4.04% | 5 | 3 | 0.9788 | 2500, 1389, 772, 429, 238, 132, 73.5, 40.8 | 1.8 | YES | | ppt in 2X C1-C2 | SLS-B10-N040903A |
| ***ECBC*** | | | | | | | | | | | | | | | |
| AA61LN-A1 | RF | AA61LN | 294 | 1.930 | 0.995 | 4.15% | 1 | 7 | 0.8497 | 1000, 100, 10, 1, 0.1, 0.01, 0.001, 0.0001 | 10 | RF | range finder | | SLS-P39 |
| AA61LN-B1 | DF | AA61LN | 362 | 2.380 | 0.577 | 2.20% | 3 | 2 | 0.9609 | 2000, 930, 433, 201, 93.6, 43.5, 20.3, 9.42 | 2.15 | YES | | | SLS-P41 |
| AA61LN-B2 | DF | AA61LN | 306 | 2.012 | 0.705 | 1.12% | 3 | 5 | 0.9632 | 2000, 930, 433, 201, 93.6, 43.5, 20.3, 9.42 | 2.15 | YES | | | SLS-P43 |
| AA61LN-B3 | DF | AA61LN | 422 | 2.771 | 0.972 | 5.43% | 3 | 5 | 0.9477 | 2000, 930, 433, 201, 93.6, 43.5, 20.3, 9.42 | 2.15 | YES | | ppt in 2X C1 | SLS-P45 |
| ***FRAME*** | | | | | | | | | | | | | | | |
| FAL.NHK.JB.A1.14.05.04 | RF | AA61 JB | 555 | 3.644 | 0.678 | 3.82% | 1 | 7 | 0.9193 | 1000, 100, 10, 1, 0.1, 0.01, 0.001, 0.0001 | 10 | RF | range finder | | FAL.NHK.SLS.14.05.03 |
| FAL.NHK.JB.B1.29.10.04 | DF | AA61JB | 335 | 2.201 | 0.575 | 8.89% | 3 | 5 | 0.9804 | 2500, 1163, 541, 252, 117, 54.4, 25.3, 11.8 | 2.15 | YES | | ppt in 2X C1 | FAL.NHK.SLS.29.10.04 |
| FAL.NHK.JB.B2.03.11.04 | DF | AA61JB | 373 | 2.452 | 0.526 | 0.65% | 3 | 5 | 0.9615 | 2500, 1163, 541, 252, 117, 54.4, 25.3, 11.8 | 2.15 | YES | | | FAL.NHK.SLS.03.11.04 |
| FAL.NHK.JB.B3.05.11.04 | DF | AA61JB | 495 | 3.255 | 0.371 | 11.87% | 3 | 1 | 0.8795 | 2500, 1163, 541, 252, 117, 54.4, 25.3, 11.8 | 2.15 | YES | | ppt in 2X C1 | FAL.NHK.SLS.05.11.04 |

## PHYSOSTIGMINE

| | | | | | | | | | | | | | | | |
|---|---|---|---|---|---|---|---|---|---|---|---|---|---|---|---|
| ***IIVS*** | | | | | | | | | | | | | | | |
| A1 | RF | AA61NF | 136 | 0.494 | 0.555 | 4.16% | 1 | 2 | 0.9514 | 1000, 100, 10, 1, 0.1, 0.01, 0.001, 0.0001 | 10 | RF | range finder | | SLS-A5-N040401A |
| B1 | DF | AA61NF | 146 | 0.531 | 0.647 | 3.80% | 4 | 4 | 0.9767 | 1000, 556, 309, 171, 95.3, 52.9, 29.4, 16.3 | 1.8 | YES | | | SLS-B4-N040513C |

# NHK NRU Reference Substance Data

| Experiment ID NHK Cells | Assay Type[1] | Substance ID | $IC_{50}$ (ug/mL) | $IC_{50}$ (mM) | Mean VC OD[2] | Difference of right/left VC from mean VC[3] | Number of Points 0 - 50 %[4] | Number of Points 50 - 100 %[5] | $R^2$ [6] | Exposure Concentrations (ug/mL)[7] | Dilution Factor[8] | Acceptable Tests[9] | Rationale for Unacceptability | Notes | PC ID |
|---|---|---|---|---|---|---|---|---|---|---|---|---|---|---|---|
| B2 | DF | AA61NF | 129 | 0.467 | 0.596 | 5.79% | 3 | 3 | 0.9845 | 1000, 556, 309, 171, 95.3, 52.9, 29.4, 16.3 | 1.8 | YES | | | SLS-B5-N040514B |
| B3 | DF | AA61NF | 141 | 0.511 | 0.834 | 1.84% | 3 | 4 | 0.9527 | 500, 357, 255, 182, 130, 93.0, 66.4, 47.4 | 1.4 | YES | | | SLS-B6-N040716A |
| ***ECBC*** | | | | | | | | | | | | | | | |
| AA61FT-A1 | RF | AA61FT | 123 | 0.447 | 0.863 | 2.71% | 1 | 6 | 0.9452 | 1000, 100, 10, 1, 0.1, 0.01, 0.001, 0.0001 | 10 | RF | range finder | | SLS-P38 |
| AA61FT-B1 | DF | AA61FT | 158 | 0.575 | 0.691 | 3.04% | 2 | 5 | 0.9669 | 700, 326, 151, 70.4, 32.8, 15.2, 7.09, 3.30 | 2.15 | YES | | | SLS-P41 |
| AA61FT-B2 | DF | AA61FT | 164 | 0.596 | 0.674 | 5.99% | 2 | 3 | 0.9348 | 300, 204, 139, 94.4, 64.2, 43.7, 29.7, 20.2 | 1.47 | YES | | | SLS-P43 |
| AA61FT-B3 | DF | AA61FT | 169 | 0.612 | 1.001 | 2.86% | 2 | 6 | 0.8953 | 300, 204, 139, 94.4, 64.2, 43.7, 29.7, 20.2 | 1.47 | YES | | | SLS-P45 |
| ***FRAME*** | | | | | | | | | | | | | | | |
| FAL.NHK.GT.A1.24.09.04 | RF | AA61GT | 153 | 0.555 | 0.662 | 6.01% | 1 | 1 | 0.6638 | 1000, 100, 10, 1.0, 0.1, 0.01, 0.001, 0.0001 | 10 | RF | range finder | | FAL.NHK.SLS.24.09.03 |
| FAL.NHK.GT.B1.01.10.04 | DF | AA61GT | 225 | 0.819 | 1.035 | 7.61% | 2 | 6 | 0.9354 | 1000, 465, 216, 101, 46.8, 21.8, 10.1, 4.71 | 2.15 | NO | PC failed | | FAL.NHK.SLS.01.10.04 |
| FAL.NHK.GT.B2.07.10.04 | DF | AA61GT | 107 | 0.387 | 0.508 | 1.13% | 3 | 2 | 0.9741 | 1000, 465, 216, 101, 46.8, 21.8, 10.1, 4.71 | 2.15 | NO | wrong solvent used (medium); should be DMSO; SD will retest | | FAL.NHK.SLS.07.10.03 |
| FAL.NHK.GT.B3.08.10.04 | DF | AA61GT | 157 | 0.570 | 0.695 | 5.70% | 3 | 5 | 0.9843 | 1000, 465, 216, 101, 46.8, 21.8, 10.1, 4.71 | 2.15 | NO | wrong solvent used (medium); should be DMSO; SD will retest | | FAL.NHK.SLS.08.10.03 |
| FAL.NHK.GT.B4.20.10 .04 | DF | AA61GT | 470 | 1.706 | 1.324 | 1.47% | 1 | 5 | 0.9382 | 1000, 465, 216, 101, 46.8, 21.8, 10.1, 4.71 | 2.15 | YES | | | FAL.NHK.SLS.20.10.04 |
| FAL.NHK.GT.B5.22.10.04 | DF | AA61GT | 0.366 | 0.001 | 0.767 | 7.78% | 7 | 1 | 0.9929 | 1000, 317, 101, 32.0, 10.2, 3.22, 1.02, 0.32 | 3.15 | YES | | reach 100% cytotoxicityat C7 | FAL.NHK.SLS.22.10.04 (NB) |
| FAL.NHK.GT.B6.28.10.04 | DF | AA61GT | 167 | 0.605 | 0.596 | 9.68% | 3 | 4 | 0.9740 | 1000, 465, 216, 101, 46.8, 21.8, 10.1, 4.71 | 2.15 | YES | | | FAL.NHK.SLS.28.10.04 |

## POTASSIUM I CHLORIDE

| | | | | | | | | | | | | | | | |
|---|---|---|---|---|---|---|---|---|---|---|---|---|---|---|---|
| ***IIVS*** | | | | | | | | | | | | | | | |
| A2 | RF | AA61FF | 1490 | 19.987 | 0.680 | 4.54 | 0 | 1 | 0.9413 | 10000, 1000, 100, 10, 1, 0.1, 0.01, 0.001 | 10 | RF | | | SLS-A2 |
| B1 | DF | AA61FF | 2040 | 27.364 | 0.355 | 1.41 | 4 | 4 | 0.9755 | 10000, 6667, 4444, 2963, 1975, 1317, 878, 585 | 1.5 | YES | | | SLS-B1 |
| B2 | DF | AA61FF | 2120 | 28.437 | 0.274 | 8.41 | 2 | 4 | 0.9809 | 10000, 6667, 4444, 2963, 1975, 1317, 878, 585 | 1.5 | YES | | | SLS-B2 |
| B3 | DF | AA61FF | 1810 | 24.279 | 0.295 | 8.80 | 4 | 3 | 0.984 | 10000, 6667, 4444, 2963, 1975, 1317, 878, 585 | 1.5 | YES | | | SLS-B3 |
| ***ECBC*** | | | | | | | | | | | | | | | |
| AA61KM-A1 | RF | AA61KM | 1460 | 19.584 | 0.687 | 3.96 | 1 | 6 | 0.8761 | 10000, 1000, 100, 10, 1.0, 0.1, 0.01, 0.001 | 10 | RF | | range finder | SLS-P3 |
| AA61KM-B1 | DF | AA61KM | 2650 | 35.547 | 0.949 | 0.35 | 3 | 5 | 0.9297 | 8000, 5442, 3702, 2518, 1714, 1166, 793, 539 | 1.47 | YES | | | SLS-P7 |
| AA61KM-B2 | DF | AA61KM | 2090 | 28.035 | 0.960 | 0.99 | 3 | 4 | 0.9645 | 8000, 5442, 3702, 2518, 1714, 1166, 793, 539 | 1.47 | YES | | | SLS-P9 |
| AA61KM-B3 | DF | AA61KM | 2250 | 30.181 | 0.797 | 5.97 | 3 | 4 | 0.9805 | 8000, 5442, 3702, 2518, 1714, 1166, 793, 539 | 1.47 | NO | PC failed | | SLS-P11 |
| AA61KM-B4 | DF | AA61KM | 2940 | 39.437 | 0.666 | 2.17 | 3 | 3 | 0.9170 | 8000, 5442, 3702, 2518, 1714, 1166, 793, 539 | 1.47 | YES | | | SLS-P19 |
| ***FRAME*** | | | | | | | | | | | | | | | |
| FAL.NHK.MY.A1.010803 | RF | AA61MY | 1030 | 13.816 | 0.503 | 3.16 | 0 | 6 | 0.7001 | 10000, 1000, 100, 10, 1, 0.1, 0.01, 0.001 | 10 | RF | | | FAL.NHK.SLS.010803 |
| FAL.NHK.MY.B1.080803 | DF | AA61MY | 1610 | 21.596 | 0.625 | 3.72 | 3 | 5 | 0.8175 | 5000, 3401, 2313, 1574, 1070, 728, 496, 337 | 1.47 | YES | | high background | FAL.NHK.SLS.08.08.03 |

# NHK NRU Reference Substance Data

| Experiment ID NHK Cells | Assay Type[1] | Substance ID | $IC_{50}$ (ug/mL) | $IC_{50}$ (mM) | Mean VC OD[2] | Difference of right/left VC from mean VC[3] | Number of Points 0 - 50 %[4] | Number of Points 50 - 100 %[5] | $R^2$ [6] | Exposure Concentrations (ug/mL)[7] | Dilution Factor[8] | Acceptable Tests[9] | Rationale for Unacceptability | Notes | PC ID |
|---|---|---|---|---|---|---|---|---|---|---|---|---|---|---|---|
| FAL.NHK.MY.B2.15.08.03 | DF | AA61MY | 4760 | 63.850 | 0.250 | 36.21 | 1 | 2 | 0.2925 | 5000, 3401, 2313, 1574, 1070, 728, 496, 337 | 1.47 | NO | % VC difference >15; low r2 | | FAL.NHK.SLS.15.08.03 |
| FAL.NHK.MY.B3.23.08.03 | DF | AA61MY | 1880 | 25.218 | 0.554 | 7.67 | 2 | 6 | 0.7555 | 5000, 3401, 2313, 1574, 1070, 728, 496, 337 | 1.47 | NO | PC failed | | FAL.NHK.SLS.230803 |
| FAL.NHK.MY.B4.28.08.04 | DF | AA61MY | 2860 | 38.364 | 0.385 | 5.19 | 2 | 6 | 0.8496 | 5000, 3401, 2313, 1574, 1070, 728, 496, 337 | 1.47 | YES | | | FAL.NHK.SLS.280803 |
| FAL.NHK.MY.B5.05.09.03 | DF | AA61MY | NA | NA | 0.113 | NA | NA | NA | NA | 10000, 4651, 2163, 1006, 468, 218, 101, 47.1 | 2.15 | NO | | curve going in wrong direction; plate reversed 180 degrees when reading? | FAL.NHK.SLS.050903 |
| FAL.NHK.MY.B5.15.10.03 (should be B6?) | DF | AA61MY | 2390 | 32.059 | 0.482 | 3.11 | 1 | 6 | 0.8444 | 5000, 2326, 1082, 503, 234, 109, 50.6, 23.5 | 2.15 | YES | | | FAL.NHK.SLS.15.10.03 |

## POTASSIUM CYANIDE

| | | | | | | | | | | | | | | | |
|---|---|---|---|---|---|---|---|---|---|---|---|---|---|---|---|
| ***IIVS*** | | | | | | | | | | | | | | | |
| A1 | RF | AA61KW | 0.0006 | 0.00001 | 0.173 | 100.39% | 3 | 0 | 0.7469 | 10000, 1000, 100, 10, 1, 0.1, 0.01, 0.001 | 10 | RF | range finder; no points between 50 - 100%; % VC difference > 15 | volatility problem; VC1 OD values much lower than VC2; VC1 removed from subsequent analysis bySD | SLS-A5-N040401A |
| B1 | DF | AA61KW | NA | NA | 0.656 | 2.12% | 0 | 1 | NA | 0.100, 0.045, 0.021, 0.0094, 0.0043, 0.0019, 0.00088, 0.00040 | 2.2 | NO | no points between 0 - 50% | used plate sealer; induced shift in response | SLS-B4-N040513C |
| B2 | DF | AA61KW | NA | NA | 0.541 | 1.12% | 0 | 0 | NA | 0.100, 0.045, 0.021, 0.0094, 0.0043, 0.0019, 0.00088, 0.00040 | 2.2 | NO | no points between 0 - 100% | no toxicity detected | SLS-B5-N040514B |
| B3 | DF | AA61KW | 19.2 | 0.295 | 0.670 | 0.68% | 3 | 3 | 0.9761 | 100, 45.5, 20.7, 9.39, 4.27, 1.94, 0.882, 0.401 | 2.2 | YES | | | SLS-B6-N040716A |
| B4 | DF | AA61KW | 16.6 | 0.255 | 0.613 | 5.27% | 3 | 3 | 0.9799 | 100, 45.5, 20.7, 9.39, 4.27, 1.94, 0.882, 0.401 | 2.2 | YES | | | SLS-B7-N040717B |
| B5 | DF | AA61KW | 14.8 | 0.227 | 0.584 | 5.68% | 3 | 3 | 0.9770 | 100, 45.5, 20.7, 9.39, 4.27, 1.94, 0.882, 0.401 | 2.2 | YES | | | SLS-B8-N040819A |
| ***ECBC*** | | | | | | | | | | | | | | | |
| AA61MN-A1 | RF | AA61MN | NA | NA | 0.017 | 103.07% | 4 | 0 | NA | 10000, 1000, 100, 10, 1, 0.1, 0.01, 0.001 | 10 | RF | range finder; no ponts between 50 - 100%; % VC difference > 15 | | SLS-P38 |
| AA61MN-A2 (sealer) | RF | AA61MN | 15.3 | 0.235 | 0.758 | 2.90% | 2 | 3 | 0.9585 | 1000, 100, 10, 1, 0.1, 0.01, 0.001, 0.0001 | 10 | RF | range finder | | SLS-P44 |
| AA61MN-B1 (sealer) | DF | AA61MN | 36.1 | 0.554 | 0.744 | 0.85% | 3 | 4 | 0.9264 | 300, 140, 64.9, 30.2, 14.0, 6.53, 3.04, 1.41 | 2.15 | YES | | | SLS-P46 |
| AA61MN-B2 (sealer) | DF | AA61MN | 29.4 | 0.452 | 0.939 | 0.10% | 3 | 5 | 0.8814 | 300, 140, 64.9, 30.2, 14.0, 6.53, 3.04, 1.41 | 2.15 | YES | | | SLS-P50 |
| AA61MN-B3 (sealer) | DF | AA61MN | 22.3 | 0.342 | 0.498 | 4.97% | 3 | 2 | 0.9697 | 300, 140, 64.9, 30.2, 14.0, 6.53, 3.04, 1.41 | 2.15 | YES | | | SLS-P52 |
| ***FRAME*** | | | | | | | | | | | | | | | |
| FAL.NHK.GP.A1.24.09.04 | RF | AA61GP | NA | NA | 0.005 | 87.41% | 0 | 0 | -0.0679 | 10000, 1000, 100, 10, 1.0, 0.1, 0.01, 0.001 | 10 | RF | range finder | | FAL.NHK.SLS.24.09.03 |
| FAL.NHK.GP.B1.01.10.04 | DF | AA61GP | 4.07 | 0.062 | 1.025 | 7.20% | 0 | 6 | 0.2038 | 0.100, 0.0465, 0.0216, 0.0101, 0.0047, 0.0022, 0.0010, 0.0005 | 2.15 | NO | PC failed; no points between 0-50% | | FAL.NHK.SLS.01.10.04 |
| FAL.NHK.B2.07.10.04 | DF | AA61GP | 16.4 | 0.251 | 0.331 | 40.76% | 6 | 1 | 0.8792 | 5000, 1587, 504, 160, 50.8, 16.1, 5.12, 1.62 | 3.15 | NO | %VC difference >15 | volatility problems | FAL.NHK.SLS.07.10.03 |
| FAL.NHK.GP.B3.20.10 .04 | DF | AA61GP | NA | NA | 1.150 | 0.46% | 0 | 0 | NA | 500, 232, 108, 50.3, 23.9, 10.4, 5.06, 2.35 | 2.15 | NO | no points between 0-100% | | FAL.NHK.SLS.20.10.04 |
| FAL.NHK.GP.B4.11.11.04 | DF | AA61GP | NA | NA | 0.679 | 9.53% | 6 | 0 | NA | 2000, 1361, 926, 630, 428, 291,198,135 | 1.47 | NO | no points between 50-100% | all concentrations were toxic | FAL.NHK.SLS.10.11.04 |
| FAL.NHK.GP.B5.17.11.04 | DF | AA61GP | 71.9 | 1.105 | 0.622 | 22.40% | 5 | 0 | 0.9016 | 1000, 680, 463, 315, 214, 146, 99.1, 67.4 | 1.47 | NO | no points between 50-100%; %VC difference >15 | outlier removed bySD | FAL.NHK.SLS.17.11.04 |
| FAL.NHK.GP.B6.24.11.04 | DF | AA61GP | 53.2 | 0.817 | 0.906 | 10.92% | 3 | 4 | 0.9588 | 500, 232, 108, 50.3, 23.9, 10.4, 5.06, 2.35 | 2.15 | YES | | | FAL.NHK.SLS.24.11.04 |
| FAL.NHK.GP.B7.26.11.04 | DF | AA61GP | 11.9 | 0.182 | 0.460 | 1.72% | 3 | 3 | 0.9363 | 500, 232, 108, 50.3, 23.9, 10.4, 5.06, 2.35 | 2.15 | YES | | | FAL.NHK.SLS.26.11.04 |

# NHK NRU Reference Substance Data

| Experiment ID NHK Cells | Assay Type[1] | Substance ID | $IC_{50}$ (ug/mL) | $IC_{50}$ (mM) | Mean VC OD[2] | Difference of right/left VC from mean VC[3] | Number of Points 0 - 50 %[4] | Number of Points 50 - 100 %[5] | $R^2$ [6] | Exposure Concentrations (ug/mL)[7] | Dilution Factor[8] | Acceptable Tests[9] | Rationale for Unacceptability | Notes | PC ID |
|---|---|---|---|---|---|---|---|---|---|---|---|---|---|---|---|
| FAL.NHK.GP.B8.10.12.04 | DF | AA61GP | 202 | 3.107 | 0.993 | 1.92% | 1 | 7 | 0.9318 | 500, 232, 108, 50.3, 23.9, 10.4, 5.06, 2.35 | 2.15 | YES | | SD has little confidence in values due to chem. volatility & interaction with plate sealer | FAL.NHK.SLS(MO).10.12.04 |
| FAL.NHK.GP.B9.10.12.04 | DF | AA61GP | 31.6 | 0.484 | 0.903 | 1.34% | 2 | 3 | 0.9469 | 500, 232, 108, 50.3, 23.9, 10.4, 5.06, 2.35 | 2.15 | NO | PC failed | SD has little confidence in values due to chem. volatility & interaction with plate sealer | FAL.NHK.SLS.10.12.04 |
| **PROCAINAMIDE HCL** | | | | | | | | | | | | | | | |
| ***IIVS*** | | | | | | | | | | | | | | | |
| A1 | RF | AA61ML | 3890 | 14.314 | 0.499 | 3.99% | 0 | 0 | 0.9391 | 10000, 1000, 100, 10, 1, 0.1, 0.01, 0.001 | 10 | RF | range finder; no points between 0 - 100% | | SLS-A4-N040331N |
| B1 | DF | AA61ML | 2210 | 8.143 | 0.558 | 0.88% | 3 | 2 | 0.9836 | 10000, 7519, 5653, 4251, 3196, 2403, 1807, 1358 | 1.33 | YES | | | SLS-B4-N040513C |
| B2 | DF | AA61ML | 1770 | 6.498 | 0.510 | 6.82% | 4 | 1 | 0.8603 | 10000, 7519, 5653, 4251, 3196, 2403, 1807, 1358 | 1.33 | YES | | | SLS-B5-N040514B |
| B3 | DF | AA61ML | 2100 | 7.740 | 0.694 | 1.43% | 3 | 2 | 0.9920 | 10000, 7519, 5653, 4251, 3196, 2403, 1807, 1358 | 1.33 | YES | | | SLS-B6-N040716A |
| ***ECBC*** | | | | | | | | | | | | | | | |
| AA61KC-A1 | RF | AA61KC | 5120 | 18.826 | 0.703 | 1.72% | 0 | 4 | 0.9439 | 10000, 1000, 100, 10, 1, 0.1, 0.01, 0.001 | 10 | RF | range finder; no points between 0 - 50% | | SLS-P18 |
| AA61KC-B1 | DF | AA61KC | 1380 | 5.091 | 0.752 | 4.76% | 5 | 2 | 0.9773 | 10000, 6803, 4628, 3148, 2142, 1457, 991, 674 | 1.47 | YES | | | SLS-P32 |
| AA61KC-B2 | DF | AA61KC | 1350 | 4.963 | 0.410 | 2.83% | 4 | 2 | 0.9664 | 5000, 3401, 2314, 1574, 1071, 728, 496, 337 | 1.47 | YES | | | SLS-P37 |
| AA61KC-B3 | DF | AA61KC | 1710 | 6.277 | 0.647 | 0.26% | 2 | 4 | 0.9710 | 5000, 3401, 2314, 1574, 1071, 728, 496, 337 | 1.47 | YES | | | SLS-P38 |
| ***FRAME*** | | | | | | | | | | | | | | | |
| FAL.NHK.GV.A1.28.07.04 | RF | AA61GV | 1330 | 4.884 | 0.055 | 6.80% | 1 | 1 | 0.6423 | 10000, 1000, 100, 10, 1, 0.1, 0.01, 0.001 | 10 | RF | range finder | | FAL.NHK.SLS.28.07.04 |
| FAL.NHK.GV.B1.11.08.04 | DF | AA61GV | 1730 | 6.365 | 0.464 | 0.97% | 1 | 1 | 0.9180 | 10000, 4651, 2163, 1006, 468, 218, 101, 47 | 2.15 | YES | | | FAL.NHK.SLS.11.08.04 |
| FAL.NHK.GV.B2.17.09.04 | DF | AA61GV | 2030 | 7.478 | 0.775 | 4.46% | 2 | 1 | 0.9417 | 5000, 3401, 2314, 1574, 1071, 728, 496, 337 | 1.47 | YES | | | FAL.NHK.SLS.17.09.04 |
| FAL.NHK.GV.B3.07.10.04 | DF | AA61GV | 1600 | 5.885 | 0.613 | 7.61% | 3 | 3 | 0.9809 | 5000, 3401, 2314, 1574, 1071, 728, 496, 337 | 1.47 | YES | | | FAL.NHK.SLS.07.10.03 |
| **2-PROPANOL** | | | | | | | | | | | | | | | |
| ***IIVS*** | | | | | | | | | | | | | | | |
| A2 | RF | AA61GC | 28100 | 467.554 | 0.731 | 5.06 | 0 | 4 | 0.6596 | 10000, 1000, 100, 10, 1, 0.1, 0.01, 0.001 | 10 | RF | range finder | | SLS-A2 |
| A2 with plate cover | RF | AA61GC | 9820 | 163.394 | 0.556 | 2.40 | 1 | 1 | 0.8691 | 10000, 1000, 100, 10, 1, 0.1, 0.01, 0.001 | 10 | RF | range finder | | SLS-A3 |
| B1 | DF | AA61GC | 15100 | 251.248 | 0.296 | 20.61 | 2 | 4 | 0.8006 | 20000, 14286, 10204, 7289, 5206, 3719, 2656, 1897 | 1.4 | NO | VC difference > 15% | | SLS-B1 |
| B1 with plate cover | DF | AA61GC | 6610 | 109.983 | 0.316 | 4.51 | 3 | 3 | 0.9817 | 20000, 14286, 10204, 7289, 5206, 3719, 2656, 1897 | 1.4 | YES | | | SLS-B1 |
| B2 | DF | AA61GC | 13600 | 226.290 | 0.233 | 23.35 | 2 | 4 | 0.8 | 20000, 14286, 10204, 7289, 5206, 3719, 2656, 1897 | 1.4 | NO | VC difference > 15% | | SLS-B2 |
| B2 with plate cover | DF | AA61GC | 7570 | 125.957 | 0.243 | 9.58 | 2 | 3 | 0.9695 | 20000, 14286, 10204, 7289, 5206, 3719, 2656, 1897 | 1.4 | YES | | | SLS-B2 |

# NHK NRU Reference Substance Data

| Experiment ID NHK Cells | Assay Type[1] | Substance ID | $IC_{50}$ (ug/mL) | $IC_{50}$ (mM) | Mean VC OD[2] | Difference of right/left VC from mean VC[3] | Number of Points 0 - 50 %[4] | Number of Points 50 - 100 %[5] | $R^2$ [6] | Exposure Concentrations (ug/mL)[7] | Dilution Factor[8] | Acceptable Tests[9] | Rationale for Unacceptability | Notes | PC ID |
|---|---|---|---|---|---|---|---|---|---|---|---|---|---|---|---|
| B3 | DF | AA61GC | 19200 | 319.468 | 0.25 | 26.08 | 0 | 5 | 0.617 | 20000, 14286, 10204, 7289, 5206, 3719, 2656, 1897 | 1.4 | NO | VC difference > 15%; no points 50-100%; low R2 | | SLS-B3 |
| B3 with plate cover | DF | AA61GC | 7080 | 117.804 | 0.313 | 3.69 | 4 | 4 | 0.9821 | 20000, 14286, 10204, 7289, 5206, 3719, 2656, 1897 | 1.4 | YES | | | SLS-B3 |
| ***ECBC*** | | | | | | | | | | | | | | | |
| AA61JL-A1 | RF | AA61JL | NA | NA | 0.726 | 0.28 | 0 | 5 | NA | 10000, 1000, 100, 10, 1.0, 0.1, 0.01, 0.001 | 10 | RF | no points between 0.1 - 50%; no r2 nor ICx values could be calculated | range finder | SLS-P2 |
| AA61JL-B1 | DF | AA61JL | NA | NA | 0.457 | 63.96 | 6 | 1 | NA | 50000, 34014, 23139, 15740, 10707, 7284, 4955, 3370 | 1.47 | NO | %VC difference > 15; no r2 nor ICx values could be calculated | Volatility of largest conc contaminated VC & others | SLS-P9 |
| AA61JL-B2 | DF | AA61JL | NA | NA | 0.554 | 35.73 | 4 | 2 | NA | 50000, 34014, 23139, 15740, 10707, 7284, 4955, 3370 | 1.47 | NO | PC failed; %VC difference > 15; no r2 nor ICx values could be calculated; | Volatility of largest conc contaminated VC & others | SLS-P11 |
| AA61JL-B3 sealer | DF | AA61JL | 4610 | 76.705 | 0.646 | 7.33 | 3 | 4 | 0.9280 | 20000, 13605, 9255, 6296, 4283, 2914, 1982, 1348 | 1.47 | YES | | | SLS-P12 |
| AA61JL-B4 sealer | DF | AA61JL | 5450 | 90.682 | 0.480 | 2.76 | 2 | 5 | 0.8957 | 20000, 13605, 9255, 6296, 4283, 2914, 1982, 1348 | 1.47 | YES | | | SLS-P18 |
| AA61JL-B5 sealer | DF | AA61JL | 5730 | 95.341 | 0.582 | 1.85 | 4 | 3 | 0.9429 | 20000, 13605, 9255, 6296, 4283, 2914, 1982, 1348 | 1.47 | YES | | | SLS-P19 |
| ***FRAME*** | | | | | | | | | | | | | | | |
| FAL.NHK.NG.A1.30.07.03 | RF | AA61NG | NA | NA | 1.332 | 1.06 | 0 | 7 | 0.3849 | 10000, 1000, 100, 10, 1, 0.1, 0.01, 0.001 | 10 | RF | range finder; no points between 0.1 - 50% | Little toxicity | FAL.NHK.SLS.30.07.03 |
| FAL.NHK.NG.B1.07.08.03 | DF | AA61NG | 1220 | 20.300 | 0.400 | 5.06 | 3 | 5 | 0.1851 | 10000, 6802, 4628, 3148, 2142, 1457, 991, 674.1 | 1.47 | NO | low r2 | SD wonders if chemical is a mitotic inhibitor | FAL.NHK.SLS.07.08.03 |
| FAL.NHK.NG.B2.15.08.03 | DF | AA61NG | 2390 | 39.767 | 0.474 | 3.95 | 2 | 1 | 0.6756 | 10000, 1000, 100, 10, 1, 0.1, 0.01, 0.001 | 10 | NO | low r2 | | FAL.NHK.SLS.15.08.03 |
| FAL.NHK.NG.B4.05.09.03 (plate sealer) | DF | AA61NG | 21800 | 362.729 | 0.129 | 15.55 | 1 | 3 | 0.7750 | 10000, 1000, 100, 10, 1, 0.1, 0.01, 0.001 | 10 | NO | % VC difference >15 | SD provided revised file to correct data entry error | FAL.NHK.SLS.050903 |
| FAL.NHK.NG.B5.15.10.03 plate sealer and mineral oil | DF | AA61NG | 7460 | 124.126 | 0.624 | 3.14 | 1 | 5 | 0.6032 | 10000, 1000, 100, 10, 1, 0.1, 0.01, 0.001 | 10 | NO | RF format; low r2 | | FAL.NHK.SLS.15.10.03 |
| FAL.NHK.NG.B6.19.10.03 plate sealer | DF | AA61NG | 5850 | 97.338 | 0.262 | 19.17 | 4 | 3 | 0.9245 | 20000, 13605, 9255, 6296, 4283, 2914, 1982, 1348 | 1.47 | NO | % VC difference >15 | | FAL.NHK.SLS.19.10.03 |
| FAL.NHK.NG.B6.19.10.03 mineral oil | DF | AA61NG | 5020 | 83.527 | 0.182 | 3.99 | 1 | 4 | 0.7943 | 20000, 13605, 9255, 6296, 4283, 2914, 1982, 1348 | 1.47 | NO | Mineral oil | experimental | FAL.NHK.SLS.19.10.03 |
| FAL.NHK.NG.B7.23.10.03 plate sealer | DF | AA61NG | 2410 | 40.100 | 0.236 | 9.93 | 4 | 4 | 0.6362 | 20000, 9302, 4327, 2012, 936, 435, 202, 94 | 2.15 | NO | low r2 | | FAL.NHK.SLS.23.10.03 |
| FAL.NHK.NG.B7.23.10.03 mineral oil | DF | AA61NG | 4710 | 78.369 | 0.251 | 8.11 | 3 | 3 | 0.5306 | 20000, 9302, 4327, 2012, 936, 435, 202, 94 | 2.15 | NO | low r2 | | FAL.NHK.SLS.23.10.03 |
| FAL.NHK.NG.B8.24.10.03 plate sealer | DF | AA61NG | 5220 | 86.855 | 0.622 | 0.92 | 2 | 3 | 0.8150 | 20000, 9302, 4327, 2012, 936, 435, 202, 94 | 2.15 | YES | | | FAL.NHK.SLS.24.10.03 |
| FAL.NHK.NG.B8.24.10.03 mineral oil | DF | AA61NG | 4730 | 78.702 | 0.709 | 2.74 | 2 | 4 | 0.7880 | 20000, 9302, 4327, 2012, 936, 435, 202, 94 | 2.15 | NO | low r2; Mineral oil | experimental | FAL.NHK.SLS.24.10.03 |
| FAL.NHK.NG.B9.05.11.03ps plate sealer | DF | AA61NG | 4590 | 76.373 | 0.561 | 4.88 | 2 | 1 | 0.8354 | 10000, 4651, 2163, 1006, 468, 218, 101, 47.1 | 2.15 | YES | | | FAL.NHK.SLS.05.11.03 (revised by study director) |
| FAL.NHK.NG.B9.05.11.03 min oil (mineral oil) | DF | AA61NG | 4480 | 74.542 | 0.564 | 20.01 | 2 | 2 | 0.7822 | 10000, 4651, 2163, 1006, 468, 218, 101, 47.1 | 2.15 | NO | low r2; VC difference >15%; Mineral oil | experimental | FAL.NHK.SLS.05.11.03 (revised by study director) |
| FAL.NHK.NG.B10.07.11.03Ps plate sealer | DF | AA61NG | 3010 | 50.083 | 0.243 | 1.37 | 3 | 1 | 0.7256 | 20000, 9302, 4327, 2012, 936, 435, 202, 94 | 2.15 | YES | | challenging chemical; SMT accepts this test | FAL.NHK.SLS.07.11.03 |

# NHK NRU Reference Substance Data

| Experiment ID NHK Cells | Assay Type[1] | Substance ID | $IC_{50}$ (ug/mL) | $IC_{50}$ (mM) | Mean VC OD[2] | Difference of right/left VC from mean VC[3] | Number of Points 0 - 50 %[4] | Number of Points 50 - 100 %[5] | $R^2$ [6] | Exposure Concentrations (ug/mL)[7] | Dilution Factor[8] | Acceptable Tests[9] | Rationale for Unacceptability | Notes | PC ID |
|---|---|---|---|---|---|---|---|---|---|---|---|---|---|---|---|
| FAL.NHK.NG.B10.07.11.03.mo (mineral oil) | DF | AA61NG | 2610 | 43.428 | 0.270 | 5.07 | 2 | 1 | 0.8214 | 20000, 9302, 4327, 2012, 936, 435, 202, 94 | 2.15 | NO | Mineral oil | experimental | FAL.NHK.SLS.07.11.03 |
| **PROPRANOLOL** | | | | | | | | | | | | | | | |
| ***IIVS*** | | | | | | | | | | | | | | | |
| Preliminary | RF | AA61GU | 23.1 | 0.078 | 0.606 | 4.44% | 0 | 0 | 0.9617 | 1000, 100, 10, 1, 0.1, 0.01, 0.001, 0.0001 | | RF | range finder | | Preliminary |
| B1 | DF | AA61GU | 29.6 | 0.100 | 0.582 | 4.61% | 2 | 1 | 0.9576 | 100, 56.3, 31.6, 17.8, 10.0, 5.6, 3.2, 1.8 | | YES | | | SLS-B1 |
| B2 | DF | AA61GU | 26.9 | 0.091 | 0.764 | 0.61% | 2 | 2 | 0.9790 | 100, 56.3, 31.6, 17.8, 10.0, 5.6, 3.2, 1.8 | | YES | | | SLS-B2 |
| B3 | DF | AA61GU | 25.2 | 0.085 | 1.001 | 0.94% | 2 | 4 | 0.9652 | 100, 56.3, 31.6, 17.8, 10.0, 5.6, 3.2, 1.8 | | YES | | | SLS-B3 |
| B4 | DF | AA61GU | 32.7 | 0.111 | 0.907 | 4.02% | 1 | 2 | 0.9864 | 100, 56.3, 31.6, 17.8, 10.0, 5.6, 3.2, 1.8 | | YES | | | SLS-B4 |
| ***ECBC*** | | | | | | | | | | | | | | | |
| ECBC-NHK-Ib-01 AA61KH-A1 | RF | AA61KH | 15.8 | 0.053 | 1.006 | 0.13% | 0 | 2 | 0.9629 | 1000, 100, 10, 1, 0.1, 0.01, 0.001, 0.0001 | | RF | range finder | | SLS-P1 |
| ECBC-NHK-Ib-02 AA61KH-B1 | DF | AA61KH | 33.1 | 0.112 | 1.153 | 0.37% | 1 | 3 | 0.9724 | 100, 68.0, 46.3, 31.5, 21.4, 14.6, 9.91, 6.74 | | YES | | | SLS-P3 |
| ECBC-NHK-Ib-03 AA61KH-B2 | DF | AA61KH | 40.1 | 0.136 | 1.216 | 7.40% | 2 | 1 | 0.9856 | 100, 68.0, 46.3, 31.5, 21.4, 14.6, 9.91, 6.74 | | YES | | | SLS-P4 |
| ECBC-NHK-Ib-04 AA61KH-B3 | DF | AA61KH | 41.6 | 0.141 | 1.153 | 5.14% | 2 | 1 | 0.9683 | 100, 68.0, 46.3, 31.5, 21.4, 14.6, 9.91, 6.74 | | YES | | | SLS-P5 |
| ***FRAME*** | | | | | | | | | | | | | | | |
| A1 1b/NHKRF1b/FAL/NM | RF | AA61NM | 3.53 | 0.012 | 0.149 | 7.05% | 0 | 3 | 0.8056 | 100, 20, 4, 0.8, 0.16, 0.032, 0.0064, 0.00128 | 5 | RF | range finder | | A1 1b/NHKCTR1/FAL/SLS |
| A2 1b/NHKRF2/FAL/NM | RF | AA61NM | 8.66 | 0.029 | 0.475 | 9.32% | 1 | 2 | 0.8193 | 100, 68.02, 46.27, 31.47, 21.40, 14.50, 9.90, 6.70 | 1.47 | RF | range finder | | A2 1b/NHKCTR2/FAL/SLS |
| A3 1b/NHK/DF2/FAL/NM | DF | AA61NM | 24.4 | 0.082 | 0.042 | 11.04% | 0 | 2 | 0.3257 | 30, 20.4, 13.8, 9.4, 6.42, 4.37, 2.97, 2.02 | 1.47 | NO | No point between 10 & 50%; $R^2$ < 0.8; PC failed | NR crystal problems; used medium not normally used; removing outlier doesn't significantly improve R2 | A3 1b/NHK/CTR4/FAL/ |
| A4 1b/NHK/DF3/FAL/NM | DF | AA61NM | 1.22 | 0.004 | 0.140 | 15.20% | 0 | 4 | 0.0680 | 30, 20.4, 13.8, 9.4, 6.42, 4.37, 2.97, 2.02 | 1.47 | NO | No point between 10 & 50% viability; $R^2$ < 0.8 | NR crystal problems; used medium not normally used | A4 1b/NHK/CTR5/FAL |
| A5 1b/NHK/DF4/FAL/NM | DF | AA61NM | NA | NA | 0.008 | 9.78% | 0 | 0 | NC | 30, 20.4, 13.8, 9.4, 6.42, 4.37, 2.97, 2.02 | 1.47 | NO | No points between 10 & 90%; no $R^2$ or ICx; PC failed | NR crystal problems; used medium not normally used; OD values of test wells no different than the background ODs; negative values for VC | A5 1b/NHK/CTR6/FAL |
| A6 1b/NHK/DF5/FAL/NM recalculated w/o outliers | DF | AA61NM | 54.0 | 0.183 | 1.686 | 2.60% | 0 | 8 | 0.7186 | 30, 20.4, 13.8, 9.4, 6.42, 4.37, 2.97, 2.02 | 1.47 | NO | No point between 10 & 50%; $R^2$ < 0.8 | removed two outliers; didn't reach IC50 | A6 1b/NHK/CTR7/FAL |
| A8 1b/NHK/DF7/FAL/NM | DF | AA61NM | NA | NA | 1.045 | 2.91% | 0 | 5 | NC | 50, 34.01, 23.13, 15.74, 10.70, 7.28, 4.95,3.36 | 1.47 | NO | No point between 10 & 50%; no $R^2$ or ICx | PRISM couldn't do calculations; didn't reach IC50; recalc w/o outliers didn't improve curve fit, so they have not been removed | A8 1b/NHK/CTR9/FAL |
| A9 1b/NHK/DF8/FAL/NM | DF | AA61NM | 3.21 | 0.011 | 1.026 | 25.70% | 0 | 4 | 0.1476 | 50, 34.01, 23.13, 15.74, 10.70, 7.28, 4.95,3.36 | 1.47 | NO | VC difference > 15%; no point between 10 & 50%; $R^2$ < 0.8; PC failed | U-shaped dose-response | A9 1b/NHK/CTR10/FAL |
| A10 1b/NHK/DF9/FAL/NM | DF | AA61NM | 42.8 | 0.145 | 0.954 | 2.32% | 1 | 3 | 0.5573 | 350, 238.1, 162.0, 110.2, 75.0, 51.0, 34.7, 23.6 | 1.47 | NO | $R^2$ < 0.8 | no outliers; nonmonotonic response | A10 1b/NHK/CTR11/FAL |
| A11 1b/NHK/DF10/FAL/NM | DF | AA61NM | 46.5 | 0.157 | 1.280 | 0.27% | 1 | 2 | 0.8686 | 350, 238.1, 162.0, 110.2, 75.0, 51.0, 34.7, 23.6 | 1.47 | YES | | removed 3 outliers | A11 1b/NHK/CTR12/FAL |
| A12 1b/NHK/DG11/FAL/NM | DF | AA61NM | 26.0 | 0.088 | 0.539 | 6.14% | 3 | 0 | 0.8391 | 350, 238.1, 162.0, 110.2, 75.0, 51.0, 34.7, 23.6 | 1.47 | NO | No point between 50 & 90% | | A12 1b/NHK/CTR13/FAL/SLS |

# NHK NRU Reference Substance Data

| Experiment ID NHK Cells | Assay Type[1] | Substance ID | $IC_{50}$ (ug/mL) | $IC_{50}$ (mM) | Mean VC OD[2] | Difference of right/left VC from mean VC[3] | Number of Points 0 - 50 %[4] | Number of Points 50 - 100 %[5] | $R^2$ [6] | Exposure Concentrations (ug/mL)[7] | Dilution Factor[8] | Acceptable Tests[9] | Rationale for Unacceptability | Notes | PC ID |
|---|---|---|---|---|---|---|---|---|---|---|---|---|---|---|---|
| 1b/NHK/DF12/FAL/NM | DF | AA61NM | 43.4 | 0.147 | 0.650 | 5.04% | 1 | 2 | 0.9265 | 350, 238.1, 162.0, 110.2, 75.0, 51.0, 34.7, 23.6 | 1.47 | YES | | | 1b/NHK/CTR14/FAL/SLS |
| 1b/NHK/DF13/FAL/NM | DF | AA61NM | 41.5 | 0.140 | 0.897 | 2.57% | 2 | 2 | 0.9555 | 350, 238.1, 162.0, 110.2, 75.0, 51.0, 34.7, 23.6 | 1.47 | YES | | | 1b/NHK/CTR15/FAL/SLS |
| **PROPYLPARABEN** | | | | | | | | | | | | | | | |
| ***IIVS*** | | | | | | | | | | | | | | | |
| A1 | RF | AA61PX | 15.0 | 0.083 | 0.719 | 1.51% | 2 | 2 | 0.9878 | 1000, 100, 10, 1, 0.1, 0.01, 0.001, 0.0001 | 10 | RF | range finder | | SLS-A2-N040320B |
| B1 | DF | AA61PX | 13.4 | 0.075 | 0.631 | 1.14% | 5 | 3 | 0.9849 | 200, 111, 61.7, 34.3, 19.1, 10.6, 5.88, 3.27 | 1.8 | YES | | | SLS-B1-N040423A |
| B2 | DF | AA61PX | 15.2 | 0.085 | 0.664 | 3.40% | 5 | 3 | 0.9935 | 200, 111, 61.7, 34.3, 19.1, 10.6, 5.88, 3.27 | 1.8 | YES | | | SLS-B2-N040424A |
| B3 | DF | AA61PX | 12.9 | 0.072 | 0.512 | 1.92% | 4 | 3 | 0.9841 | 200, 111, 61.7, 34.3, 19.1, 10.6, 5.88, 3.27 | 1.8 | YES | | | SLS-B3-N040506A |
| ***ECBC*** | | | | | | | | | | | | | | | |
| AA61PK-A1 | RF | AA61PK | 14.8 | 0.082 | 0.534 | 9.07% | 2 | 1 | 0.8856 | 1000, 100, 10, 1, 0.1, 0.01, 0.001, 0.0001 | 10 | RF | range finder | ppt in 2X C1 and 1X C1 | SLS-P5 |
| AA61PK-B1 | DF | AA61PK | 20.7 | 0.115 | 0.960 | 0.09% | 4 | 4 | 0.9856 | 300, 140, 64.9, 30.2, 14.0, 6.53, 3.04, 1.41 | 2.15 | YES | | | SLS-P27 |
| AA61PK-B2 | DF | AA61PK | 15.9 | 0.088 | 1.059 | 0.57% | 4 | 4 | 0.9647 | 300, 140, 64.9, 30.2, 14.0, 6.53, 3.04, 1.41 | 2.15 | YES | | | SLS-P29 |
| AA61PK-B3 | DF | AA61PK | 17.7 | 0.098 | 0.760 | 0.66% | 4 | 4 | 0.9877 | 300, 140, 64.9, 30.2, 14.0, 6.53, 3.04, 1.41 | 2.15 | YES | | | SLS-P30 |
| ***FRAME*** | | | | | | | | | | | | | | | |
| FAL.NHK.HT.A1.26.03.04 | RF | AA61HT | 23.4 | 0.130 | 0.486 | 8.29% | 2 | 2 | 0.7353 | 1000, 100, 10, 1, 0.1, 0.01, 0.001, 0.0001 | 10 | RF | range finder | | FAL.NHK.SLS.26.03.04 |
| FAL.NHK.HT.A2.25.04.04 | RF | AA61HT | NA | NA | 0.729 | 50.05% | 2 | 2 | NA | 1000, 100, 10, 1, 0.1, 0.01, 0.001, 0.0001 | 10 | RF | range finder; wrong desorb solution used in NRU; SD rejects test | same application date and PC as HT A1 | FAL.NHK.SLS.26.03.04 |
| FAL.NHK.HT.B1.28.04.04 | DF | AA61HT | 20.4 | 0.113 | 1.018 | 5.66% | 2 | 3 | 0.9749 | 100, 46.5, 21.6, 10.1, 4.68, 2.18, 1.01, 0.47 | 2.15 | YES | | | FAL.NHK.SLS.28.04.03 |
| FAL.NHK.HT.B2.11.06.04 | DF | AA61HT | 10.7 | 0.060 | 0.892 | 2.02% | 4 | 4 | 0.9211 | 100, 46.5, 21.6, 10.1, 4.68, 2.18, 1.01, 0.47 | 2.15 | NO | PC failed | | FAL.NHK.SLS.11.06.04 |
| FAL.NHK.HT.B3.23.06.04 | DF | AA61HT | NA | NA | 0.521 | 99.17% | NA | NA | NA | 100, 46.5, 21.6, 10.1, 4.68, 2.18, 1.01, 0.47 | 2.15 | NO | % VC difference > 15 | no cells in VC2; no PRISM file | FAL.NHK.SLS.23.06.04 |
| FAL.NHK.HT.B4.25.06.04 | DF | AA61HT | 15.3 | 0.085 | 1.063 | 4.00% | 3 | 5 | 0.9548 | 100, 46.5, 21.6, 10.1, 4.68, 2.18, 1.01, 0.47 | 2.15 | YES | | | FAL.NHK.SLS.25.06.04 |
| FAL.NHK.HT.B5.20.08.04 | DF | AA61HT | 20.0 | 0.11072 | 0.906 | 0.85% | 2 | 2 | 0.9443 | 100, 46.5, 21.6, 10.1, 4.68, 2.18, 1.01, 0.47 | 2.15 | YES | | | FAL.NHK.SLS.20.08.04 |
| **SODIUM ARSENITE** | | | | | | | | | | | | | | | |
| ***IIVS*** | | | | | | | | | | | | | | | |
| A1 | RF | AA61MV | 0.581 | 0.004 | 0.393 | 15.03% | 2 | 1 | 0.9631 | 10000, 1000, 100, 10, 1, 0.1, 0.01, 0.001 | 10 | RF | range finder | volatile effects in VC1 and VC2 | SLS-A5-N040401A |
| B1 | DF | AA61MV | 0.440 | 0.003 | 0.590 | 11.98% | 3 | 1 | 0.9426 | 30.0, 13.6, 6.20, 2.82, 1.28, 0.582, 0.265, 0.120 | 2.2 | YES | | used plate sealer | SLS-B4-N040513C |
| B2 | DF | AA61MV | 0.546 | 0.004 | 0.580 | 1.54% | 4 | 1 | 0.9724 | 30.0, 13.6, 6.20, 2.82, 1.28, 0.582, 0.265, 0.120 | 2.2 | YES | | plate sealer used | SLS-B5-N040514B |
| B3 | DF | AA61MV | 0.424 | 0.003 | 0.666 | 3.98% | 3 | 2 | 0.9931 | 30.0, 13.6, 6.20, 2.82, 1.28, 0.582, 0.265, 0.120 | 2.2 | YES | | plate sealer used | SLS-B6-N040716A |
| ***ECBC*** | | | | | | | | | | | | | | | |
| AA61KA-A1 | RF | AA61KA | 0.506 | 0.004 | 0.850 | 0.23% | 3 | 2 | 0.9923 | 10000, 1000, 100, 10, 1, 0.1, 0.01, 0.001 | 10 | RF | range finder | | SLS-P18 |

# NHK NRU Reference Substance Data

| Experiment ID NHK Cells | Assay Type[1] | Substance ID | $IC_{50}$ (ug/mL) | $IC_{50}$ (mM) | Mean VC OD[2] | Difference of right/left VC from mean VC[3] | Number of Points 0 - 50 %[4] | Number of Points 50 - 100 %[5] | $R^2$ [6] | Exposure Concentrations (ug/mL)[7] | Dilution Factor[8] | Acceptable Tests[9] | Rationale for Unacceptability | Notes | PC ID |
|---|---|---|---|---|---|---|---|---|---|---|---|---|---|---|---|
| AA61KA-B1 | DF | AA61KA | 1.05 | 0.008 | 0.822 | 1.69% | 3 | 3 | 0.9450 | 8.00, 3.72, 1.73, 0.805, 0.374, 0.174, 0.081, 0.038 | 2.15 | YES | | | SLS-P26 |
| AA61KA-B2 | DF | AA61KA | 0.764 | 0.006 | 1.005 | 1.85% | 4 | 4 | 0.9892 | 8.00, 3.72, 1.73, 0.805, 0.374, 0.174, 0.081, 0.038 | 2.15 | YES | | | SLS-P28 |
| AA61KA-B3 | DF | AA61KA | 0.555 | 0.004 | 0.801 | 0.43% | 4 | 4 | 0.9804 | 8.00, 3.72, 1.73, 0.805, 0.374, 0.174, 0.081, 0.038 | 2.15 | YES | | | SLS-P30 |
| ***FRAME*** | | | | | | | | | | | | | | | |
| FAL.NHK.GS.A1.24.09.04 | RF | AA61GS | 0.056 | 0.0004 | 0.652 | 2.90% | 1 | 3 | 0.9075 | 10000, 1000, 100, 10, 1.0, 0.1, 0.01, 0.001 | 10 | RF | range finder | | FAL.NHK.SLS.24.09.03 |
| FAL.NHK.GS.B1.01.10.04 | DF | AA61GS | 1.07 | 0.008 | 0.961 | 3.18% | 2 | 4 | 0.9814 | 10.0, 4.65, 2.16, 1.01, 0.47, 0.22, 0.10, 0.05 | 2.15 | NO | PC failed | | FAL.NHK.SLS.01.10.04 |
| FAL.NHK.GS.B2.07.10.04 | DF | AA61GS | 0.275 | 0.002 | 0.516 | 3.33% | 5 | 3 | 0.9843 | 10.0, 4.65, 2.16, 1.01, 0.47, 0.22, 0.10, 0.05 | 2.15 | YES | | | FAL.NHK.SLS.07.10.03 |
| FAL.NHK.GS.B3 .22.10.04 | DF | AA61GS | 0.545 | 0.004 | 0.712 | 5.53% | 4 | 1 | 0.9815 | 10.0, 4.65, 2.16, 1.01, 0.47, 0.22, 0.10, 0.05 | 2.15 | YES | | | FAL.NHK.SLS.22.10.04 (MO) |
| FAL.NHK.GS.B4 .28.10.04 | DF | AA61GS | 0.187 | 0.001 | 0.759 | 3.27% | 6 | 2 | 0.9854 | 10.0, 4.65, 2.16, 1.01, 0.47, 0.22, 0.10, 0.05 | 2.15 | YES | | | FAL.NHK.SLS.28.10.04 |

## SODIUM CHLORIDE

| | | | | | | | | | | | | | | | |
|---|---|---|---|---|---|---|---|---|---|---|---|---|---|---|---|
| ***IIVS*** | | | | | | | | | | | | | | | |
| A1 | RF | AA61PE | 2100 | 35.999 | 0.630 | 2.05% | 1 | 1 | 0.9570 | 10000, 1000, 100, 10, 1, 0.1, 0.01, 0.001 | 10 | RF | range finder | | SLS-A3-N040331A |
| B1 | DF | AA61PE | NA | NA | 0.549 | 1.11% | 0 | 0 | NA | 1000, 625, 391, 244, 153, 95.4, 59.6, 37.3 | 1.6 | NO | no points between 0 - 100% | | SLS-B4-N040513C |
| B2 | DF | AA61PE | NA | NA | 0.518 | 0.68% | 0 | 2 | NA | 1000, 625, 391, 244, 153, 95.4, 59.6, 37.3 | 1.6 | NO | no points between 0 - 100% | toxicity not detected | SLS-B5-N040514B |
| B3 | DF | AA61PE | 3170 | 54.236 | 0.707 | 4.08% | 3 | 4 | 0.9471 | 10000, 7143, 5102, 3644, 2603, 1859, 1328, 949 | 1.4 | YES | | outlier removed by SD | SLS-B6-N040716A |
| B4 | DF | AA61PE | 3470 | 59.332 | 0.599 | 10.23% | 3 | 5 | 0.9518 | 10000, 7143, 5102, 3644, 2603, 1859, 1328, 949 | 1.4 | YES | | | SLS-B7-N040717B |
| B5 | DF | AA61PE | 3770 | 64.460 | 0.550 | 2.04% | 2 | 3 | 0.9280 | 10000, 7143, 5102, 3644, 2603, 1859, 1328, 949 | 1.4 | YES | | | SLS-B8-N040819A |
| ***ECBC*** | | | | | | | | | | | | | | | |
| AA61JW-A1 | RF | AA61JW | 2250 | 38.485 | 0.817 | 2.63% | 1 | 5 | 0.9346 | 10000, 1000, 100, 10, 1, 0.1, 0.01, 0.001 | 10 | RF | range finder | | SLS-P12 |
| AA61JW-B1 | DF | AA61JW | 3730 | 63.869 | 0.949 | 2.37% | 3 | 5 | 0.9583 | 10000, 6803, 4628, 3148, 2142, 1457, 991, 674 | 1.47 | YES | | | SLS-P26 |
| AA61JW-B2 | DF | AA61JW | 3740 | 64.016 | 0.999 | 4.56% | 3 | 4 | 0.9559 | 10000, 6803, 4628, 3148, 2142, 1457, 991, 674 | 1.47 | YES | | | SLS-P28 |
| AA61JW-B3 | DF | AA61JW | 3280 | 56.142 | 0.746 | 0.28% | 3 | 5 | 0.9504 | 10000, 6803, 4628, 3148, 2142, 1457, 991, 674 | 1.47 | YES | | | SLS-P30 |
| ***FRAME*** | | | | | | | | | | | | | | | |
| FAL.NHK.FM.A1.14.05.04 | RF | AA61FM | 2330 | 39.837 | 0.715 | 0.68% | 1 | 4 | 0.9613 | 10000, 1000, 100, 10, 1, 0.1, 0.01, 0.001 | 10 | RF | range finder | | FAL.NHK.SLS.14.05.03 |
| FAL.NHK.FM.B1.25.06.04 | DF | AA61FM | 366 | 6.256 | 0.954 | 1.08% | 1 | 4 | 0.9769 | 1000, 465, 216, 101, 46.8, 21.8, 10.1, 4.71 | 2.15 | YES | | | FAL.NHK.SLS.25.06.04 |
| FAL.NHK.FM.B2.12.08.04 | DF | AA61FM | NA | NA | 0.658 | 6.32% | 0 | 0 | NA | 1000, 680, 463, 315, 214, 146, 99.1, 67.4 | 1.47 | NO | PC failed; no points between 0 - 100% | | FAL.NHK.SLS.12.08.04 |
| FAL.NHK.FM.B3.19.08.04 nb | DF | AA61FM | NA | NA | 0.397 | 0.95% | 0 | 1 | NA | 1000, 680, 463, 315, 214, 146, 99.1, 67.4 | 1.47 | NO | no points between 0 - 50% | no toxicity detected | FAL.NHK.SLS-NB.19.08.04 |
| FAL.NHK.FM.B4.30.09.04 | DF | AA61FM | NA | NA | 0.558 | 4.48% | 0 | 4 | 0.7866 | 2500, 930, 433, 201, 93.6, 43.5, 20.3, 9.42 | 2.15 | NO | no points between 0 - 50% | toxicity curve begins to rise at high concentrations; maybe affecting NRU | FAL.NHK.SLS.30.09.03 |

# NHK NRU Reference Substance Data

| Experiment ID NHK Cells | Assay Type[1] | Substance ID | $IC_{50}$ (ug/mL) | $IC_{50}$ (mM) | Mean VC OD[2] | Difference of right/left VC from mean VC[3] | Number of Points 0 - 50 %[4] | Number of Points 50 - 100 %[5] | $R^2$ [6] | Exposure Concentrations (ug/mL)[7] | Dilution Factor[8] | Acceptable Tests[9] | Rationale for Unacceptability | Notes | PC ID |
|---|---|---|---|---|---|---|---|---|---|---|---|---|---|---|---|
| FAL.NHK.FM.B5.05.11.04 | DF | AA61FM | 268 | 4.584 | 0.455 | 0.60% | 1 | 6 | 0.8717 | 1000, 465, 216, 101, 46.8, 21.8, 10.1, 4.71 | 2.15 | YES | | | FAL.NHK.SLS.05.11.04 |
| FAL.NHK.FM.B3. 12.11.04 (should be B6) | DF | AA61FM | NA | NA | 0.694 | 14.43% | 0 | 3 | NA | 1000, 465, 216, 101, 46.8, 21.8, 10.1, 4.71 | 2.15 | NO | no points between 0 - 50% | ppt in 1X C1-C4 | FAL.NHK.SLS.12.11.04 |
| FAL.NHK.FM.B7.17.11.04 | DF | AA61FM | NA | NA | 0.919 | 5.26% | 0 | 8 | NA | 2000, 1527, 1165, 890, 679, 518, 396, 302 | 1.31 | NO | no points between 0 - 50% | | FAL.NHK.SLS.17.11.04 |
| FAL.NHK.FM.B8.26.11.04 | DF | AA61FM | 2720 | 46.590 | 0.636 | 2.88% | 2 | 6 | 0.9214 | 10000, 4651, 2163, 1006, 468, 218, 101, 47.1 | 2.15 | YES | | | FAL.NHK.SLS.26.11.04 |

## SODIUM DICHROMATE DIHYDRATE

| | | | | | | | | | | | | | | | |
|---|---|---|---|---|---|---|---|---|---|---|---|---|---|---|---|
| ***IIVS*** | | | | | | | | | | | | | | | |
| A1 | RF | AA61FP | 0.390 | 0.001 | 0.545 | 2.40% | 2 | 2 | 0.9955 | 10000, 1000, 100, 10, 1, 0.1, 0.01, 0.001 | 10 | RF | range finder | | SLS-A4-N040331N |
| B1 | DF | AA61FP | 0.527 | 0.002 | 0.587 | 1.15% | 3 | 4 | 0.9863 | 5.00, 2.78, 1.54, 0.857, 0.476, 0.265, 0.147, 0.082 | 1.8 | YES | | | SLS-B4-N040513C |
| B2 | DF | AA61FP | 0.511 | 0.002 | 0.522 | 0.67% | 4 | 4 | 0.9863 | 5.00, 2.78, 1.54, 0.857, 0.476, 0.265, 0.147, 0.082 | 1.8 | YES | | | SLS-B5-N040514B |
| B3 | DF | AA61FP | 0.691 | 0.002 | 0.711 | 0.67% | 4 | 4 | 0.9841 | 5.00, 2.78, 1.54, 0.857, 0.476, 0.265, 0.147, 0.082 | 1.8 | YES | | | SLS-B6-N040716A |
| ***ECBC*** | | | | | | | | | | | | | | | |
| AA61NT-A1 | RF | AA61NT | 0.284 | 0.0010 | 0.542 | 1.94% | 4 | 3 | 0.9819 | 10000, 1000, 100, 10, 1, 0.1, 0.01, 0.001 | 10 | RF | range finder | | SLS-P16 |
| AA61NT-B1 | DF | AA61NT | 0.781 | 0.003 | 0.837 | 1.68% | 1 | 7 | 0.8935 | 1.00, 0.680, 0.463, 0.315, 0.214, 0.146, 0.099, 0.067 | 1.47 | YES | | | SLS-P26 |
| AA61NT-B2 | DF | AA61NT | 0.899 | 0.003 | 0.915 | 2.34% | 2 | 6 | 0.9495 | 2.00, 1.361, 0.926, 0.630, 0.428, 0.291, 0.198, 0.135 | 1.47 | YES | | | SLS-P28 |
| AA61NT-B3 | DF | AA61NT | 0.673 | 0.002 | 0.762 | 1.72% | 3 | 5 | 0.9680 | 2.00, 1.361, 0.926, 0.630, 0.428, 0.291, 0.198, 0.135 | 1.47 | YES | | | SLS-P30 |
| ***FRAME*** | | | | | | | | | | | | | | | |
| FAL.NHK.HK.A1.28.07.04 | RF | AA61HK | 0.112 | 0.000 | 0.059 | 15.81% | 5 | 3 | 0.7460 | 10000, 1000, 100, 10, 1, 0.1, 0.01, 0.001 | 10 | RF | range finder; % VC difference > 15 | | FAL.NHK.SLS.28.07.04 |
| FAL.NHK.HK.***A1.28.07.04 (should be 11.08.04)*** | RF | AA61HK | 0.770 | 0.003 | 0.623 | 6.22% | 1 | 1 | 0.9797 | 100, 31.6, 10.0, 3.17, 1.00, 0.317, 0.100, 0.0318 | 3.16 | YES | | | FAL.NHK.SLS.11.08.04 |
| FAL.NHK.HK-NB.B2.25.08.04 | DF | AA61HK | 48.8 | 0.164 | 0.877 | 4.03% | 1 | 4 | 0.9276 | 100, 31.6, 10.0, 3.17, 1.00, 0.317, 0.100, 0.0318 | 3.16 | NO | SD rejects | | FAL.NHK.SLS.25.08.04 |
| FAL.NHK.HK.B3.03.11.04 | DF | AA61HK | 0.512 | 0.002 | 0.518 | 1.50% | 1 | 3 | 0.9921 | 100, 31.6, 10.0, 3.17, 1.00, 0.317, 0.100, 0.0318 | 3.16 | YES | | solvent listed as DMSO--should be medium; SD confirmed medium was used | FAL.NHK.SLS.03.11.04 |
| FAL.NHK.HK.B3.12.11.04 (should be B4) | DF | AA61HK | 0.882 | 0.003 | 0.792 | 0.95% | 5 | 3 | 0.9919 | 100, 31.6, 10.0, 3.17, 1.00, 0.317, 0.100, 0.0318 | 3.16 | YES | | | FAL.NHK.SLS.12.11.04 |
| FAL.NHK.HK.B4.24.11.04 (should be B5) | DF | AA61HK | 1.24 | 0.004 | 1.060 | 0.46% | 1 | 2 | 0.9962 | 100, 31.6, 10.0, 3.17, 1.00, 0.317, 0.100, 0.0318 | 3.16 | YES | | | FAL.NHK.SLS.24.11.04 |

# NHK NRU Reference Substance Data

| Experiment ID NHK Cells | Assay Type[1] | Substance ID | $IC_{50}$ (ug/mL) | $IC_{50}$ (mM) | Mean VC OD[2] | Difference of right/left VC from mean VC[3] | Number of Points 0 - 50 %[4] | Number of Points 50 - 100 %[5] | $R^2$ [6] | Exposure Concentrations (ug/mL)[7] | Dilution Factor[8] | Acceptable Tests[9] | Rationale for Unacceptability | Notes | PC ID |
|---|---|---|---|---|---|---|---|---|---|---|---|---|---|---|---|
| **SODIUM I FLUORIDE** | | | | | | | | | | | | | | | |
| ***IIVS*** | | | | | | | | | | | | | | | |
| A2 | RF | AA61HF | 50.2 | 1.196 | 0.624 | 2.61% | 2 | 1 | 0.9754 | 10000, 1000, 100, 10, 1, 0.1, 0.01, 0.001 | 10 | RF | range finder | | SLS-A2 |
| B1 | DF | AA61HF | 50.1 | 1.193 | 0.355 | 6.81% | 5 | 1 | 0.9643 | 300, 188, 117, 73.2, 45.8, 28.6, 17.9, 11.2 | 1.6 | YES | | | SLS-B1 |
| B2 | DF | AA61HF | 51.9 | 1.236 | 0.275 | 12.46% | 5 | 2 | 0.9713 | 300, 188, 117, 73.2, 45.8, 28.6, 17.9, 11.2 | 1.6 | YES | | | SLS-B2 |
| B3 | DF | AA61HF | 49.1 | 1.169 | 0.321 | 2.29% | 5 | 3 | 0.9679 | 300, 188, 117, 73.2, 45.8, 28.6, 17.9, 11.2 | 1.6 | YES | | | SLS-B3 |
| B6 | DF | AA61HF | 63.8 | 1.519 | 0.56 | 6.98% | 4 | 4 | 0.9088 | 150, 115, 88.8, 68.3, 52.5, 40.4, 31.1, 23.9 | 1.46 | YES | | | SLS-B7 |
| ***ECBC*** | | | | | | | | | | | | | | | |
| AA61MG-A1 | RF | AA61MG | 35.2 | 0.838 | 0.673 | 0.47% | 2 | 3 | 0.9552 | 10000, 1000, 100, 10, 1.0, 0.1, 0.01, 0.001 | 10 | RF | range finder | range finder | SLS-P2 |
| AA61MG-B1 | DF | AA61MG | 55.0 | 1.310 | 0.359 | 0.67% | 3 | 5 | 0.9146 | 1000, 300, 100, 30, 10, 3, 1, 0.3 | 3.33 | YES | | | SLS-P5 |
| AA61MG-B2 | DF | AA61MG | 41.3 | 0.984 | 0.855 | 2.57% | 4 | 4 | 0.9376 | 150, 102.5, 69.4, 47.2, 32.1, 21.8, 14.9, 10.1 | 1.47 | YES | | | SLS-P7 |
| AA61MG-B3 | DF | AA61MG | 49.8 | 1.186 | 0.942 | 1.56% | 4 | 4 | 0.9160 | 150, 102.5, 69.4, 47.2, 32.1, 21.8, 14.9, 10.1 | 1.47 | YES | | | SLS-P9 |
| ***FRAME*** | | | | | | | | | | | | | | | |
| FAL.NHK.RH.A1.010803 | RF | AA61RH | 3.94 | 0.094 | 1.113 | 4.56% | 3 | 4 | 0.9474 | 10000, 1000, 100, 10, 1, 0.1, 0.01, 0.001 | 10 | RF | range finder | | FAL.NHK.SLS.010803 |
| FAL.NHK.RH.B1.080803 | DF | AA61RH | 28.6 | 0.681 | 0.762 | 0.08 | 1 | 5 | 0.9046 | 10000, 1000, 100, 10, 1, 0.1, 0.01, 0.001 | 10 | YES | range finder format | high background | FAL.NHK.SLS.08.08.03 |
| FAL.NHK.RH.B2.15.08.03 | DF | AA61RH | 45.2 | 1.076 | 0.549 | 0.03 | 4 | 3 | 0.9257 | 500, 233, 108, 50.3, 23.4, 10.9, 5.06, 2.35 | 2.15 | YES | | | FAL.NHK.SLS.15.08.03 |
| FAL.NHK.RH.B3.01.10.03 | DF | AA61RH | 51.2 | 1.219 | 1.140 | 0.01 | 4 | 4 | 0.9761 | 500, 233, 108, 50.3, 23.4, 10.9, 5.06, 2.35 | 2.15 | NO | PC failed | PC fails | FAL.NHK.SLS.01.10.03 |
| FAL.NHK.RH.B3.15.10.03 (should be B4?) | DF | AA61RH | 45.3 | 1.079 | 0.531 | 0.01 | 4 | 3 | 0.9771 | 500, 233, 108, 50.3, 23.4, 10.9, 5.06, 2.35 | 2.15 | YES | | | FAL.NHK.SLS.15.10.03 |
| **SODIUM HYPOCHLORITE** | | | | | | | | | | | | | | | |
| ***IIVS*** | | | | | | | | | | | | | | | |
| A1 | RF | AA61RD | 1250 | 16.796 | 0.439 | 6.83% | 0 | 2 | 0.9817 | 10000, 1000, 100, 10, 1, 0.1, 0.01, 0.001 | 10 | RF | range finder; no points between 0 - 50% | | SLS-A1-N040317B |
| B1 | DF | AA61RD | 1620 | 21.787 | 0.530 | 4.61% | 4 | 2 | 0.9847 | 10000, 5556, 3086, 1715,953, 529, 294, 163 | 1.8 | YES | | | SLS-B1-N040423A |
| B2 | DF | AA61RD | 1460 | 19.642 | 0.571 | 5.89% | 2 | 1 | 0.9828 | 10000, 5556, 3086, 1715,953, 529, 294, 163 | 1.8 | YES | | | SLS-B2-N040424A |
| B3 | DF | AA61RD | 1820 | 24.389 | 0.515 | 7.20% | 3 | 3 | 0.9820 | 4000, 2857, 2041, 1458, 1041, 744, 531, 379 | 1.4 | YES | | | SLS-B3-N040506A |
| ***ECBC*** | | | | | | | | | | | | | | | |
| AA61HE-A1 | RF | AA61HE | 1030 | 13.874 | 0.465 | 7.39% | 0 | 1 | 0.8508 | 10000, 1000, 100, 10, 1, 0.1, 0.01, 0.001 | 10 | RF | range finder | | SLS-P3 |
| AA61HE-B1 | DF | AA61HE | 1960 | 26.375 | 0.975 | 3.79% | 2 | 3 | 0.9309 | 10000, 4651, 2163, 1006, 468, 218, 101, 47.1 | 2.15 | YES | | | SLS-P7 |
| AA61HE-B2 | DF | AA61HE | 2390 | 32.151 | 1.161 | 1.44% | 2 | 5 | 0.9791 | 5000, 3401, 2313, 1574, 1071, 728, 496, 337 | 1.47 | YES | | | SLS-P9 |
| AA61HE-B3 | DF | AA61HE | 1240 | 16.718 | 0.725 | 0.10% | 4 | 3 | 0.9857 | 5000, 3401, 2313, 1574, 1071, 728, 496, 337 | 1.47 | YES | | | SLS-P12 |
| ***FRAME*** | | | | | | | | | | | | | | | |
| FAL.NHK.LU.A1.13.02.03 | RF | AA61LU | 955 | 12.829 | 0.077 | 1.41% | 1 | 0 | 0.0662 | 10000, 1000, 100, 10, 1, 0.1, 0.01, 0.001 | 10 | RF | range finder | rejected by SD due to bacterial contam. in some of the plates in this test series | FAL.NHK.SLS.13.02.03 |
| FAL.NHK.LU.A2.20.02.03 | DF | AA61LU | 738 | 9.913 | 0.204 | 12.54% | 6 | 1 | 0.9071 | 10000, 6803, 4628, 3148, 2142, 1457, 991, 674 | 1.47 | YES | | this is a definitive test since conc. series is different from A1 RF | FAL.NHK.SLS.20.02.03 |

# NHK NRU Reference Substance Data

| Experiment ID NHK Cells | Assay Type[1] | Substance ID | $IC_{50}$ (ug/mL) | $IC_{50}$ (mM) | Mean VC OD[2] | Difference of right/left VC from mean VC[3] | Number of Points 0 - 50 %[4] | Number of Points 50 - 100 %[5] | $R^2$ [6] | Exposure Concentrations (ug/mL)[7] | Dilution Factor[8] | Acceptable Tests[9] | Rationale for Unacceptability | Notes | PC ID |
|---|---|---|---|---|---|---|---|---|---|---|---|---|---|---|---|
| FAL.NHK.LU.B1.27.02.04 | DF | AA61LU | NA | NA | 0.492 | 9.65% | 0 | 0 | NA | 2500, 1701, 1157, 787, 535, 364, 248, 169 | 1.47 | NO | no points between 0-100%; wrong solvent used | used wrong solvent; should be medium instead of DMSO | FAL.NHK.SLS.27.02.03 |
| FAL.NHK.LU.B2.19.03.04 | DF | AA61LU | 1120 | 15.073 | 0.437 | 3.51% | 2 | 6 | 0.9027 | 2500, 1701, 1157, 787, 535, 364, 248, 169 | 1.47 | YES | | | FAL.NHK.SLS.19.03.03 |
| FAL.NHK.LU.B3.25.03.04 | DF | AA61LU | 1870 | 25.130 | 0.628 | 1.58% | 1 | 2 | 0.7836 | 2500, 1701, 1157, 787, 535, 364, 248, 169 | 1.47 | YES | | | FAL.NHK.SLS.25.03.03 |

## SODIUM OXALATE

| | | | | | | | | | | | | | | | |
|---|---|---|---|---|---|---|---|---|---|---|---|---|---|---|---|
| ***IIVS*** | | | | | | | | | | | | | | | |
| A1 | RF | AA61GX | NA | NA | 0.503 | 2.45% | 0 | 2 | NA | 100, 10, 1, 0.1, 0.01, 0.001, 0.0001, 0.00001 | 10 | RF | range finder; no points between 0 - 50% | | SLS-A5-N040401A |
| B1 | DF | AA61GX | 252 | 1.879 | 0.631 | 2.24% | 2 | 6 | 0.9647 | 500, 357, 255, 182, 130, 93.0, 66.4, 47.4 | 1.4 | YES | | | SLS-B12-N041022B |
| B2 | DF | AA61GX | 428 | 3.191 | 0.565 | 1.71% | 1 | 5 | 0.8879 | 510, 364, 260, 186, 133, 94.8, 67.7, 48.4 | 1.4 | YES | | 130 ul of 2X doses were applied. Final conc. values adjusted in data sheets bySD | SLS-B113-N041029B |
| B3 | DF | AA61GX | 400 | 2.985 | 0.669 | 2.53% | 1 | 7 | 0.8426 | 500, 357, 255, 182, 130, 93.0, 66.4, 47.4 | 1.4 | YES | | | SLS-B14-N041030A |
| ***ECBC*** | | | | | | | | | | | | | | | |
| AA61LZ-A1 | RF | AA61LZ | 230 | 1.717 | 0.621 | 2.94% | 2 | 6 | 0.9507 | 10000, 1000, 100, 10, 1, 0.1, 0.01, 0.001 | 10 | RF | range finder | | SLS-P20 |
| AA61LZ-B1 | DF | AA61LZ | 312 | 2.328 | 0.636 | 0.73% | 3 | 5 | 0.8613 | 1000, 680, 463, 315, 214, 146, 99.1, 67.4 | 1.47 | YES | | ppt in 1X C1-C3 | SLS-P40 |
| AA61LZ-B2 | DF | AA61LZ | 337 | 2.517 | 0.709 | 1.12% | 2 | 6 | 0.9490 | 600, 408, 278, 189, 128, 87.4, 59.5, 40.5 | 1.47 | YES | | ppt in 1X C1-C2 | SLS-P42 |
| AA61LZ-B3 | DF | AA61LZ | 417 | 3.111 | 0.928 | 5.95% | 1 | 5 | 0.9635 | 600, 408, 278, 189, 128, 87.4, 59.5, 40.5 | 1.47 | YES | | ppt in 1X C1 | SLS-P44 |
| ***FRAME*** | | | | | | | | | | | | | | | |
| FAL.NHK.RC.A1.24.09.04 | RF | AA61RC | 687 | 5.127 | 0.404 | 1.28% | 2 | 0 | 0.6286 | 10000, 1000, 100, 10, 1.0, 0.1, 0.01, 0.001 | 10 | RF | range finder | ppt in 1X C1-C2 | FAL.NHK.SLS.24.09.03 |
| FAL.NHK.RC.B1.29.10.04 | DF | AA61RC | 134 | 1.002 | 0.598 | 5.63% | 5 | 3 | 0.8555 | 1000, 680, 463, 315, 214, 146, 99.1, 67.4 | 1.47 | YES | | ppt In 1X C1-C5 | FAL.NHK.SLS.29.10.04 |
| FAL.NHK.RC.B2.03.11.04 | DF | AA61RC | 422 | 3.147 | 0.465 | 1.00% | 1 | 7 | 0.7013 | 500, 340, 231, 157, 107, 72.8, 49.6, 33.7 | 1.47 | YES | | | FAL.NHK.SLS.03.11.04 |
| FAL.NHK.RC.B3.10.11.04 | DF | AA61RC | 384 | 2.863 | 1.082 | 0.92% | 5 | 1 | 0.9714 | 2000, 1361, 926, 630, 428, 291,198,135 | 1.47 | YES | | ppt In 1X C1-C5 | FAL.NHK.SLS.10.11.04 |
| FAL.NHK.RC.B4.17.11.04 | DF | AA61RC | 460 | 3.435 | 1.002 | 2.39% | 2 | 5 | 0.9280 | 1000, 680, 463, 315, 214, 146, 99.1, 67.4 | 1.47 | YES | | | FAL.NHK.SLS.17.11.04 |

## SODIUM SELENATE

| | | | | | | | | | | | | | | | |
|---|---|---|---|---|---|---|---|---|---|---|---|---|---|---|---|
| ***IIVS*** | | | | | | | | | | | | | | | |
| A2 | RF | AA61FS | 7.44 | 0.039 | 0.646 | 4.12 | 4 | 1 | 0.9744 | 10000, 1000, 100, 10, 1, 0.1, 0.01, 0.001 | 10 | RF | range finder | | SLS-A2 |
| B1 | DF | AA61FS | 11.0 | 0.058 | 0.366 | 1.07 | 7 | 1 | 0.9841 | 556, 309, 172, 95.3, 53.0, 29.4, 16.3, 9.07 | 1.8 | YES | | | SLS-B1 |
| B2 | DF | AA61FS | 10.5 | 0.056 | 0.29 | 12.33 | 4 | 1 | 0.9854 | 556, 309, 172, 95.3, 53.0, 29.4, 16.3, 9.08 | 1.8 | YES | | | SLS-B2 |
| B3 | DF | AA61FS | 8.49 | 0.045 | 0.339 | 3.42 | 4 | 2 | 0.9763 | 100, 55.6, 30.9, 17.1, 9.5, 5.3, 2.94, 1.63 | 1.8 | YES | | | SLS-B3 |
| ***ECBC*** | | | | | | | | | | | | | | | |
| AA61LF-A1 | RF | AA61LF | 7.91 | 0.042 | 0.605 | 6.62 | 3 | 2 | 0.9431 | 10000, 1000, 100, 10, 1.0, 0.1, 0.01, 0.001 | 10 | RF | range finder | range finder | SLS-P1 |
| AA61LF-B1 | DF | AA61LF | 7.99 | 0.042 | 0.361 | 5.82 | 7 | 1 | 0.9236 | 100, 68, 46.3, 31.5, 21.4, 14.6, 9.9, 6.7 | 1.47 | YES | | | SLS-P5 |
| AA61LF-B3 | DF | AA61LF | 7.95 | 0.042 | 0.890 | 1.82 | 4 | 3 | 0.9492 | 100, 46.5, 21.6, 10.1, 4.7, 2.2, 1.0, 0.47 | 2.15 | YES | | | SLS-P9 |
| AA61LF-B4 | DF | AA61LF | 4.85 | 0.026 | 0.836 | 5.88 | 4 | 3 | 0.9845 | 100, 46.5, 21.6, 10.1, 4.7, 2.2, 1.0, 0.47 | 2.15 | NO | PC failed | | SLS-P11 |

# NHK NRU Reference Substance Data

| Experiment ID NHK Cells | Assay Type[1] | Substance ID | $IC_{50}$ (ug/mL) | $IC_{50}$ (mM) | Mean VC OD[2] | Difference of right/left VC from mean VC[3] | Number of Points 0 - 50 %[4] | Number of Points 50 - 100 %[5] | $R^2$ [6] | Exposure Concentrations (ug/mL)[7] | Dilution Factor[8] | Acceptable Tests[9] | Rationale for Unacceptability | Notes | PC ID |
|---|---|---|---|---|---|---|---|---|---|---|---|---|---|---|---|
| AA61LF-B5 | DF | AA61LF | 6.48 | 0.034 | 0.647 | 1.62 | 4 | 2 | 0.8997 | 100, 46.5, 21.6, 10.1, 4.7, 2.2, 1.0, 0.47 | 2.15 | YES | | | SLS-P19 |
| ***FRAME*** | | | | | | | | | | | | | | | |
| FAL.NHK.NS.A1.010803 | RF | AA61NS | 10.4 | 0.055 | 0.360 | 5.76 | 2 | 3 | 0.9256 | 10000, 1000, 100, 10, 1, 0.1, 0.01, 0.001 | 10 | RF | range finder | | FAL.NHK.SLS.010803 |
| FAL.NHK.NS.A2.080803 | RF | AA61NS | 14.6 | 0.077 | 0.716 | 5.02 | 6 | 0 | 0.9642 | 250, 170, 116, 78.7, 53.6, 36.4, 24.8, 16.9 | 1.47 | RF | range finder | high background | FAL.NHK.SLS.08.08.03 |
| FAL.NHK.NS.B2.15.08.03 (should be B1) | DF | AA61NS | 12.2 | 0.065 | 0.551 | 5.35 | 4 | 4 | 0.9509 | 50, 34.01, 23.14, 15.74, 10.71, 7.28, 4.96, 3.37 | 1.47 | YES | | this is the first definitive test | FAL.NHK.SLS.15.08.03 |
| FAL.NHK.NS.B2.230803 | DF | AA61NS | 9.34 | 0.049 | 0.490 | 0.47 | 5 | 3 | 0.9542 | 50, 34.01, 23.14, 15.74, 10.71, 7.28, 4.96, 3.37 | 1.47 | NO | PC failed | | FAL.NHK.SLS.230803 |
| FAL.NHK.NS.B3.28.08.06 | DF | AA61NS | 34.0 | 0.180 | 0.398 | 3.79 | 1 | 6 | 0.6981 | 50, 34.01, 23.14, 15.74, 10.71, 7.28, 4.96, 3.37 | 1.47 | NO | low r2 | | FAL.NHK.SLS.280803 |
| FAL.NHK.NS.B4.05.09.03 | DF | AA61NS | 9.14 | 0.048 | 0.207 | 7.21 | 6 | 2 | 0.9566 | 75, 51.02, 34.71, 23.61, 16.06, 10.93, 7.433, 5.06 | 1.47 | YES | | | FAL.NHK.SLS.050903 |
| FAL.NHK.NS.B5.01.10.03 | DF | AA61NS | 7.75 | 0.041 | 1.124 | 6.36 | 6 | 2 | 0.9147 | 75, 51.02, 34.71, 23.61, 16.06, 10.93, 7.433, 5.06 | 1.47 | NO | PC failed | | FAL.NHK.SLS.01.10.03 |
| FAL.NHK.NS.B5.15.10.03 (should be B6?) | DF | AA61NS | 27.0 | 0.143 | 0.565 | 1.67 | 2 | 4 | 0.9272 | 50, 34.01, 23.14, 15.74, 10.71, 7.28, 4.96, 3.37 | 1.47 | YES | | | FAL.NHK.SLS.15.10.03 |

## STRYCHNINE

| | | | | | | | | | | | | | | | |
|---|---|---|---|---|---|---|---|---|---|---|---|---|---|---|---|
| ***IIVS*** | | | | | | | | | | | | | | | |
| A1 | RF | AA61JY | 67.1 | 0.201 | 0.490 | 3.17% | 1 | 1 | 0.8475 | 100, 10, 1, 0.1, 0.01, 0.001, 0.0001, 0.00001 | 10 | RF | range finder | ppt in 2X C1 | SLS-A5-N040401A |
| B1 | DF | AA61JY | 59.0 | 0.176 | 0.606 | 1.54% | 2 | 6 | 0.9699 | 100, 71.4, 51.0, 36.4, 26.0, 18.6, 13.3, 9.49 | 1.4 | YES | | ppt in 2X C1 | SLS-B12-N041022B |
| B2 | DF | AA61JY | 52.7 | 0.158 | 0.598 | 3.50% | 2 | 6 | 0.9122 | 100, 71.4, 51.0, 36.4, 26.0, 18.6, 13.3, 9.49 | 1.4 | YES | | ppt in 2X C1 | SLS-B14-N041030A |
| B3 | DF | AA61JY | 53.5 | 0.160 | 0.616 | 2.26% | 2 | 6 | 0.9020 | 100, 71.4, 51.0, 36.4, 26.0, 18.6, 13.3, 9.49 | 1.4 | YES | | ppt in 2X C1 | SLS-B15-N041110A |
| ***ECBC*** | | | | | | | | | | | | | | | |
| AA61NR-A1 | RF | AA61NR | 183 | 0.548 | 0.882 | 6.19% | 1 | 6 | 0.8663 | 500, 50.0, 5.0, 0.50, 0.05, 0.005, 0.0005, 0.00005 | 10 | RF | range finder | | SLS-P39 |
| AA61NR-B1 | DF | AA61NR | 66.5 | 0.199 | 0.878 | 3.32% | 5 | 3 | 0.8150 | 400, 272, 185, 126, 85.7, 58.3, 39.6, 27.0 | 1.47 | YES | | ppt in 2X C1-C8 | SLS-P47 |
| AA61NR-B2 | DF | AA61NR | 214 | 0.641 | 1.230 | 1.92% | 2 | 6 | 0.9262 | 400, 272, 185, 126, 85.7, 58.3, 39.6, 27.0 | 1.47 | YES | | ppt in 2X C1-C3 | SLS-P50 |
| AA61NR-B3 | DF | AA61NR | 72.3 | 0.216 | 0.593 | 3.86% | 5 | 3 | 0.9316 | 400, 272, 185, 126, 85.7, 58.3, 39.6, 27.0 | 1.47 | YES | | ppt in 2X C1-C5 | SLS-P52 |
| AA61NR-B4 | DF | AA61NR | 48.1 | 0.144 | 0.676 | 2.33% | 6 | 2 | 0.9227 | 400, 272, 185, 126, 85.7, 58.3, 39.6, 27.0 | 1.47 | YES | | ppt in 2X C1 | SLS-P54 |
| ***FRAME*** | | | | | | | | | | | | | | | |
| FAL.NHK.FY.A1.24.09.04 | RF | AA61FY | 87.7 | 0.262 | 0.520 | 1.43% | 1 | 0 | -0.0136 | 100, 10, 1.0, 0.1, 0.01, 0.001, 0.0001, 0.00001 | 10 | RF | range finder | | FAL.NHK.SLS.24.09.03 |
| FAL.NHK.FY.B1.01.10.04 | DF | AA61FY | 60.3 | 0.180 | 0.965 | 14.61% | 1 | 2 | 0.6474 | 125, 58.1, 27.0, 12.6, 5.85, 2.72, 1.27, 0.59 | 2.15 | NO | PC failed | | FAL.NHK.SLS.01.10.04 |
| FAL.NHK.FY.B2.08.10.04 | DF | AA61FY | 83.9 | 0.251 | 0.595 | 2.95% | 2 | 3 | 0.9088 | 250, 116, 54.1, 25.2, 11.7, 5.44, 2.53, 1.18 | 2.15 | YES | | | FAL.NHK.SLS.08.10.03 |
| FAL.NHK.FY.B3.29.10.04 | DF | AA61FY | 29.9 | 0.089 | 0.585 | 9.13% | 4 | 3 | 0.9623 | 500, 232, 108, 50.3, 23.9, 10.4, 5.06, 2.35 | 2.15 | YES | | | FAL.NHK.SLS.29.10.04 |
| FAL.NHK.FY.B4.05.11.04 | DF | AA61FY | 43.8 | 0.131 | 0.475 | 5.37% | 4 | 3 | 0.9636 | 500, 232, 108, 50.3, 23.9, 10.4, 5.06, 2.35 | 2.15 | YES | | outlier removed by SD | FAL.NHK.SLS.05.11.04 |

## THALLIUM I SULFATE

| | | | | | | | | | | | | | | | |
|---|---|---|---|---|---|---|---|---|---|---|---|---|---|---|---|
| ***IIVS*** | | | | | | | | | | | | | | | |
| A1 | RF | AA61KJ | 0.0982 | 0.0002 | 0.448 | 10.68% | 4 | 0 | 0.9741 | 100, 10, 1, 0.1, 0.01, 0.001, 0.0001, 0.00001 | 10 | RF | range finder; no points between 50 - 100% | | SLS-A1-N040317B |

# NHK NRU Reference Substance Data

| Experiment ID NHK Cells | Assay Type[1] | Substance ID | $IC_{50}$ (ug/mL) | $IC_{50}$ (mM) | Mean VC OD[2] | Difference of right/left VC from mean VC[3] | Number of Points 0 - 50 %[4] | Number of Points 50 - 100 %[5] | $R^2$ [6] | Exposure Concentrations (ug/mL)[7] | Dilution Factor[8] | Acceptable Tests[9] | Rationale for Unacceptability | Notes | PC ID |
|---|---|---|---|---|---|---|---|---|---|---|---|---|---|---|---|
| B1 | DF | AA61KJ | 0.137 | 0.0003 | 0.574 | 0.51% | 4 | 3 | 0.9864 | 1.00, 0.556, 0.309, 0.171, 0.095, 0.053, 0.029, 0.016 | 1.8 | YES | | | SLS-B1-N040423A |
| B2 | DF | AA61KJ | 0.141 | 0.0003 | 0.553 | 1.22% | 4 | 2 | 0.9838 | 1.00, 0.556, 0.309, 0.171, 0.095, 0.053, 0.029, 0.016 | 1.8 | YES | | | SLS-B2-N040424A |
| B3 | DF | AA61KJ | 0.104 | 0.0002 | 0.471 | 0.27% | 4 | 3 | 0.9906 | 1.00, 0.556, 0.309, 0.171, 0.095, 0.053, 0.029, 0.016 | 1.8 | YES | | Mimimal to no NRU in C1-C4 although visual observatios appeared as level 2. | SLS-B3-N040506A |
| ***ECBC*** | | | | | | | | | | | | | | | |
| AA61PB-A1 | RF | AA61PB | NA | NA | 0.610 | 3.77% | 6 | 1 | NA | 500, 50.0, 5.00, 0.5, 0.05, 0.005, 0.0005, 0.00005 | 10 | RF | range finder | ppt in 2X C1 | SLS-P38 |
| AA61PB-B1 | DF | AA61PB | NA | NA | 0.975 | 2.18% | 0 | 8 | NA | 0.005, 0.00233, 0.00108, 0.0005, 0.00023, 0.00011, 0.00005, 0.00002 | 2.15 | NO | no points between 0 - 50% | | SLS-P46 |
| AA61PB-B2 | DF | AA61PB | 0.313 | 0.0006 | 1.127 | 6.67% | 2 | 6 | 0.8224 | 1.00, 0.465, 0.216, 0.101, 0.047, 0.022, 0.010, 0.005 | 2.15 | YES | | | SLS-P50 |
| AA61PB-B3 | DF | AA61PB | 0.132 | 0.0003 | 0.635 | 0.47% | 4 | 4 | 0.9863 | 2.00, 0.930, 0.433, 0.201, 0.094, 0.044, 0.020, 0.009 | 2.15 | YES | | ppt in 2X C1 | SLS-P52 |
| AA61PB-B4 | DF | AA61PB | 0.149 | 0.0003 | 0.727 | 1.40% | 4 | 4 | 0.9772 | 2.00, 0.930, 0.433, 0.201, 0.094, 0.044, 0.020, 0.009 | 2.15 | YES | | | SLS-P54 |
| ***FRAME*** | | | | | | | | | | | | | | | |
| FAL.NHK.GB.A1.13.02.03 | RF | AA61GB | 0.0708 | 0.0001 | 0.203 | 6.82% | 3 | 3 | 0.6722 | 500, 50, 5, 0.5, 0.05, 0.005, 0.0005, 0.00005 | 10 | RF | range finder | rejected by SD due to bacterial contam. in some of the plates in this test series | FAL.NHK.SLS.13.02.03 |
| FAL.NHK.GB.B1.18.03.04 | DF | AA61GB | 0.167 | 0.0003 | 0.449 | 10.16% | 3 | 2 | 0.9629 | 1.0, 0.47, 0.22, 0.10, 0.05, 0.022, 0.010, 0.0047 | 2.15 | YES | | | FAL.NHK.SLS.18.03.03 |
| FAL.NHK.GB.B2.19.03.04 | DF | AA61GB | 0.175 | 0.0003 | 0.448 | 0.84% | 3 | 5 | 0.9714 | 1.0, 0.47, 0.22, 0.10, 0.05, 0.022, 0.010, 0.0047 | 2.15 | YES | | | FAL.NHK.SLS.19.03.03 |
| FAL.NHK.GB.B3.25.03.04 | DF | AA61GB | 0.118 | 0.0002 | 0.736 | 5.85% | 4 | 3 | 0.9244 | 1.0, 0.47, 0.22, 0.10, 0.05, 0.022, 0.010, 0.0047 | 2.15 | YES | | | FAL.NHK.SLS.25.03.03 |

## TRICHLOROACETIC ACID

| | | | | | | | | | | | | | | | |
|---|---|---|---|---|---|---|---|---|---|---|---|---|---|---|---|
| ***IIVS*** | | | | | | | | | | | | | | | |
| A1 | RF | AA61MR | 661 | 4.043 | 0.513 | 1.38% | 2 | 1 | 0.9403 | 10000, 1000, 100, 10, 1, 0.1, 0.01, 0.001 | 10 | RF | range finder | ppt in 1X C1 | SLS-A4-N040331N |
| B1 | DF | AA61MR | 423 | 2.587 | 0.572 | 0.22% | 5 | 2 | 0.9761 | 10000, 5556, 3086, 1715, 953, 529, 294, 163 | 1.8 | YES | | ppt in 1X C1-C2 | SLS-B4-N040513C |
| B2 | DF | AA61MR | 423 | 2.587 | 0.665 | 0.91% | 4 | 2 | 0.9853 | 10000, 5556, 3086, 1715, 953, 529, 294, 163 | 1.8 | YES | | ppt in 1X C1-C2 | SLS-B5-N040514B |
| B3 | DF | AA61MR | 335 | 2.050 | 0.672 | 8.28% | 3 | 2 | 0.9732 | 10000, 5556, 3086, 1715, 953, 529, 294, 163 | 1.8 | YES | | ppt in 1X C1-C2 | SLS-B6-N040716A |
| ***ECBC*** | | | | | | | | | | | | | | | |
| AA61KT-A1 | RF | AA61KT | 348 | 2.132 | 0.561 | 3.44% | 2 | 4 | 0.9560 | 10000, 1000, 100, 10, 1, 0.1, 0.01, 0.001 | 10 | RF | range finder | | SLS-P17 |
| AA61KT-B1 | DF | AA61KT | 400 | 2.448 | 0.789 | 0.01% | 4 | 3 | 0.9754 | 7000, 3256, 1514, 704, 328, 152, 70.9, 33.0 | 2.15 | YES | | | SLS-P33 |
| AA61KT-B2 | DF | AA61KT | 366 | 2.243 | 0.666 | 4.87% | 4 | 4 | 0.9886 | 7000, 3256, 1514, 704, 328, 152, 70.9, 33.0 | 2.15 | YES | | | SLS-P35 |

# NHK NRU Reference Substance Data

| Experiment ID NHK Cells | Assay Type[1] | Substance ID | $IC_{50}$ (ug/mL) | $IC_{50}$ (mM) | Mean VC OD[2] | Difference of right/left VC from mean VC[3] | Number of Points 0 - 50 %[4] | Number of Points 50 - 100 %[5] | $R^2$ [6] | Exposure Concentrations (ug/mL)[7] | Dilution Factor[8] | Acceptable Tests[9] | Rationale for Unacceptability | Notes | PC ID |
|---|---|---|---|---|---|---|---|---|---|---|---|---|---|---|---|
| AA61KT-B3 | DF | AA61KT | 277 | 1.693 | 0.500 | 0.20% | 4 | 4 | 0.9697 | 7000, 3256, 1514, 704, 328, 152, 70.9, 33.0 | 2.15 | YES | | ppt in 1X C1 | SLS-P37 |
| ***FRAME*** | | | | | | | | | | | | | | | |
| FAL.NHK.GH.A1.28.07.04 | RF | AA61GH | 627 | 3.835 | 0.053 | 4.54% | 2 | 1 | 0.8134 | 10000, 1000, 100, 10, 1, 0.1, 0.01, 0.001 | 10 | RF | range finder | | FAL.NHK.SLS.28.07.04 |
| FAL.NHK.GH.B1.11.08.04 | DF | AA61GH | 649 | 3.970 | 0.507 | 12.88% | 4 | 4 | 0.8715 | 10000, 4651, 2163, 1006, 468, 218, 101, 47 | 2.15 | YES | | | FAL.NHK.SLS.11.08.04 |
| FAL.NHK.GH.B2.27.08.04 | DF | AA61GH | 370 | 2.263 | 0.439 | 1.88% | 4 | 4 | 0.8671 | 10000, 4651, 2163, 1006, 468, 218, 101, 47 | 2.15 | YES | | | FAL.NHK.SLS.27.08.04 |
| FAL.NHK.GH.B3.17.09.04 | DF | AA61GH | 604 | 3.696 | 0.711 | 5.96% | 4 | 4 | 0.9901 | 10000, 4651, 2163, 1006, 468, 218, 101, 47 | 2.15 | YES | | outlier removed by SD | FAL.NHK.SLS.17.09.04 |

## 1,1,1-TRICHLOROETHANE

| | | | | | | | | | | | | | | | |
|---|---|---|---|---|---|---|---|---|---|---|---|---|---|---|---|
| ***IIVS*** | | | | | | | | | | | | | | | |
| A1 | RF | AA61KG | NA | NA | 0.516 | 5.11% | 0 | 1 | NA | 10000, 1000, 100, 10, 1, 0.1, 0.01, 0.001 | 10 | RF | range finder; no points between 0 - 50% | | SLS-A5-N040401A |
| B1 | DF | AA61KG | NA | NA | 0.573 | 1.92% | 0 | 5 | -3.2450 | 10000, 7143, 5102, 3644, 2603, 1859, 1328, 949 | 1.4 | NO | no points between 0 - 50% | ppt in 1X C1 | SLS-B113-N041029B |
| B2 | DF | AA61KG | NA | NA | 0.677 | 2.29% | 0 | 3 | 0.7130 | 12500, 8929, 6378, 4555, 3254, 2324, 1660, 1186 | 1.4 | NO | no points between 0 - 50% | ppt in 1X C1-C3 | SLS-B14-N041030A |
| B3 | DF | AA61KG | 9400 | 70.439 | 0.598 | 4.99% | 0 | 2 | 0.8828 | 12500, 8929, 6378, 4555, 3254, 2324, 1660, 1186 | 1.4 | NO | no points between 0 - 50% | ppt in 1X C1-C3; ppt in 2X C1-C4; test article was noted to form droplets and adhere to the dilution vesel; maximum plausible dose was tested. | SLS-B15-N041110A |
| ***ECBC*** | | | | | | | | | | | | | | | |
| AA61JV-A1(sealer) | RF | AA61JV | 5300 | 39.702 | 0.614 | 8.77% | 1 | 7 | 0.8101 | 10000, 1000, 100, 10, 1, 0.1, 0.01, 0.001 | 10 | RF | range finder | | SLS-P20 |
| AA61JV-B1(sealer) | DF | AA61JV | 7530 | 56.469 | 0.920 | 1.02% | 1 | 6 | 0.9418 | 10000, 6803, 4628, 3148, 2142, 1457, 991, 674 | 1.47 | YES | | ppt in 2X C1-C8 | SLS-P46 |
| AA61JV-B2 (sealer) | DF | AA61JV | 8710 | 65.285 | 0.674 | 2.11% | 1 | 6 | 0.9422 | 10000, 8264, 6830, 5645, 4665, 3855, 3186, 2633 | 1.21 | YES | | ppt in 2X C1; 1X C1 has large globules of chemical; outlier removed by SD | SLS-P48 |
| AA61JV-B3 (sealer) | DF | AA61JV | 8170 | 61.208 | 1.119 | 2.10% | 1 | 7 | 0.8530 | 10000, 8264, 6830, 5645, 4665, 3855, 3186, 2633 | 1.21 | YES | | ppt in 2X C1-C4; 1X C1 has large globules of chemical; | SLS-P51 |
| ***FRAME*** | | | | | | | | | | | | | | | |
| FAL.NHK.PN.A1.24.09.04 | RF | AA61PN | NA | NA | 0.472 | 8.81% | 0 | 2 | NA | 10000, 1000, 100, 10, 1.0, 0.1, 0.01, 0.001 | 10 | RF | range finder | | FAL.NHK.SLS.24.09.03 |
| FAL.NHK.PN.B1.29.10.04 | DF | AA61PN | NA | NA | 0.543 | 4.83% | 0 | 0 | 0.9623 | 2500, 1701, 1157, 787, 535, 364, 248, 169 | 1.47 | NO | no points between 0-100% | | FAL.NHK.SLS.29.10.04 |
| FAL.NHK.PN.B2.19.11.04 | DF | AA61PN | NA | NA | 0.417 | 4.54% | 0 | 1 | NA | 10000, 4651, 2163, 1006, 468, 218, 101, 47.1 | 2.15 | NO | no points between 0-50% | | FAL.NHK.SLS.19.11.04 |
| FAL.NHK.PN.B3.24.11.04 | DF | AA61PN | NA | NA | 1.211 | 2.37% | 0 | 6 | NA | 10000, 4651, 2163, 1006, 468, 218, 101, 47.1 | 2.15 | NO | no points between 0-50% | odd curve; two columns of data removed by SD (wells not seeded with cells?) | FAL.NHK.SLS.24.11.04 |

## TRIETHYLENEMELAMINE

| | | | | | | | | | | | | | | | |
|---|---|---|---|---|---|---|---|---|---|---|---|---|---|---|---|
| ***IIVS*** | | | | | | | | | | | | | | | |
| A1 | RF | AA61MT | 1.64 | 0.008 | 0.690 | 3.71% | 1 | 2 | 0.9531 | 10, 1, 0.1, 0.01, 0.001, 0.0001, 0.00001, 0.000001 | 10 | RF | range finder | | SLS-A2-N040320B |

# NHK NRU Reference Substance Data

| Experiment ID NHK Cells | Assay Type[1] | Substance ID | $IC_{50}$ (ug/mL) | $IC_{50}$ (mM) | Mean VC OD[2] | Difference of right/left VC from mean VC[3] | Number of Points 0 - 50 %[4] | Number of Points 50 - 100 %[5] | $R^2$ [6] | Exposure Concentrations (ug/mL)[7] | Dilution Factor[8] | Acceptable Tests[9] | Rationale for Unacceptability | Notes | PC ID |
|---|---|---|---|---|---|---|---|---|---|---|---|---|---|---|---|
| B1 | DF | AA61MT | 1.66 | 0.008 | 0.543 | 8.55% | 3 | 5 | 0.9632 | 10.0, 5.56, 3.09, 1.71, 0.953, 0.529, 0.294, 0.163 | 1.8 | YES | | | SLS-B1-N040423A |
| B2 | DF | AA61MT | 2.12 | 0.010 | 0.572 | 4.28% | 3 | 3 | 0.9763 | 10.0, 5.56, 3.09, 1.71, 0.953, 0.529, 0.294, 0.163 | 1.8 | YES | | | SLS-B2-N040424A |
| B3 | DF | AA61MT | 2.62 | 0.013 | 0.544 | 3.49% | 2 | 4 | 0.9730 | 10.0, 5.56, 3.09, 1.71, 0.953, 0.529, 0.294, 0.163 | 1.8 | YES | | | SLS-B3-N040506A |
| ***ECBC*** | | | | | | | | | | | | | | | |
| AA61GE-A1 | RF | AA61GE | 0.791 | 0.004 | 0.881 | 0.27% | 0 | 7 | 0.9461 | 10, 1, 0.1, 0.01, 0.001, 0.0001, 0.00001, 0.000001 | 10 | RF | range finder; no points between 0 - 50% | ppt in 2X C1 | SLS-P13 |
| AA61GE-B1 | DF | AA61GE | 1.33 | 0.007 | 0.642 | 6.27% | 2 | 6 | 0.8577 | 5.00, 2.33, 1.08, 0.503, 0.234, 0.109, 0.051, 0.024 | 2.15 | YES | | | SLS-P21 |
| AA61GE-B2 | DF | AA61GE | 2.77 | 0.014 | 0.979 | 1.34% | 1 | 6 | 0.9306 | 5.00, 2.33, 1.08, 0.503, 0.234, 0.109, 0.051, 0.024 | 2.15 | YES | | | SLS-P23 |
| AA61GE-B3 | DF | AA61GE | 0.964 | 0.005 | 0.561 | 1.05% | 2 | 6 | 0.9283 | 5.00, 2.33, 1.08, 0.503, 0.234, 0.109, 0.051, 0.024 | 2.15 | YES | | | SLS-P25 |
| ***FRAME*** | | | | | | | | | | | | | | | |
| FAL.NHK.LB.A1.26.03.04 | RF | AA61LB | 1.13 | 0.006 | 0.805 | 2.56% | 1 | 1 | 0.8822 | 10, 1, 0.1, 0.01, 0.001, 0.0001, 0.00001, 0.000001 | 10 | RF | range finder | | FAL.NHK.SLS.26.03.04 |
| FAL.NHK.LB.B1.25.04.04 | DF | AA61LB | 2.37 | 0.012 | 0.846 | 8.90% | 1 | 3 | 0.9664 | 10.0, 4.65, 2.16, 1.01, 0.468, 0.218, 0.101, 0.047 | 2.15 | YES | | | FAL.NHK.SLS.25.04.04 |
| FAL.NHK.LB.B2.28.04.04 | DF | AA61LB | 2.22 | 0.011 | 0.851 | 4.98% | 3 | 4 | 0.8151 | 10.0, 6.8, 4.63, 3.15, 2.14, 1.46, 0.99, 0.67 | 1.47 | YES | | | FAL.NHK.SLS.28.04.03 |
| FAL.NHK.LB.B3.11.06.04 | DF | AA61LB | 2.18 | 0.011 | 0.975 | 1.63% | 3 | 4 | 0.9221 | 10.0, 6.8, 4.63, 3.15, 2.14, 1.46, 0.99, 0.67 | 1.47 | NO | PC failed | | FAL.NHK.SLS.11.06.04 |
| FAL.NHK.LB.B4.25.06.04 | DF | AA61LB | 1.49 | 0.007 | 1.155 | 0.33% | 1 | 6 | 0.8420 | 10.0, 4.65, 2.16, 1.01, 0.468, 0.218, 0.101, 0.047 | 2.15 | YES | | | FAL.NHK.SLS.25.06.04 |

## TRIPHENYLTIN HYDROXIDE

| | | | | | | | | | | | | | | | |
|---|---|---|---|---|---|---|---|---|---|---|---|---|---|---|---|
| ***IIVS*** | | | | | | | | | | | | | | | |
| A1 | RF | AA61JR | 0.013 | 0.00004 | 0.729 | 1.45% | 2 | 1 | 0.9887 | 10, 1, 0.1, 0.01, 0.001, 0.0001, 0.00001, 0.000001 | 10 | RF | range finder | | SLS-A2-N040320B |
| B1 | DF | AA61JR | 0.015 | 0.00004 | 0.602 | 4.32% | 2 | 0 | 0.9758 | 1.00, 0.556, 0.309, 0.171, 0.095, 0.053, 0.029, 0.016 | 1.8 | NO | no points between 50 - 100% | | SLS-B1-N040423A |
| B2 | DF | AA61JR | 0.015 | 0.00004 | 0.630 | 3.36% | 2 | 0 | 0.9907 | 1.00, 0.556, 0.309, 0.171, 0.095, 0.053, 0.029, 0.016 | 1.8 | NO | no points between 50 - 100% | | SLS-B2-N040424A |
| B3 | DF | AA61JR | 0.012 | 0.00003 | 0.485 | 9.45% | 3 | 2 | 0.9779 | 0.067, 0.045, 0.030, 0.020, 0.0132, 0.0088, 0.0059, 0.0039 | 1.5 | YES | | | SLS-B3-N040506A |
| B4 | DF | AA61JR | 0.012 | 0.00003 | 0.658 | 0.37% | 4 | 3 | 0.9917 | 0.067, 0.045, 0.030, 0.020, 0.013, 0.0088, 0.0059, 0.0039 | 1.5 | YES | | | SLS-B8-N040819A |
| B5 | DF | AA61JR | 0.014 | 0.00004 | 0.610 | 0.07% | 3 | 4 | 0.9907 | 0.067, 0.045, 0.030, 0.020, 0.013, 0.0088, 0.0059, 0.0039 | 1.5 | YES | | | SLS-B9-N040820A |
| ***ECBC*** | | | | | | | | | | | | | | | |
| AA61LL-A1 | RF | AA61LL | 0.015 | 0.00004 | 0.542 | 3.67% | 0 | 2 | 0.9880 | 10, 1, 0.1, 0.01, 0.001, 0.0001, 0.00001, 0.000001 | 10 | RF | range finder | | SLS-P5 |

# NHK NRU Reference Substance Data

| Experiment ID NHK Cells | Assay Type[1] | Substance ID | $IC_{50}$ (ug/mL) | $IC_{50}$ (mM) | Mean VC OD[2] | Difference of right/left VC from mean VC[3] | Number of Points 0 - 50 %[4] | Number of Points 50 - 100 %[5] | $R^2$ [6] | Exposure Concentrations (ug/mL)[7] | Dilution Factor[8] | Acceptable Tests[9] | Rationale for Unacceptability | Notes | PC ID |
|---|---|---|---|---|---|---|---|---|---|---|---|---|---|---|---|
| AA61LL-B1 | DF | AA61LL | 0.021 | 0.00006 | 1.065 | 0.78% | 4 | 4 | 0.9633 | 0.080, 0.054, 0.037, 0.025, 0.017, 0.012, 0.008, 0.005 | 1.47 | YES | | | SLS-P22 |
| AA61LL-B2 | DF | AA61LL | 0.015 | 0.00004 | 0.599 | 0.01% | 4 | 3 | 0.9832 | 0.080, 0.054, 0.037, 0.025, 0.017, 0.012, 0.008, 0.005 | 1.47 | YES | | | SLS-P25 |
| AA61LL-B3 | DF | AA61LL | 0.029 | 0.00008 | 0.987 | 5.68% | 3 | 4 | 0.9754 | 0.080, 0.054, 0.037, 0.025, 0.017, 0.012, 0.008, 0.005 | 1.47 | YES | | | SLS-P27 |
| ***FRAME*** | | | | | | | | | | | | | | | |
| FAL.NHK.GG.A1.26.03.04 | RF | AA61GG | 0.010 | 0.00003 | 0.616 | 6.20% | 2 | 0 | 0.8151 | 10.0, 1.0, 0.1, 0.01, 0.001, 0.0001, 0.00001, 0.000001 | 10 | RF | range finder | ppt in 1X C1 | FAL.NHK.SLS.26.03.04 |
| FAL.NHK.GG.A2.25.04.04 | DF | AA61GG | NA | NA | 0.052 | 12.10% | 2 | 6 | NA | 0.1, 0.0465, 0.0216, 0.0101, 0.0047, 0.0022, 0.0010, 0.0005 | 2.15 | NO | wrong desorb solution used in NRU; SD rejects this test | ppt in 1X C1 | FAL.NHK.SLS.25.04.04 |
| FAL.NHK.GG.B1.28.04.04 | DF | AA61GG | 0.002 | 0.00001 | 0.877 | 1.40% | 5 | 2 | 0.9884 | 0.100, 0.047, 0.022, 0.010, 0.005, 0.002, 0.001, 0.0005 | 2.15 | YES | | | FAL.NHK.SLS.28.04.03 |
| FAL.NHK.GG.B2.13.05.04 | DF | AA61GG | 0.003 | 0.00001 | 0.701 | 2.72% | 2 | 3 | 0.9701 | 0.1, 0.0465, 0.0216, 0.0101, 0.0047, 0.0022, 0.0010, 0.0005 | 2.15 | YES | | | FAL.NHK.SLS.13.05.04 |
| FAL.NHK.GG.B3.10.06.04 | DF | AA61GG | 0.015 | 0.00004 | 0.894 | 5.53% | 3 | 2 | 0.9727 | 0.100, 0. 68, 0.0463, 0.0315, 0.0214, 0.0146, 0.0099, 0.0067 | 1.47 | YES | | | FAL.NHK.SLS.10.06.04 |

## VALPROIC ACID

| | | | | | | | | | | | | | | | |
|---|---|---|---|---|---|---|---|---|---|---|---|---|---|---|---|
| ***IIVS*** | | | | | | | | | | | | | | | |
| A1 | RF | AA61MZ | 710 | 4.921 | 0.730 | 0.79% | 1 | 2 | 0.9232 | 1000, 100, 10, 1, 0.1, 0.01, 0.001, 0.0001 | 10 | RF | range finder | | SLS-A2-N040320B |
| B1 | DF | AA61MZ | 394 | 2.735 | 0.633 | 8.35% | 4 | 4 | 0.9086 | 2500, 1563, 977, 610, 381, 238, 149, 93.1 | 1.6 | YES | | | SLS-B8-N040819A |
| B2 | DF | AA61MZ | 512 | 3.548 | 0.676 | 4.33% | 3 | 5 | 0.9566 | 2500, 1563, 977, 610, 381, 238, 149, 93.1 | 1.6 | YES | | | SLS-B9-N040820A |
| B3 | DF | AA61MZ | 383 | 2.655 | 0.657 | 7.25% | 3 | 4 | 0.9436 | 2500, 1563, 977, 610, 381, 238, 149, 93.1 | 1.6 | YES | | | SLS-B10-N040903A |
| ***ECBC*** | | | | | | | | | | | | | | | |
| AA61JJ-A1 | RF | AA61JJ | 406 | 2.812 | 0.953 | 4.71% | 1 | 1 | 0.9319 | 1000, 100, 10, 1, 0.1, 0.01, 0.001, 0.0001 | 10 | RF | range finder | | SLS-P15 |
| AA61JJ-B1 | DF | AA61JJ | 575 | 3.991 | 0.920 | 0.13% | 2 | 4 | 0.9458 | 1861, 865, 403, 187, 87.1, 40.5, 18.8, 8.8 | 2.15 | YES | | | SLS-P27 |
| AA61JJ-B2 | DF | AA61JJ | 484 | 3.358 | 0.963 | 0.38% | 2 | 4 | 0.9533 | 2000, 930, 433, 201, 93.6, 43.5, 20.2, 9.4 | 2.15 | YES | | ppt in 2X C1-C2; oily | SLS-P29 |
| AA61JJ-B3 | DF | AA61JJ | 344 | 2.383 | 0.717 | 0.17% | 2 | 6 | 0.9570 | 2000, 930, 433, 201, 93.6, 43.5, 20.2, 9.4 | 2.15 | YES | | ppt in 2X C1; oily | SLS-P30 |
| ***FRAME*** | | | | | | | | | | | | | | | |
| FAL.NHK.GK.A1.25.03.04 | RF | AA61GK | NA | NA | 0.666 | 0.25% | 0 | 0 | NA | 2000, 200, 20, 2, 0.2, 0.02, 0.002, 0.0002 | 10 | RF | range finder | | FAL.NHK.SLS.25.03.03 |
| FAL.NHK.GK.B1.25.04.04 | DF | AA61GK | 757 | 5.248 | 0.874 | 6.22% | 3 | 5 | 0.8798 | 2500, 1701, 1157, 787, 535, 364, 248, 169 | 1.47 | YES | | | FAL.NHK.SLS.25.04.04 |
| FAL.NHK.GK.B2.28.04.04 | DF | AA61GK | 828 | 5.742 | 0.735 | 2.30% | 3 | 5 | 0.8571 | 2500, 1701, 1157, 787,535, 364, 248, 169 | 1.47 | YES | | ppt in 2X C1 | FAL.NHK.SLS.28.04.03 |
| FAL.NHK.GK.B2.13.05.04 (should be B3) | DF | AA61GK | 522 | 3.623 | 0.778 | 1.46% | 2 | 3 | 0.9880 | 2500, 1163, 541, 252, 117, 54.4, 25.3, 11.8 | 2.15 | YES | | | FAL.NHK.SLS.13.05.04 |

## VERAPAMIL HCL

| | | | | | | | | | | | | | | | |
|---|---|---|---|---|---|---|---|---|---|---|---|---|---|---|---|
| ***IIVS*** | | | | | | | | | | | | | | | |
| A1 | RF | AA61NH | 78.3 | 0.160 | 0.566 | 5.81% | 1 | 0 | 0.8763 | 100, 10, 1, 0.1, 0.01, 0.001, 0.0001, 0.00001 | 10 | RF | range finder; no points between 50 - 100% | SD chose to use bottom = 0 instead of bottom > 0; | SLS-A4-N040331N |

# NHK NRU Reference Substance Data

| Experiment ID NHK Cells | Assay Type[1] | Substance ID | $IC_{50}$ (ug/mL) | $IC_{50}$ (mM) | Mean VC OD[2] | Difference of right/left VC from mean VC[3] | Number of Points 0 - 50 %[4] | Number of Points 50 - 100 %[5] | $R^2$ [6] | Exposure Concentrations (ug/mL)[7] | Dilution Factor[8] | Acceptable Tests[9] | Rationale for Unacceptability | Notes | PC ID |
|---|---|---|---|---|---|---|---|---|---|---|---|---|---|---|---|
| B1 | DF | AA61NH | 67.5 | 0.137 | 0.656 | 5.17% | 4 | 4 | 0.9864 | 200, 143, 102, 72.9, 52.1, 37.2, 26.6, 19.0 | 1.4 | YES | | | SLS-B8-N040819A |
| B2 | DF | AA61NH | 71.0 | 0.144 | 0.669 | 0.10% | 4 | 3 | 0.9788 | 200, 143, 102, 72.9, 52.1, 37.2, 26.6, 19.0 | 1.4 | YES | | | SLS-B9-N040820A |
| B3 | DF | AA61NH | 60.1 | 0.122 | 0.577 | 7.59% | 3 | 4 | 0.9794 | 200, 143, 102, 72.9, 52.1, 37.2, 26.6, 19.0 | 1.4 | YES | | | SLS-B10-N040903A |
| ***ECBC*** | | | | | | | | | | | | | | | |
| AA61LY-A1 | RF | AA61LY | 64.6 | 0.131 | 0.423 | 5.73% | 2 | 3 | 0.9492 | 1000, 100, 10, 1, 0.1, 0.01, 0.001, 0.0001 | 10 | RF | range finder | ppt in 2X C1 | SLS-P17 |
| AA61LY-B1 | DF | AA61LY | 65.3 | 0.133 | 0.821 | 0.23% | 4 | 4 | 0.9735 | 800, 372, 173, 80.5, 37.4, 17.4, 8.1, 3.8 | 2.15 | YES | | | SLS-P33 |
| AA61LY-B2 | DF | AA61LY | 71.0 | 0.144 | 0.861 | 1.55% | 4 | 4 | 0.9820 | 800, 372, 173, 80.5, 37.4, 17.4, 8.1, 3.8 | 2.15 | YES | | ppt in 2X C1 | SLS-P35 |
| AA61LY-B3 | DF | AA61LY | 45.2 | 0.092 | 0.455 | 1.81% | 3 | 4 | 0.9523 | 800, 372, 173, 80.5, 37.4, 17.4, 8.1, 3.8 | 2.15 | YES | | ppt in 2X C1 | SLS-P37 |
| ***FRAME*** | | | | | | | | | | | | | | | |
| FAL.NHK.MC.A1.28.07.04 | RF | AA61MC | 81.1 | 0.165 | 0.070 | 23.68% | 2 | 1 | 0.6033 | 1000, 100, 10, 1, 0.1, 0.01, 0.001, 0.0001 | 10 | RF | range finder; % VC difference > 15 | | FAL.NHK.SLS.28.07.04 |
| FAL.NHK.MC.B1.20.08.04 | DF | AA61MC | 73.3 | 0.149 | 0.892 | 3.87% | 1 | 4 | 0.9216 | 1500, 698, 325, 151, 70.2, 32.7, 15.2, 7.06 | 2.15 | YES | | ppt in 2X C1-C3; outliers removed by SD | FAL.NHK.SLS.20.08.04 |
| FAL.NHK.MC.B2.08.10.04 | DF | AA61MC | 50.0 | 0.102 | 0.728 | 0.31% | 3 | 3 | 0.9778 | 1500, 698, 325, 151, 70.2, 32.7, 15.2, 7.06 | 2.15 | YES | | ppt in 2X C1 | FAL.NHK.SLS.08.10.03 |
| FAL.NHK.MC.B3.20.10 .04 | DF | AA61MC | 115 | 0.233 | 1.206 | 5.67% | 1 | 2 | 0.9892 | 1500, 698, 325, 151, 70.2, 32.7, 15.2, 7.06 | 2.15 | YES | | | FAL.NHK.SLS.20.10.04 |

## XYLENE

| | | | | | | | | | | | | | | | |
|---|---|---|---|---|---|---|---|---|---|---|---|---|---|---|---|
| ***IIVS*** | | | | | | | | | | | | | | | |
| A1 | RF | AA61MA | 871 | 8.203 | 0.746 | 0.09% | 1 | 0 | 0.8848 | 1000, 100, 10, 1, 0.1, 0.01, 0.001, 0.0001 | 10 | RF | range finder | | SLS-A3-N040331A |
| B1 | DF | AA61MA | 374 | 3.524 | 0.700 | 5.04% | 3 | 2 | 0.7194 | 2000, 1429, 1020, 729, 521, 372, 266, 190 | 1.4 | YES | | well-to-well variability in 3 lowest doses observed | SLS-B8-N040819A |
| B2 | DF | AA61MA | 700 | 6.592 | 0.660 | 6.57% | 2 | 3 | 0.7739 | 2000, 1429, 1020, 729, 521, 372, 266, 190 | 1.4 | YES | | ppt in 2X C1-C3; variability in 4 highest doses observed; top 2 doses not included in the Hill analysis | SLS-B9-N040820A |
| B3 | DF | AA61MA | 385 | 3.631 | 0.629 | 2.40% | 2 | 2 | 0.8182 | 2000, 1429, 1020, 729, 521, 372, 266, 190 | 1.4 | YES | | ppt in 2X C1-C4; variability in 7 highest doses observed;Top dose not included in Hill analysis (SD decision) | SLS-B10-N040903A |
| ***ECBC*** | | | | | | | | | | | | | | | |
| AA61GM-A1 | RF | AA61GM | 164 | 1.545 | 1.075 | 3.37% | 0 | 5 | 0.9337 | 1000, 100, 10, 1, 0.1, 0.01, 0.001, 0.0001 | 10 | RF | range finder; no points between 0 - 50% | ppt in 2X C1 | SLS-P13 |
| AA61GM-B1 | DF | AA61GM | NA | NA | 1.106 | 0.20% | 0 | 8 | NA | 800, 544, 370, 252, 171, 117, 79.3, 53.9 | 1.47 | NO | no points between 0 - 50% | | SLS-P47 |
| AA61GM-B2 | DF | AA61GM | NA | NA | 0.675 | 0.96% | 0 | 5 | NA | 2000, 1361, 926, 630, 428, 291, 198, 135 | 1.47 | NO | no points between 0 - 50% | ppt in 2X C1-C5 | SLS-P49 |
| AA61GM-B3 | DF | AA61GM | NA | NA | 0.699 | 4.39% | 0 | 4 | NA | 4000, 3306, 2732, 2258, 1866, 1542, 1275, 1053 | 1.21 | NO | no points between 0 - 50% | ppt in 2X C1-C8; no toxicity detected | SLS-P53 |
| ***FRAME*** | | | | | | | | | | | | | | | |
| FAL.NHK.JG.A1.14.05.04 | RF | AA61JG | NA | NA | 0.725 | 2.43% | 0 | 0 | NA | 1000, 100, 10, 1, 0.1, 0.01, 0.001, 0.0001 | 10 | RF | range finder; no points between 0 - 100% | | FAL.NHK.SLS.14.05.03 |
| FAL.NHK.JG.B1.08.10.04 | DF | AA61JG | NA | NA | 0.834 | 13.03% | 0 | 7 | 0.3835 | 2500, 1701, 1157, 787, 535, 364, 248, 169 | 1.47 | NO | no points between 0 - 50% | | FAL.NHK.SLS.08.10.03 |

# NHK NRU Reference Substance Data

| Experiment ID NHK Cells | Assay Type[1] | Substance ID | $IC_{50}$ (ug/mL) | $IC_{50}$ (mM) | Mean VC OD[2] | Difference of right/left VC from mean VC[3] | Number of Points 0 - 50 %[4] | Number of Points 50 - 100 %[5] | $R^2$ [6] | Exposure Concentrations (ug/mL)[7] | Dilution Factor[8] | Acceptable Tests[9] | Rationale for Unacceptability | Notes | PC ID |
|---|---|---|---|---|---|---|---|---|---|---|---|---|---|---|---|
| FAL.NHK.JG.B2.22.10.04 | DF | AA61JG | 3130 | 29.444 | 0.798 | 7.28% | 0 | 6 | 0.6066 | 2500, 1701, 1157, 787, 535, 364, 248, 169 | 1.47 | NO | no points between 0 - 50% | | FAL.NHK.SLS.22.10.04 (NB) |
| FAL.NHK.JG.B3.28.10.04 | DF | AA61JG | NA | NA | 0.559 | 1.04% | 0 | 0 | NA | 2500, 1701, 1157, 787, 535, 364, 248, 169 | 1.47 | NO | no points between 0 - 100% | | FAL.NHK.SLS.28.10.04 |

Abbreviations: ppt=Precipitate; SD=Study Director; RF=Range Finder; DF=Definitive Test; PC=Positive Control; C1 - C8=Concentration series applied to the the cells. C1 is the highest concentration and C8 is lowest; NA=Not Available; RC=Registry of Cytotoxicity; 2X=Two times the concentration applied to the cells; VC=Vehicle Control; R2=Coefficient of Determination; OD=Optical Density; ID=Identification. Substance ID was the code assigned by the chemical distributor (BioReliance Corp.). Experiment ID and PC ID are test identification numbers assigned by the cytotoxicity testing laboratory.

[1] Range finder or definitive test
[2] Mean OD value for all VC wells in test plate
[3] Difference of right and left VC column of wells in the test plate
[4] % Viability values between 0 and 50% viability; test acceptance criterion. Phase Ib used the range of 10 -50%.
[5] % Viability values between 50 and 100% viability; test acceptance criterion. Phase Ib used the range of 50 - 90%.
[6] Calculated value from the Prism® software
[7] Reference substance concentrations applied to the cells
[8] Step-wise dilution factor used to determine reference substance exposure concentrations
[9] Determination for whether test meets or doesn't meet test acceptance criteria; not applied to RF tests
Shaded boxes identify values that do not meet the specific test acceptance criteria

# Appendix I3

## 3T3 NRU Positive Control (SLS) Data

***[This Page Intentionally Left Blank]***

## 3T3 NRU Positive Control (SLS) Data

| Experiment ID[1] 3T3 Cells | $IC_{50}$ (ug/mL) | $IC_{50}$ (mM) | Reference Substance Application Date | Mean VC OD[2] | Difference of right/left VC from mean VC[3] | Number of Points 0 - 50 %[4] | Number of Points 50 - 100 %[5] | $R^2$ [6] | Exposure Concentrations (ug/mL)[7] | Dilution Factor[8] | Acceptable Tests[9] | Rationale for Unacceptability |
|---|---|---|---|---|---|---|---|---|---|---|---|---|
| **ECBC** | | | | | | | | | | | | |
| **Phase Ia** | | | | | | | | | | | | |
| SLS-B1 | 45.2 | 0.157 | 13-Aug-02 | 0.187 | 17.06% | 1 | 1 | 0.8361 | 100, 68, 46.3, 31.5, 21.4, 14.6, 9.9, 6.7 | 1.47 | NO | VC difference > 15%. |
| SLS-B2 | 40.4 | 0.140 | 27-Aug-02 | 0.385 | 3.88% | 3 | 4 | 0.7841 | 100, 68, 46.3, 31.5, 21.4, 14.6, 9.9, 6.7 | 1.47 | NO | Inadequate curve fit. |
| SLS-B3 | 38.6 | 0.134 | 27-Aug-02 | 0.410 | 0.04% | 1 | 5 | 0.8376 | 100, 68, 46.3, 31.5, 21.4, 14.6, 9.9, 6.7 | 1.47 | YES | |
| SLS-B4 | 33.3 | 0.116 | 28-Aug-02 | 0.288 | 15.91% | 1 | 2 | 0.9378 | 100, 68, 46.3, 31.5, 21.4, 14.6, 9.9, 6.7 | 1.47 | NO | VC difference > 15%. |
| SLS-B5 | 26.6 | 0.092 | 28-Aug-02 | 0.233 | 4.43% | 2 | 4 | 0.8086 | 100, 68, 46.3, 31.5, 21.4, 14.6, 9.9, 6.7 | 1.47 | NO | Inadequate curve fit. |
| SLS-B6 (25 ug/ml NR 1 hr) | 39.5 | 0.137 | 4-Sep-02 | 0.255 | 7.59% | 1 | 2 | 0.9621 | 100, 68, 46.3, 31.5, 21.4, 14.6, 9.9, 6.7 | 1.47 | NO | R&D: 3 replicate ODs/concentration |
| SLS-B7 (50 ug/ml NR 1 hr) | 39.1 | 0.136 | 4-Sep-02 | 0.330 | 3.18% | 1 | 2 | 0.9749 | 100, 68, 46.3, 31.5, 21.4, 14.6, 9.9, 6.7 | 1.47 | NO | R&D: 3 replicate ODs/concentration |
| SLS-B8 (25 ug/ml NR 3 hr) | 36.5 | 0.126 | 4-Sep-02 | 0.508 | 3.64% | 1 | 3 | 0.9639 | 100, 68, 46.3, 31.5, 21.4, 14.6, 9.9, 6.7 | 1.47 | NO | R&D: 3 replicate ODs/concentration |
| SLS-B9 (50 ug/ml NR 3 hr) | 33.1 | 0.115 | 4-Sep-02 | 0.457 | 1.39% | 1 | 4 | 0.9678 | 100, 68, 46.3, 31.5, 21.4, 14.6, 9.9, 6.7 | 1.47 | NO | R&D: 3 replicate ODs/concentration |
| SLS-B11 | 42.9 | 0.149 | 9-Sep-02 | 0.349 | 6.33% | 1 | 2 | 0.9332 | 100, 68, 46.3, 31.5, 21.4, 14.6, 9.9, 6.7 | 1.47 | YES | |
| SLS-B12 | 35.3 | 0.123 | 10-Sep-02 | 0.326 | 5.41% | 1 | 3 | 0.9211 | 100, 68, 46.3, 31.5, 21.4, 14.6, 9.9, 6.7 | 1.47 | YES | |
| SLS-B13 | 33.0 | 0.114 | 10-Sep-02 | 0.414 | 6.50% | 1 | 4 | 0.8802 | 100, 68, 46.3, 31.5, 21.4, 14.6, 9.9, 6.7 | 1.47 | YES | |
| SLS-B14 (33 ug/ml NR) | 37.6 | 0.130 | 11-Sep-02 | 0.347 | 1.97% | 1 | 3 | 0.9241 | 100, 68, 46.3, 31.5, 21.4, 14.6, 9.9, 6.7 | 1.47 | YES | |
| SLS-B15 (33 ug/ml NR) | 42.8 | 0.148 | 11-Sep-02 | 0.303 | 3.16% | 1 | 1 | 0.8408 | 100, 68, 46.3, 31.5, 21.4, 14.6, 9.9, 6.7 | 1.47 | NO | Inadequate curve fit. |
| SLS-B16 (33 ug/ml NR) | 34.8 | 0.121 | 11-Sep-02 | 0.345 | 3.43% | 1 | 2 | 0.9770 | 100, 68, 46.3, 31.5, 21.4, 14.6, 9.9, 6.7 | 1.47 | YES | |
| SLS-B17 (33 ug/ml NR) | 34.3 | 0.119 | 11-Sep-02 | 0.389 | 17.94% | 0 | 4 | 0.8377 | 100, 68, 46.3, 31.5, 21.4, 14.6, 9.9, 6.7 | 1.47 | NO | VC difference > 15%. No points between 10 & 50%. |
| SLS-B18 | 39.2 | 0.136 | 17-Sep-02 | 0.430 | 7.88% | 1 | 2 | 0.9472 | 100, 68, 46.3, 31.5, 21.4, 14.6, 9.9, 6.7 | 1.47 | YES | |
| SLS-B19 | 44.7 | 0.155 | 17-Sep-02 | 0.422 | 13.89% | 1 | 1 | 0.9389 | 100, 68, 46.3, 31.5, 21.4, 14.6, 9.9, 6.7 | 1.47 | YES | |
| SLS-B20 | 34.8 | 0.121 | 17-Sep-02 | 0.445 | 4.12% | 1 | 3 | 0.9364 | 100, 68, 46.3, 31.5, 21.4, 14.6, 9.9, 6.7 | 1.47 | YES | |
| SLS-B21 | 38.6 | 0.134 | 17-Sep-02 | 0.402 | 1.66% | 1 | 3 | 0.8969 | 100, 68, 46.3, 31.5, 21.4, 14.6, 9.9, 6.7 | 1.47 | YES | |
| SLS-B22 | 43.5 | 0.151 | 18-Sep-02 | 0.394 | 2.94% | 1 | 1 | 0.9271 | 100, 68, 46.3, 31.5, 21.4, 14.6, 9.9, 6.7 | 1.47 | YES | |

## 3T3 NRU Positive Control (SLS) Data

| Experiment ID[1] 3T3 Cells | $IC_{50}$ (ug/mL) | $IC_{50}$ (mM) | Reference Substance Application Date | Mean VC OD[2] | Difference of right/left VC from mean VC[3] | Number of Points 0 - 50 %[4] | Number of Points 50 - 100 %[5] | $R^2$ [6] | Exposure Concentrations (ug/mL)[7] | Dilution Factor[8] | Acceptable Tests[9] | Rationale for Unacceptability |
|---|---|---|---|---|---|---|---|---|---|---|---|---|
| SLS-B23 | 39.7 | 0.138 | 18-Sep-02 | 0.423 | 1.71% | 1 | 2 | 0.9253 | 100, 68, 46.3, 31.5, 21.4, 14.6, 9.9, 6.7 | 1.47 | YES | |
| SLS-B24 | 45.6 | 0.158 | 18-Sep-02 | 0.283 | 10.48% | 0 | 2 | 0.8502 | 100, 68, 46.3, 31.5, 21.4, 14.6, 9.9, 6.7 | 1.47 | NO | No points between 10 & 50%. |
| SLS-B25 | 44.6 | 0.155 | 18-Sep-02 | 0.311 | 13.03% | 1 | 0 | 0.8784 | 100, 68, 46.3, 31.5, 21.4, 14.6, 9.9, 6.7 | 1.47 | NO | No points between 50 & 90%. |
| **Phase Ib** | | | | | | | | | | | | |
| ECBC-3T3-Ib-01 SLS-P1 | 34.0 | 0.118 | 22-Jan-03 | 0.300 | 2.23% | 1 | 3 | 0.9245 | 100, 68, 46.3, 31.5, 21.4, 14.6, 9.9, 6.7 | 1.47 | YES | |
| ECBC-3T3-Ib-01 SLS-P2 | 31.3 | 0.109 | 22-Jan-03 | 0.214 | 2.18% | 1 | 4 | 0.8744 | 100, 68, 46.3, 31.5, 21.4, 14.6, 9.9, 6.7 | 1.47 | YES | |
| ECBC-3T3-Ib-02 SLS-P3 | 13.2 | 0.046 | 29-Jan-03 | 0.270 | 23.27% | 2 | 3 | 0.8703 | 100, 68, 46.3, 31.5, 21.4, 14.6, 9.9, 6.7 | 1.47 | NO | VC difference > 15%; IC50 out of range |
| ECBC-3T3-Ib-03 SLS-P4 | 56.1 | 0.195 | 4-Feb-03 | 0.438 | 7.34% | 1 | 2 | 0.8206 | 100, 68, 46.3, 31.5, 21.4, 14.6, 9.9, 6.7 | 1.47 | NO | IC50 out of range |
| ECBC-3T3-Ib-04 SLS-P5 | 43.0 | 0.149 | 25-Feb-03 | 0.750 | 3.31% | 1 | 1 | 0.9827 | 100, 68, 46.3, 31.5, 21.4, 14.6, 9.9, 6.7 | 1.47 | YES | |
| ECBC-3T3-Ib-05 SLS-P7 | 40.8 | 0.141 | 26-Feb-03 | 0.443 | 6.47% | 1 | 1 | 0.9702 | 100, 68, 46.3, 31.5, 21.4, 14.6, 9.9, 6.7 | 1.47 | YES | |
| ECBC-3T3-Ib-06 SLS-P9 | 44.9 | 0.156 | 4-Mar-03 | 0.450 | 3.57% | 1 | 1 | 0.9403 | 100, 68.0, 46.3, 31.5, 21.4, 14.6, 9.9, 6.7 | 1.47 | YES | |
| ECBC-3T3-Ib-07 SLS-P12 | 37.3 | 0.129 | 11-Mar-03 | 0.568 | 10.54% | 1 | 4 | 0.9314 | 80.0, 66.1, 54.6, 45.2, 37.3, 30.8, 25.5, 21.1 | 1.21 | YES | |
| ECBC-3T3-Ib-08 SLS-P13 | 47.2 | 0.164 | 18-Mar-03 | 0.517 | 6.58% | 1 | 1 | 0.9566 | 80.0, 66.1, 54.6, 45.2, 37.3, 30.8, 25.5, 21.1 | 1.21 | YES | |
| **Phase II** | | | | | | | | | | | | |
| SLS-P1 | 41.4 | 0.144 | 17-Jun-03 | 0.409 | 4.01% | 3 | 3 | 0.9561 | 80, 66.1, 54.6, 45.2, 37.3, 30.8, 25.5, 21.1 | 1.21 | YES | |
| SLS-P2 | 36.1 | 0.125 | 17-Jun-03 | 0.452 | 16.14% | 3 | 4 | 0.9411 | 80, 66.1, 54.6, 45.2, 37.3, 30.8, 25.5, 21.1 | 1.21 | NO | % VC difference > 15 |
| SLS-P3 | 44.5 | 0.154 | 24-Jun-03 | 0.427 | 8.32% | 3 | 3 | 0.9434 | 80, 66.1, 54.6, 45.2, 37.3, 30.8, 25.5, 21.1 | 1.21 | YES | |
| SLS-P4 | 39.5 | 0.137 | 24-Jun-03 | 0.460 | 0.14% | 3 | 4 | 0.9202 | 80, 66.1, 54.6, 45.2, 37.3, 30.8, 25.5, 21.1 | 1.21 | YES | |
| SLS-P5 | 44.2 | 0.153 | 1-Jul-03 | 0.619 | 2.60% | 3 | 4 | 0.9365 | 80, 66.1, 54.6, 45.2, 37.3, 30.8, 25.5, 21.1 | 1.21 | YES | |
| SLS-P6 | 37.8 | 0.131 | 1-Jul-03 | 0.563 | 3.20% | 2 | 4 | 0.9361 | 80, 66.1, 54.6, 45.2, 37.3, 30.8, 25.5, 21.1 | 1.21 | YES | |
| SLS-P7 | 42.1 | 0.146 | 8-Jul-03 | 0.485 | 5.48% | 1 | 5 | 0.9162 | 80, 66.1, 54.6, 45.2, 37.3, 30.8, 25.5, 21.1 | 1.21 | YES | |
| SLS-P8 | 41.5 | 0.144 | 8-Jul-03 | 0.630 | 4.97% | 2 | 4 | 0.9461 | 80, 66.1, 54.6, 45.2, 37.3, 30.8, 25.5, 21.1 | 1.21 | YES | |
| SLS-P9 | 40.3 | 0.140 | 15-Jul-03 | 0.450 | 6.36% | 1 | 5 | 0.9250 | 80, 66.1, 54.6, 45.2, 37.3, 30.8, 25.5, 21.1 | 1.21 | YES | |

## 3T3 NRU Positive Control (SLS) Data

| Experiment ID[1] 3T3 Cells | $IC_{50}$ (ug/mL) | $IC_{50}$ (mM) | Reference Substance Application Date | Mean VC OD[2] | Difference of right/left VC from mean VC[3] | Number of Points 0 - 50 %[4] | Number of Points 50 - 100 %[5] | $R^2$ [6] | Exposure Concentrations (ug/mL)[7] | Dilution Factor[8] | Acceptable Tests[9] | Rationale for Unacceptability |
|---|---|---|---|---|---|---|---|---|---|---|---|---|
| SLS-P10 | 35.2 | 0.122 | 15-Jul-03 | 0.629 | 4.12% | 3 | 3 | 0.9751 | 80, 66.1, 54.6, 45.2, 37.3, 30.8, 25.5, 21.1 | 1.21 | YES | |
| SLS-P11 | 38.7 | 0.134 | 22-Jul-03 | 0.488 | 3.70% | 2 | 4 | 0.9769 | 80, 66.1, 54.6, 45.2, 37.3, 30.8, 25.5, 21.1 | 1.21 | YES | |
| SLS-P12 | 39.1 | 0.136 | 22-Jul-03 | 0.554 | 1.92% | 3 | 4 | 0.9760 | 80, 66.1, 54.6, 45.2, 37.3, 30.8, 25.5, 21.1 | 1.21 | YES | |
| SLS-P13 | 41.6 | 0.144 | 29-Jul-03 | 0.700 | 0.18% | 3 | 4 | 0.9440 | 80, 66.1, 54.6, 45.2, 37.3, 30.8, 25.5, 21.1 | 1.21 | YES | |
| SLS-P14 | 40.7 | 0.141 | 29-Jul-03 | 0.730 | 3.11% | 3 | 4 | 0.9663 | 80, 66.1, 54.6, 45.2, 37.3, 30.8, 25.5, 21.1 | 1.21 | YES | |
| SLS-P15 | 43.2 | 0.150 | 5-Aug-03 | 0.649 | 0.59% | 2 | 4 | 0.9591 | 80, 66.1, 54.6, 45.2, 37.3, 30.8, 25.5, 21.1 | 1.21 | YES | |
| SLS-P16 | 44.1 | 0.153 | 6-Aug-03 | 0.276 | 3.23% | 4 | 4 | 0.9790 | 80, 66.1, 54.6, 45.2, 37.3, 30.8, 25.5, 21.1 | 1.21 | YES | |
| SLS-P17 | 37.3 | 0.129 | 31-Aug-03 | 0.710 | 5.38% | 2 | 4 | 0.9482 | 80, 66.1, 54.6, 45.2, 37.3, 30.8, 25.5, 21.1 | 1.21 | YES | |
| SLS-P18 sealer | 32.4 | 0.112 | 31-Aug-03 | 0.545 | 4.39% | 3 | 3 | 0.8897 | 80, 66.1, 54.6, 45.2, 37.3, 30.8, 25.5, 21.1 | 1.21 | NO | R&D |
| SLS-P19 | 41.4 | 0.144 | 1-Sep-03 | 0.613 | 2.00% | 3 | 3 | 0.9625 | 80, 66.1, 54.6, 45.2, 37.3, 30.8, 25.5, 21.1 | 1.21 | YES | |
| SLS-P20 | 38.4 | 0.133 | 9-Sep-03 | 0.350 | 0.88% | 3 | 4 | 0.9350 | 80, 66.1, 54.6, 45.2, 37.3, 30.8, 25.5, 21.1 | 1.21 | YES | |
| SLS-P21 | 43.0 | 0.149 | 23-Sep-03 | 0.650 | 3.04% | 2 | 4 | 0.9637 | 80, 66.1, 54.6, 45.2, 37.3, 30.8, 25.5, 21.1 | 1.21 | YES | |
| SLS-P22 | 41.2 | 0.143 | 29-Oct-03 | 0.406 | 1.21% | 3 | 4 | 0.9289 | 80, 66.1, 54.6, 45.2, 37.3, 30.8, 25.5, 21.1 | 1.21 | YES | |
| SLS-P23 | 41.8 | 0.145 | 4-Nov-03 | 0.378 | 8.20% | 4 | 4 | 0.9577 | 80, 66.1, 54.6, 45.2, 37.3, 30.8, 25.5, 21.1 | 1.21 | YES | |
| SLS-P24 | 44.7 | 0.155 | 5-Nov-03 | 0.333 | 3.43% | 4 | 3 | 0.9518 | 80, 66.1, 54.6, 45.2, 37.3, 30.8, 25.5, 21.1 | 1.21 | YES | |
| **Phase III** | | | | | | | | | | | | |
| SLS-P1 | 37.5 | 0.130 | 13-Jan-04 | 0.355 | 3.82% | 3 | 3 | 0.8860 | 80.0, 66.1, 54.6, 45.2, 37.3, 30.8, 25.5, 21.1 | 1.21 | YES | |
| SLS-P2 | 34.9 | 0.121 | 13-Jan-04 | 0.442 | 8.96% | 3 | 3 | 0.9641 | 80.0, 66.1, 54.6, 45.2, 37.3, 30.8, 25.5, 21.1 | 1.21 | YES | |
| SLS-P3 | 40.8 | 0.142 | 21-Jan-04 | 0.461 | 4.62% | 2 | 3 | 0.9751 | 80.0, 66.1, 54.6, 45.2, 37.3, 30.8, 25.5, 21.1 | 1.21 | YES | |
| SLS-P4 | 29.4 | 0.102 | 21-Jan-04 | 0.511 | 3.62% | 2 | 3 | 0.9672 | 80.0, 66.1, 54.6, 45.2, 37.3, 30.8, 25.5, 21.1 | 1.21 | NO | IC50 out of range |
| SLS-P5 | 43.7 | 0.151 | 27-Jan-04 | 0.299 | 2.09% | 3 | 4 | 0.9766 | 80.0, 66.1, 54.6, 45.2, 37.3, 30.8, 25.5, 21.1 | 1.21 | YES | |

## 3T3 NRU Positive Control (SLS) Data

| Experiment ID[1] 3T3 Cells | $IC_{50}$ (ug/mL) | $IC_{50}$ (mM) | Reference Substance Application Date | Mean VC OD[2] | Difference of right/left VC from mean VC[3] | Number of Points 0 - 50 %[4] | Number of Points 50 - 100 %[5] | $R^2$ [6] | Exposure Concentrations (ug/mL)[7] | Dilution Factor[8] | Acceptable Tests[9] | Rationale for Unacceptability |
|---|---|---|---|---|---|---|---|---|---|---|---|---|
| SLS-P6 | 42.8 | 0.148 | 27-Jan-04 | 0.384 | 1.89% | 2 | 3 | 0.9558 | 80.0, 66.1, 54.6, 45.2, 37.3, 30.8, 25.5, 21.1 | 1.21 | YES | |
| SLS-P7 | 43.1 | 0.149 | 3-Feb-04 | 0.378 | 6.60% | 4 | 4 | 0.9779 | 80.0, 66.1, 54.6, 45.2, 37.3, 30.8, 25.5, 21.1 | 1.21 | YES | |
| SLS-P8 | 38.5 | 0.134 | 3-Feb-04 | 0.379 | 7.38% | 2 | 4 | 0.9662 | 80.0, 66.1, 54.6, 45.2, 37.3, 30.8, 25.5, 21.1 | 1.21 | YES | |
| SLS-P9 | 38.5 | 0.134 | 10-Feb-04 | 0.375 | 8.36% | 3 | 4 | 0.9315 | 80.0, 66.1, 54.6, 45.2, 37.3, 30.8, 25.5, 21.1 | 1.21 | YES | |
| SLS-P10 | 35.9 | 0.124 | 10-Feb-04 | 0.374 | 3.25% | 3 | 4 | 0.9640 | 80.0, 66.1, 54.6, 45.2, 37.3, 30.8, 25.5, 21.1 | 1.21 | YES | |
| SLS-P11 | 40.5 | 0.140 | 24-Feb-04 | 0.297 | 2.83% | 3 | 4 | 0.9554 | 80.0, 66.1, 54.6, 45.2, 37.3, 30.8, 25.5, 21.1 | 1.21 | YES | |
| SLS-P12 | 37.3 | 0.129 | 24-Feb-04 | 0.334 | 0.02% | 2 | 3 | 0.9665 | 80.0, 66.1, 54.6, 45.2, 37.3, 30.8, 25.5, 21.1 | 1.21 | YES | |
| SLS-P13 | 39.3 | 0.136 | 25-Feb-04 | 0.385 | 0.30% | 3 | 4 | 0.9624 | 80.0, 66.1, 54.6, 45.2, 37.3, 30.8, 25.5, 21.1 | 1.21 | YES | |
| SLS-P14 | 37.9 | 0.132 | 25-Feb-04 | 0.422 | 5.43% | 4 | 4 | 0.9561 | 80.0, 66.1, 54.6, 45.2, 37.3, 30.8, 25.5, 21.1 | 1.21 | YES | |
| SLS-P15 | 44.7 | 0.155 | 2-Mar-04 | 0.526 | 3.85% | 2 | 5 | 0.9840 | 80.0, 66.1, 54.6, 45.2, 37.3, 30.8, 25.5, 21.1 | 1.21 | YES | |
| SLS-P16 | 41.9 | 0.145 | 2-Mar-04 | 0.605 | 0.29% | 2 | 4 | 0.9739 | 80.0, 66.1, 54.6, 45.2, 37.3, 30.8, 25.5, 21.1 | 1.21 | YES | |
| SLS-P17 | 38.9 | 0.135 | 3-Mar-04 | 0.453 | 7.56% | 3 | 4 | 0.9496 | 80.0, 66.1, 54.6, 45.2, 37.3, 30.8, 25.5, 21.1 | 1.21 | YES | |
| SLS-P18 | 35.5 | 0.123 | 3-Mar-04 | 0.522 | 0.59% | 3 | 3 | 0.9404 | 80.0, 66.1, 54.6, 45.2, 37.3, 30.8, 25.5, 21.1 | 1.21 | YES | |
| SLS-P19 | 41.3 | 0.143 | 9-Mar-04 | 0.539 | 7.29% | 3 | 4 | 0.9586 | 80.0, 66.1, 54.6, 45.2, 37.3, 30.8, 25.5, 21.1 | 1.21 | YES | |
| SLS-P20 | 37.7 | 0.131 | 9-Mar-04 | 0.535 | 0.73% | 2 | 4 | 0.9731 | 80.0, 66.1, 54.6, 45.2, 37.3, 30.8, 25.5, 21.1 | 1.21 | YES | |
| SLS-P21 | 42.7 | 0.148 | 16-Mar-04 | 0.563 | 0.59% | 2 | 3 | 0.9849 | 80.0, 66.1, 54.6, 45.2, 37.3, 30.8, 25.5, 21.1 | 1.21 | YES | |

## 3T3 NRU Positive Control (SLS) Data

| Experiment ID[1] 3T3 Cells | $IC_{50}$ (ug/mL) | $IC_{50}$ (mM) | Reference Substance Application Date | Mean VC OD[2] | Difference of right/left VC from mean VC[3] | Number of Points 0 - 50 %[4] | Number of Points 50 - 100 %[5] | $R^2$ [6] | Exposure Concentrations (ug/mL)[7] | Dilution Factor[8] | Acceptable Tests[9] | Rationale for Unacceptability |
|---|---|---|---|---|---|---|---|---|---|---|---|---|
| SLS-P22 | 38.9 | 0.135 | 16-Mar-04 | 0.548 | 0.03% | 3 | 4 | 0.9759 | 80.0, 66.1, 54.6, 45.2, 37.3, 30.8, 25.5, 21.1 | 1.21 | YES | |
| SLS-P23 | 43.4 | 0.150 | 23-Mar-04 | 0.632 | 3.43% | 3 | 4 | 0.9714 | 80.0, 66.1, 54.6, 45.2, 37.3, 30.8, 25.5, 21.1 | 1.21 | YES | |
| SLS-P24 | 42.1 | 0.146 | 23-Mar-04 | 0.707 | 2.19% | 2 | 4 | 0.9858 | 80.0, 66.1, 54.6, 45.2, 37.3, 30.8, 25.5, 21.1 | 1.21 | YES | |
| SLS-P25 | 52.7 | 0.183 | 30-Mar-04 | 0.667 | 2.75% | 2 | 5 | 0.9661 | 80.0, 66.1, 54.6, 45.2, 37.3, 30.8, 25.5, 21.1 | 1.21 | NO | IC50 out of range |
| SLS-P26 | 43.0 | 0.149 | 30-Mar-04 | 0.623 | 0.88% | 3 | 3 | 0.9556 | 80.0, 66.1, 54.6, 45.2, 37.3, 30.8, 25.5, 21.1 | 1.21 | YES | |
| SLS-P27 | 45.9 | 0.159 | 6-Apr-04 | 0.521 | 2.17% | 2 | 4 | 0.9766 | 80.0, 66.1, 54.6, 45.2, 37.3, 30.8, 25.5, 21.1 | 1.21 | YES | |
| SLS-P28 | 43.9 | 0.152 | 6-Apr-04 | 0.614 | 1.41% | 3 | 4 | 0.9785 | 80.0, 66.1, 54.6, 45.2, 37.3, 30.8, 25.5, 21.1 | 1.21 | YES | |
| SLS-P29 | 46.3 | 0.161 | 13-Apr-04 | 0.477 | 4.37% | 3 | 5 | 0.9579 | 80.0, 66.1, 54.6, 45.2, 37.3, 30.8, 25.5, 21.1 | 1.21 | YES | |
| SLS-P30 | 43.1 | 0.149 | 13-Apr-04 | 0.609 | 1.67% | 1 | 5 | 0.9420 | 80.0, 66.1, 54.6, 45.2, 37.3, 30.8, 25.5, 21.1 | 1.21 | YES | |
| SLS-P31 | 44.1 | 0.153 | 20-Apr-04 | 0.473 | 5.99% | 1 | 5 | 0.9456 | 80.0, 66.1, 54.6, 45.2, 37.3, 30.8, 25.5, 21.1 | 1.21 | YES | |
| SLS-P32 | 39.4 | 0.136 | 20-Apr-04 | 0.481 | 2.79% | 3 | 4 | 0.9762 | 80.0, 66.1, 54.6, 45.2, 37.3, 30.8, 25.5, 21.1 | 1.21 | YES | |
| SLS-P33 | 44.8 | 0.155 | 27-Apr-04 | 0.434 | 8.49% | 2 | 4 | 0.9548 | 80.0, 66.1, 54.6, 45.2, 37.3, 30.8, 25.5, 21.1 | 1.21 | YES | |
| SLS-P34 | 42.1 | 0.146 | 27-Apr-04 | 0.448 | 8.96% | 3 | 4 | 0.9624 | 80.0, 66.1, 54.6, 45.2, 37.3, 30.8, 25.5, 21.1 | 1.21 | YES | |
| SLS-P35 | 49.3 | 0.171 | 4-May-04 | 0.611 | 1.23% | 3 | 4 | 0.9828 | 80.0, 66.1, 54.6, 45.2, 37.3, 30.8, 25.5, 21.1 | 1.21 | YES | |
| SLS-P36 | 42.4 | 0.147 | 4-May-04 | 0.680 | 4.09% | 2 | 4 | 0.9626 | 80.0, 66.1, 54.6, 45.2, 37.3, 30.8, 25.5, 21.1 | 1.21 | YES | |
| SLS-P37 | 44.8 | 0.155 | 11-May-04 | 0.588 | 2.31% | 2 | 5 | 0.9713 | 80.0, 66.1, 54.6, 45.2, 37.3, 30.8, 25.5, 21.1 | 1.21 | YES | |

## 3T3 NRU Positive Control (SLS) Data

| Experiment ID[1] 3T3 Cells | $IC_{50}$ (ug/mL) | $IC_{50}$ (mM) | Reference Substance Application Date | Mean VC OD[2] | Difference of right/left VC from mean VC[3] | Number of Points 0 - 50 %[4] | Number of Points 50 - 100 %[5] | $R^2$ [6] | Exposure Concentrations (ug/mL)[7] | Dilution Factor[8] | Acceptable Tests[9] | Rationale for Unacceptability |
|---|---|---|---|---|---|---|---|---|---|---|---|---|
| SLS-P38 | 43.2 | 0.150 | 11-May-04 | 0.682 | 3.69% | 3 | 4 | 0.9645 | 80.0, 66.1, 54.6, 45.2, 37.3, 30.8, 25.5, 21.1 | 1.21 | YES | |
| SLS-P39 | 37.8 | 0.131 | 18-May-04 | 0.418 | 7.64% | 3 | 4 | 0.9578 | 80.0, 66.1, 54.6, 45.2, 37.3, 30.8, 25.5, 21.1 | 1.21 | YES | |
| SLS-P40 | 37.0 | 0.128 | 18-May-04 | 0.408 | 1.70% | 2 | 4 | 0.9541 | 80.0, 66.1, 54.6, 45.2, 37.3, 30.8, 25.5, 21.1 | 1.21 | YES | |
| SLS-P41 | 45.0 | 0.156 | 25-May-04 | 0.506 | 2.77% | 2 | 5 | 0.9772 | 80.0, 66.1, 54.6, 45.2, 37.3, 30.8, 25.5, 21.1 | 1.21 | YES | |
| SLS-P42 | 42.1 | 0.146 | 25-May-04 | 0.575 | 1.65% | 2 | 4 | 0.9733 | 80.0, 66.1, 54.6, 45.2, 37.3, 30.8, 25.5, 21.1 | 1.21 | YES | |
| SLS-P43 | 42.8 | 0.148 | 15-Jun-04 | 0.698 | 6.20% | 3 | 4 | 0.9689 | 80.0, 66.1, 54.6, 45.2, 37.3, 30.8, 25.5, 21.1 | 1.21 | YES | |
| SLS-P44 | 42.2 | 0.146 | 15-Jun-04 | 0.695 | 8.92% | 4 | 4 | 0.9648 | 80.0, 66.1, 54.6, 45.2, 37.3, 30.8, 25.5, 21.1 | 1.21 | YES | |
| SLS-P45 | 45.9 | 0.159 | 22-Jun-04 | 0.561 | 1.81% | 3 | 5 | 0.9718 | 80.0, 66.1, 54.6, 45.2, 37.3, 30.8, 25.5, 21.1 | 1.21 | YES | |
| SLS-P46 | 46.1 | 0.160 | 22-Jun-04 | 0.650 | 1.33% | 2 | 5 | 0.9772 | 80.0, 66.1, 54.6, 45.2, 37.3, 30.8, 25.5, 21.1 | 1.21 | YES | |
| SLS-P47 | 40.2 | 0.139 | 29-Jun-04 | 0.421 | 8.18% | 4 | 4 | 0.9603 | 80.0, 66.1, 54.6, 45.2, 37.3, 30.8, 25.5, 21.1 | 1.21 | YES | |
| SLS-P48 | 37.6 | 0.130 | 29-Jun-04 | 0.468 | 10.36% | 3 | 4 | 0.9512 | 80.0, 66.1, 54.6, 45.2, 37.3, 30.8, 25.5, 21.1 | 1.21 | YES | |
| SLS-P49 | 40.2 | 0.139 | 13-Jul-04 | 0.325 | 12.65% | 4 | 4 | 0.9524 | 80.0, 66.1, 54.6, 45.2, 37.3, 30.8, 25.5, 21.1 | 1.21 | YES | |
| SLS-P50 | NA | NA | 20-Jul-04 | 0.414 | 4.06% | 1 | 1 | NA | 80.0, 66.1, 54.6, 45.2, 37.3, 30.8, 25.5, 21.1 | 1.21 | NO | IC50 out of range |
| SLS-P51 | NA | NA | 20-Jul-04 | 0.414 | 16.20% | 1 | 5 | NA | 80.0, 66.1, 54.6, 45.2, 37.3, 30.8, 25.5, 21.1 | 1.21 | NO | IC50 out of range; % VC difference > 15; |
| SLS-P52 | NA | NA | 27-Jul-04 | 0.471 | 14.02% | 3 | 1 | NA | 80.0, 66.1, 54.6, 45.2, 37.3, 30.8, 25.5, 21.1 | 1.21 | NO | IC50 out of range |
| SLS-P53 | NA | NA | 27-Jul-04 | 0.555 | 8.43% | 5 | 1 | NA | 80.0, 66.1, 54.6, 45.2, 37.3, 30.8, 25.5, 21.1 | 1.21 | NO | IC50 out of range |

## 3T3 NRU Positive Control (SLS) Data

| Experiment ID[1] 3T3 Cells | $IC_{50}$ (ug/mL) | $IC_{50}$ (mM) | Reference Substance Application Date | Mean VC OD[2] | Difference of right/left VC from mean VC[3] | Number of Points 0 - 50 %[4] | Number of Points 50 - 100 %[5] | $R^2$ [6] | Exposure Concentrations (ug/mL)[7] | Dilution Factor[8] | Acceptable Tests[9] | Rationale for Unacceptability |
|---|---|---|---|---|---|---|---|---|---|---|---|---|
| SLS-P54 | 44.1 | 0.153 | 10-Aug-04 | 0.797 | 1.55% | 3 | 5 | 0.9653 | 80.0, 66.1, 54.6, 45.2, 37.3, 30.8, 25.5, 21.1 | 1.21 | YES | |
| SLS-P55 | 45.1 | 0.156 | 10-Aug-04 | 0.658 | 5.46% | 3 | 4 | 0.9570 | 80.0, 66.1, 54.6, 45.2, 37.3, 30.8, 25.5, 21.1 | 1.21 | YES | |
| SLS-P56 | NA | NA | 17-Aug-04 | 0.372 | 34.25% | 2 | 5 | NA | 80.0, 66.1, 54.6, 45.2, 37.3, 30.8, 25.5, 21.1 | 1.21 | NO | PC failed; % VC difference > 15 |
| SLS-P57 | 40.4 | 0.140 | 17-Aug-04 | 0.523 | 6.59% | 4 | 4 | 0.9579 | 80.0, 66.1, 54.6, 45.2, 37.3, 30.8, 25.5, 21.1 | 1.21 | YES | |
| SLS-P58 | 47.1 | 0.163 | 24-Aug-04 | 0.477 | 4.19% | 2 | 5 | 0.9215 | 80.0, 66.1, 54.6, 45.2, 37.3, 30.8, 25.5, 21.1 | 1.21 | YES | |
| SLS-P59 | 40.6 | 0.141 | 24-Aug-04 | 0.462 | 7.30% | 4 | 4 | 0.9589 | 80.0, 66.1, 54.6, 45.2, 37.3, 30.8, 25.5, 21.1 | 1.21 | YES | |
| SLS-P60 | 53.7 | 0.186 | 31-Aug-04 | 0.754 | 3.56% | 2 | 6 | 0.8457 | 80.0, 66.1, 54.6, 45.2, 37.3, 30.8, 25.5, 21.1 | 1.21 | NO | IC50 out of range |
| SLS-P61 | 60.1 | 0.208 | 31-Aug-04 | 0.726 | 3.36% | 2 | 6 | 0.9203 | 80.0, 66.1, 54.6, 45.2, 37.3, 30.8, 25.5, 21.1 | 1.21 | NO | IC50 out of range |
| SLS-P62 | 43.4 | 0.150 | 14-Sep-04 | 0.635 | 5.64% | 2 | 5 | 0.9006 | 80.0, 66.1, 54.6, 45.2, 37.3, 30.8, 25.5, 21.1 | 1.21 | YES | |
| SLS-P63 | 41.4 | 0.144 | 14-Sep-04 | 0.625 | 6.52% | 2 | 5 | 0.9614 | 80.0, 66.1, 54.6, 45.2, 37.3, 30.8, 25.5, 21.1 | 1.21 | YES | |
| SLS-P64 | 37.4 | 0.130 | 28-Sep-04 | 0.473 | 6.10% | 3 | 4 | 0.9400 | 80.0, 66.1, 54.6, 45.2, 37.3, 30.8, 25.5, 21.1 | 1.21 | YES | |
| SLS-P65 | 38.8 | 0.135 | 28-Sep-04 | 0.394 | 4.91% | 3 | 4 | 0.9681 | 80.0, 66.1, 54.6, 45.2, 37.3, 30.8, 25.5, 21.1 | 1.21 | YES | |
| SLS-P66 | 37.0 | 0.128 | 5-Oct-04 | 0.520 | 3.86% | 2 | 4 | 0.9495 | 80.0, 66.1, 54.6, 45.2, 37.3, 30.8, 25.5, 21.1 | 1.21 | YES | |
| SLS-P67 | 33.4 | 0.116 | 5-Oct-04 | 0.554 | 4.23% | 3 | 3 | 0.9603 | 80.0, 66.1, 54.6, 45.2, 37.3, 30.8, 25.5, 21.1 | 1.21 | YES | |
| SLS-P68 | 42.7 | 0.148 | 19-Oct-04 | 0.472 | 0.62% | 2 | 5 | 0.9632 | 80.0, 66.1, 54.6, 45.2, 37.3, 30.8, 25.5, 21.1 | 1.21 | YES | |
| SLS-P69 | 43.6 | 0.151 | 19-Oct-04 | 0.349 | 0.38% | 1 | 5 | 0.9659 | 80.0, 66.1, 54.6, 45.2, 37.3, 30.8, 25.5, 21.1 | 1.21 | YES | |

## 3T3 NRU Positive Control (SLS) Data

| Experiment ID[1] 3T3 Cells | $IC_{50}$ (ug/mL) | $IC_{50}$ (mM) | Reference Substance Application Date | Mean VC OD[2] | Difference of right/left VC from mean VC[3] | Number of Points 0 - 50 %[4] | Number of Points 50 - 100 %[5] | $R^2$ [6] | Exposure Concentrations (ug/mL)[7] | Dilution Factor[8] | Acceptable Tests[9] | Rationale for Unacceptability |
|---|---|---|---|---|---|---|---|---|---|---|---|---|
| SLS-P70 | 39.7 | 0.138 | 26-Oct-04 | 0.468 | 3.33% | 3 | 4 | 0.9687 | 80.0, 66.1, 54.6, 45.2, 37.3, 30.8, 25.5, 21.1 | 1.21 | YES | |
| SLS-P71 | 44.9 | 0.156 | 27-Oct-04 | 0.504 | 3.38% | 2 | 3 | 0.9416 | 80.0, 66.1, 54.6, 45.2, 37.3, 30.8, 25.5, 21.1 | 1.21 | YES | |
| SLS-P72 | 45.8 | 0.159 | 2-Nov-04 | 0.517 | 1.76% | 3 | 5 | 0.9405 | 80.0, 66.1, 54.6, 45.2, 37.3, 30.8, 25.5, 21.1 | 1.21 | YES | |
| SLS-P73 | 45.7 | 0.158 | 2-Nov-04 | 0.517 | 0.08% | 2 | 5 | 0.9685 | 80.0, 66.1, 54.6, 45.2, 37.3, 30.8, 25.5, 21.1 | 1.21 | YES | |
| SLS-P74 | 46.6 | 0.161 | 16-Nov-04 | 0.510 | 0.42% | 2 | 5 | 0.9461 | 80.0, 66.1, 54.6, 45.2, 37.3, 30.8, 25.5, 21.1 | 1.21 | YES | |

# FAL

## Phase Ia

| | | | | | | | | | | | | |
|---|---|---|---|---|---|---|---|---|---|---|---|---|
| B1(1a/3T3/DF1/FAL/SLS) | 53.9 | 0.187 | 3-Sep-02 | 0.402 | 11.18% | 0 | 1 | 0.9577 | 400, 200, 100, 50, 25, 12.5, 6.3, 3.1 | 2.00 | NO | No point between 10 & 50% viability |
| B2(1a/3T3/DF2/FAL/SLS) | NA | NA | 3-Sep-02 | 0.419 | 15.17% | 1 | 1 | 0.7691 | 400, 200, 100, 50, 25, 12.5, 6.3, 3.1 | 2.00 | NO | Bad values for 6.3 ug/mL wells. VC difference > 15%. |
| B3(1a/3T3/DF3/FAL/SLS) | 50.8 | 0.176 | 3-Sep-02 | 0.420 | 3.73% | 0 | 1 | 0.9583 | 400, 200, 100, 50, 25, 12.5, 6.3, 3.1 | 2.00 | NO | No point between 10 & 50% viability |
| B4(1a/3T3/DF4/FAL/SLS) | 44.4 | 0.154 | 3-Sep-02 | 0.490 | 2.60% | 1 | 1 | 0.9800 | 400, 200, 100, 50, 25, 12.5, 6.3, 3.1 | 2.00 | NO | |
| B5(1a/3T3/DF5/FAL/SLS) | 51.0 | 0.177 | 3-Sep-02 | 0.503 | 8.01% | 0 | 1 | 0.9812 | 400, 200, 100, 50, 25, 12.5, 6.3, 3.1 | 2.00 | NO | No point between 10 & 50% viability |
| B6(1a/3T3/DF6/FAL/SLS) | 49.8 | 0.173 | 3-Sep-02 | 0.441 | 6.29% | 1 | 0 | 0.9517 | 400, 200, 100, 50, 25, 12.5, 6.3, 3.1 | 2.00 | NO | No point between 50 & 90% viability. |
| B7(1a/3T3/DF7/FAL/SLS) | 54.2 | 0.188 | 4-Sep-02 | 0.408 | 5.64% | 0 | 1 | 0.8134 | 400, 200, 100, 50, 25, 12.5, 6.3, 3.1 | 2.00 | NO | No point between 10 & 50% viability |
| B8(1a/3T3/DF8/FAL/SLS) | 50.2 | 0.174 | 4-Sep-02 | 0.337 | 34.90% | 0 | 1 | 0.8010 | 400, 200, 100, 50, 25, 12.5, 6.3, 3.1 | 2.00 | NO | VC difference > 15%. No point between 10 & 50% viability |
| B9(1a/3T3/DF9/FAL/SLS) | 52.1 | 0.181 | 4-Sep-02 | 0.484 | 0.79% | 0 | 1 | 0.9657 | 400, 200, 100, 50, 25, 12.5, 6.3, 3.1 | 2.00 | NO | No point between 10 & 50% viability |
| B10(1a/3T3/DF10/FAL/SLS) | 52.5 | 0.182 | 4-Sep-02 | 0.459 | 7.20% | 0 | 1 | 0.9389 | 400, 200, 100, 50, 25, 12.5, 6.3, 3.1 | 2.00 | NO | No point between 10 & 50% viability |
| B11(1a/3T3/DF11/FAL/SLS) | 46.4 | 0.161 | 4-Sep-02 | 0.509 | 6.94% | 0 | 3 | 0.9422 | 400, 200, 100, 50, 25, 12.5, 6.3, 3.1 | 2.00 | NO | No point between 10 & 50% viability |
| 1a/3T3/DF14/FAL/SLS | 23.0 | 0.080 | 18-Sep-02 | 0.900 | 3.51% | 1 | 3 | 0.8277 | 150, 102, 69.4, 47.2, 32.1, 21.9, 14.9, 10.1 | 1.47 | NO | Inadequate curve fit. |
| 1a/3T3/DF15/FAL/SLS | 46.7 | 0.162 | 18-Sep-02 | 0.547 | 7.61% | 1 | 0 | 0.9736 | 150, 102, 69.4, 47.2, 32.1, 21.9, 14.9, 10.1 | 1.47 | NO | No point between 50 & 90% viability |

## 3T3 NRU Positive Control (SLS) Data

| Experiment ID[1] 3T3 Cells | $IC_{50}$ (ug/mL) | $IC_{50}$ (mM) | Reference Substance Application Date | Mean VC OD[2] | Difference of right/left VC from mean VC[3] | Number of Points 0 - 50 %[4] | Number of Points 50 - 100 %[5] | $R^2$ [6] | Exposure Concentrations (ug/mL)[7] | Dilution Factor[8] | Acceptable Tests[9] | Rationale for Unacceptability |
|---|---|---|---|---|---|---|---|---|---|---|---|---|
| 1a/3T3/DF16/FAL/SLS | 42.4 | 0.147 | 18-Sep-02 | 0.590 | 21.70% | 1 | 0 | 0.9833 | 150, 102, 69.4, 47.2, 32.1, 21.9, 14.9, 10.1 | 1.47 | NO | VC difference > 15%. No point between 50 & 90% viability. |
| 1a/3T3/DF17/FAL/SLS | 46.6 | 0.161 | 18-Sep-02 | 0.442 | 4.00% | 1 | 0 | 0.8646 | 150, 102, 69.4, 47.2, 32.1, 21.9, 14.9, 10.1 | 1.47 | NO | No point between 50 & 90% viability |
| 1a/3T3/DF18/FAL/SLS | 22.6 | 0.078 | 18-Sep-02 | 0.920 | 4.36% | 2 | 3 | 0.8319 | 150, 102, 69.4, 47.2, 32.1, 21.9, 14.9, 10.1 | 1.47 | NO | Inadequate curve fit. |
| 1a/3T3/DF19/FAL/SLS | 23.1 | 0.080 | 18-Sep-02 | 0.936 | 4.30% | 1 | 3 | 0.8350 | 150, 102, 69.4, 47.2, 32.1, 21.9, 14.9, 10.1 | 1.47 | NO | Inadequate curve fit. |
| 1a/3T3/DF28/FAL/SLS | 48.0 | 0.166 | 22-Oct-02 | 0.488 | 9.05% | 0 | 1 | 0.9570 | 100, 68.0, 46.3, 31.5, 21.4, 14.6, 9.9, 6.7 | 1.47 | NO | No point between 10 & 50% viability |
| 1a/3T3/DF29/FAL/SLS | 50.7 | 0.176 | 22-Oct-02 | 0.579 | 10.46% | 0 | 3 | 0.8773 | 100, 68.0, 46.3, 31.5, 21.4, 14.6, 9.9, 6.7 | 1.47 | NO | No point between 10 & 50% viability |
| 1a/3T3/DF30/FAL/SLS | 42.0 | 0.146 | 23-Oct-02 | 0.768 | 6.31% | 1 | 3 | 0.9433 | 100, 68.0, 46.3, 31.5, 21.4, 14.6, 9.9, 6.7 | 1.47 | YES | |
| 1a/3T3/DF31/FAL/SLS | 46.8 | 0.162 | 23-Oct-02 | 0.795 | 2.60% | 0 | 4 | 0.9321 | 100, 68.0, 46.3, 31.5, 21.4, 14.6, 9.9, 6.7 | 1.47 | NO | No point between 10 & 50% viability |
| 1a/3T3/DF32/FAL/SLS | 49.0 | 0.170 | 23-Oct-02 | 0.784 | 0.24% | 0 | 1 | 0.9725 | 100, 68.0, 46.3, 31.5, 21.4, 14.6, 9.9, 6.7 | 1.47 | NO | No point between 10 & 50% viability |
| 1a3T3DF33FALSLS | 48.9 | 0.169 | 30-Oct-02 | 0.676 | 2.03% | 1 | 2 | 0.9532 | 100, 82.6, 68.3, 56.4, 46.7, 38.6, 31.9, 26.3 | 1.21 | YES | |
| 1a3T3DF34FALSLS | 48.0 | 0.166 | 30-Oct-02 | 0.636 | 4.77% | 1 | 2 | 0.9788 | 100, 82.6, 68.3, 56.4, 46.7, 38.6, 31.9, 26.3 | 1.21 | YES | |
| 1a3T3DF35FALSLS | 48.7 | 0.169 | 30-Oct-02 | 0.684 | 2.23% | 1 | 2 | 0.9811 | 100, 76.9, 59.2, 45.5, 35, 26.9, 20.7, 15.9 | 1.30 | YES | |
| 1a3T3DF36FALSLS | 53.0 | 0.184 | 30-Oct-02 | 0.545 | 4.83% | 1 | 1 | 0.8486 | 100, 76.9, 59.2, 45.5, 35, 26.9, 20.7, 15.9 | 1.30 | NO | Inadequate curve fit. |
| 1a3T3DF37FALSLS | 50.8 | 0.176 | 31-Oct-02 | 0.660 | 1.09% | 1 | 3 | 0.9261 | 100, 76.9, 59.2, 45.5, 35, 26.9, 20.7, 15.9 | 1.30 | YES | |
| 1a3T3DF38FALSLS+ | 51.4 | 0.178 | 31-Oct-02 | 0.612 | 9.54% | 1 | 4 | 0.9057 | 100, 76.9, 59.2, 45.5, 35, 26.9, 20.7, 15.9 | 1.30 | YES | |
| 1a3T3DF39FALSLS | 51.3 | 0.178 | 31-Oct-02 | 0.630 | 0.19% | 1 | 2 | 0.9749 | 100, 82.6, 68.3, 56.4, 46.7, 38.6, 31.9, 26.3 | 1.21 | YES | |
| 1a3T3DF40FALSLS | 52.5 | 0.182 | 31-Oct-02 | 0.669 | 6.97% | 1 | 1 | 0.9879 | 100, 82.6, 68.3, 56.4, 46.7, 38.6, 31.9, 26.3 | 1.21 | YES | |
| 1a3T3DF41FALSLS+ | 47.1 | 0.163 | 5-Nov-02 | 0.581 | 3.57% | 1 | 3 | 0.9757 | 100, 82.6, 68.3, 56.4, 46.7, 38.6, 31.9, 26.3 | 1.21 | YES | |
| 1a3T3DF42FALSLS | 46.8 | 0.162 | 5-Nov-02 | 0.564 | 11.34% | 1 | 3 | 0.9468 | 100, 82.6, 68.3, 56.4, 46.7, 38.6, 31.9, 26.3 | 1.21 | YES | |
| 1a3T3DF43FALSLS | 36.6 | 0.127 | 6-Nov-02 | 0.649 | 6.40% | 1 | 3 | 0.8929 | 100, 82.6, 68.3, 56.4, 46.7, 38.6, 31.9, 26.3 | 1.21 | YES | |
| 1a3T3DF44FALSLS+ | 44.8 | 0.155 | 6-Nov-02 | 0.605 | 1.06% | 2 | 3 | 0.9258 | 100, 82.6, 68.3, 56.4, 46.7, 38.6, 31.9, 26.3 | 1.21 | YES | |
| 1a3T3DF45FALSLS | 40.7 | 0.141 | 12-Nov-02 | 0.618 | 0.88% | 1 | 3 | 0.9756 | 100, 82.6, 68.3, 56.4, 46.7, 38.6, 31.9, 26.3 | 1.21 | YES | |
| 1a3T3DF46FALSLS | 42.3 | 0.147 | 12-Nov-02 | 0.665 | 0.86% | 1 | 3 | 0.9599 | 100, 82.6, 68.3, 56.4, 46.7, 38.6, 31.9, 26.3 | 1.21 | YES | |

## 3T3 NRU Positive Control (SLS) Data

| Experiment ID[1] 3T3 Cells | $IC_{50}$ (ug/mL) | $IC_{50}$ (mM) | Reference Substance Application Date | Mean VC OD[2] | Difference of right/left VC from mean VC[3] | Number of Points 0 - 50 %[4] | Number of Points 50 - 100 %[5] | $R^2$ [6] | Exposure Concentrations (ug/mL)[7] | Dilution Factor[8] | Acceptable Tests[9] | Rationale for Unacceptability |
|---|---|---|---|---|---|---|---|---|---|---|---|---|
| 1a3T3DF47FALSLS | 42.1 | 0.146 | 12-Nov-02 | 0.674 | 3.71% | 1 | 2 | 0.9811 | 100, 82.6, 68.3, 56.4, 46.7, 38.6, 31.9, 26.3 | 1.21 | YES | |
| 1a3T3DF48FALSLS | 37.9 | 0.131 | 13-Nov-02 | 0.531 | 15.94% | 2 | 3 | 0.8139 | 100, 82.6, 68.3, 56.4, 46.7, 38.6, 31.9, 26.3 | 1.21 | NO | VC difference > 15%. |
| 1a3T3DF49FALSLS | 38.7 | 0.134 | 13-Nov-02 | 0.561 | 14.96% | 1 | 3 | 0.8648 | 100, 82.6, 68.3, 56.4, 46.7, 38.6, 31.9, 26.3 | 1.21 | YES | |
| 1a3T3DF50FALSLS | 40.6 | 0.141 | 13-Nov-02 | 0.533 | 11.42% | 2 | 3 | 0.9179 | 100, 82.6, 68.3, 56.4, 46.7, 38.6, 31.9, 26.3 | 1.21 | YES | |
| 1a3T3DF51FALSLS | 40.3 | 0.140 | 20-Nov-02 | 0.689 | 0.29% | 1 | 3 | 0.9478 | 100, 82.6, 68.3, 56.4, 46.7, 38.6, 31.9, 26.3 | 1.21 | YES | |
| 1a3T3DF52FALSLS | 42.5 | 0.147 | 20-Nov-02 | 0.780 | 1.37% | 1 | 3 | 0.9682 | 100, 82.6, 68.3, 56.4, 46.7, 38.6, 31.9, 26.3 | 1.21 | YES | |
| 1a3T3DF53FALSLS | 39.9 | 0.138 | 20-Nov-02 | 0.692 | 7.30% | 2 | 3 | 0.9403 | 100, 82.6, 68.3, 56.4, 46.7, 38.6, 31.9, 26.3 | 1.21 | YES | |
| **Phase Ib** | | | | | | | | | | | | |
| 1b3T3CRT1FALSLS | 34.4 | 0.119 | 4-Dec-02 | 0.618 | 16.76% | 3 | 2 | 0.8479 | 100, 82.6, 68.3, 56.4, 46.7, 38.6, 31.9, 26.3 | 1.21 | NO | VC difference > 15% |
| 1b3T3CTR2FALSLS | 48.8 | 0.169 | 10-Dec-02 | 0.545 | 6.73% | 1 | 2 | 0.9409 | 100, 82.6, 68.3, 56.4, 46.7, 38.6, 31.9, 26.3 | 1.21 | YES | |
| 1b3T3CTRFALSLS | 24.5 | 0.085 | 17-Dec-02 | 0.453 | 1.97% | 1 | 0 | 0.8653 | 100, 82.6, 68.3, 56.4, 46.7, 38.6, 31.9, 26.3 | 1.21 | NO | IC50 out of range; no points between 50 & 90% viability |
| 1b3T3CTRFALSLS | 43.5 | 0.151 | 7-Jan-03 | 0.597 | 2.23% | 1 | 2 | 0.9631 | 100, 82.6, 68.3, 56.4, 46.7, 38.6, 31.9, 26.3 | 1.21 | YES | |
| 1b3T3CTRFALSLS | 50.9 | 0.176 | 8-Jan-03 | 0.271 | 14.37% | 1 | 1 | 0.9136 | 100, 82.6, 68.3, 56.4, 46.7, 38.6, 31.9, 26.3 | 1.21 | YES | NR crystals in plate; stopped after 1 h |
| 1b3T3CRTFALSLS | 43.2 | 0.150 | 14-Jan-03 | 0.625 | 3.68% | 1 | 3 | 0.9163 | 100, 82.6, 68.3, 56.4, 46.7, 38.6, 31.9, 26.3 | 1.21 | YES | |
| 1b3T3CRT2FALSLS | 32.4 | 0.112 | 14-Jan-03 | 0.417 | 5.55% | 1 | 2 | 0.9377 | 100, 82.6, 68.3, 56.4, 46.7, 38.6, 31.9, 26.3 | 1.21 | YES | |
| 1b3T3CRTFALSLS | 70.1 | 0.243 | 15-Jan-03 | 0.432 | 2.31% | 1 | 2 | 0.9000 | 82.6, 67.7, 56.0, 42.29, 38.25, 31.61, 26.13,21.59 | 1.21 | YES | IC50 out of range |
| 1b3T3CRTFALSLS | 35.3 | 0.122 | 21-Jan-03 | 0.651 | 1.86% | 1 | 2 | 0.9727 | 100.00, 82.64, 68.30, 56.45, 46.65, 38.55, 31.86, 26.33 | 1.21 | YES | |
| 1b3T3CRTFALSLS | 38.1 | 0.132 | 28-Jan-03 | 0.181 | 17.95% | 1 | 0 | 0.9716 | 100, 82.6, 68.3, 56.4, 46.7, 38.6, 31.9, 26.3 | 1.21 | NO | NR crystals in plate; stopped after 1 h; VC difference > 15%; no point between 50 & 90% viability |
| 1b3T3CRTFALSLS | 58.7 | 0.204 | 29-Jan-03 | 0.646 | 8.07% | 0 | 2 | 0.9573 | 100, 68.02, 46.28, 31.48, 21.42, 14.57, 9.91, 6.74 | | NO | No point between 10 & 50% viability |
| 1b3T3CRTFALSLS | 44.3 | 0.154 | 4-Feb-03 | 0.662 | 0.79% | 1 | 1 | 0.9848 | 100, 82.6, 68.3, 56.4, 46.7, 38.6, 31.9, 26.3 | 1.21 | YES | |

## 3T3 NRU Positive Control (SLS) Data

| Experiment ID[1] 3T3 Cells | $IC_{50}$ (ug/mL) | $IC_{50}$ (mM) | Reference Substance Application Date | Mean VC OD[2] | Difference of right/left VC from mean VC[3] | Number of Points 0 - 50 %[4] | Number of Points 50 - 100 %[5] | $R^2$ [6] | Exposure Concentrations (ug/mL)[7] | Dilution Factor[8] | Acceptable Tests[9] | Rationale for Unacceptability |
|---|---|---|---|---|---|---|---|---|---|---|---|---|
| 1b3T3CRTFALSLS | 36.8 | 0.128 | 5-Feb-03 | 0.566 | 1.65% | 1 | 1 | 0.9867 | 100, 82.645, 68.301, 56.447, 46.651, 38.554, 31.863, 26.333 | 1.21 | YES | |
| 1b3T3CRTFALSLS | 48.0 | 0.166 | 26-Feb-03 | 0.310 | 15.17% | 1 | 2 | 0.9457 | 100, 82.6, 68.3, 56.4, 46.7, 38.6, 31.9, 26.3 | 1.21 | YES | |
| **Phase II** | | | | | | | | | | | | |
| A1SLS190603 | 49.1 | 0.170 | 17-Jun-03 | 1.031 | 2.49% | 2 | 5 | 0.7802 | 100, 82.6, 68.5, 56.5, 46.7, 38.6, 31.9, 26.4 | 1.21 | NO | r2 too low |
| FAL.3T3.SLS2.A1.200603 | 54.6 | 0.189 | 18-Jun-03 | 0.684 | 6.26% | 4 | 3 | 0.9851 | 100, 82.6, 68.5, 56.5, 46.7, 38.6, 31.9, 26.4 | 1.21 | YES | |
| FAL.3T3.SLS.A2.26.06.03 | 50.8 | 0.176 | 24-Jun-03 | 0.483 | 3.45% | 3 | 4 | 0.9788 | 100, 82.6, 68.5, 56.5, 46.7, 38.6, 31.9, 26.4 | 1.21 | YES | |
| FAL.3T3.SLS.A2.27.06.03 | 50.7 | 0.176 | 25-Jun-03 | 0.564 | 0.19% | 2 | 2 | 0.9878 | 100, 82.6, 68.5, 56.5, 46.7, 38.6, 31.9, 26.4 | 1.21 | YES | |
| FAL.3T3.SLS.B1.03.07.03 | 57.5 | 0.199 | 1-Jul-03 | 0.516 | 7.13% | 1 | 4 | 0.9913 | 100, 82.6, 68.5, 56.5, 46.7, 38.6, 31.9, 26.4 | 1.21 | YES | IC50 out of range |
| FAL.3T3.SLS.04.07.03 | 55.8 | 0.193 | 2-Jul-03 | 0.562 | 4.86% | 4 | 3 | 0.9788 | 100, 82.6, 68.5, 56.5, 46.7, 38.6, 31.9, 26.4 | 1.21 | NO | IC50 out of range |
| FAL.3T3.SLS.10.07.03 | 52.5 | 0.182 | 8-Jul-03 | 0.640 | 0.86% | 2 | 3 | 0.9794 | 100, 82.6, 68.5, 56.5, 46.7, 38.6, 31.9, 26.4 | 1.21 | YES | |
| FAL.3T3.SLS.11.07.03 | 50.6 | 0.175 | 9-Jul-03 | 0.533 | 2.92% | 2 | 3 | 0.9869 | 100, 82.6, 68.5, 56.5, 46.7, 38.6, 31.9, 26.4 | 1.21 | YES | |
| FAL.3T3.SLS.17.07.03 | 50.2 | 0.174 | 15-Jul-03 | 0.708 | 0.81% | 2 | 3 | 0.9905 | 100, 82.6, 68.5, 56.5, 46.7, 38.6, 31.9, 26.4 | 1.21 | YES | |
| FAL.3T3.SLS.18.07.03 | 43.2 | 0.150 | 16-Jul-03 | 0.502 | 5.68% | 2 | 3 | 0.9763 | 100, 82.6, 68.5, 56.5, 46.7, 38.6, 31.9, 26.4 | 1.21 | YES | |
| FAL.3T3.SLS.25.07.03 | 47.6 | 0.165 | 23-Jul-03 | 0.435 | 5.81% | 1 | 2 | 0.9633 | 100, 82.6, 68.5, 56.5, 46.7, 38.6, 31.9, 26.4 | 1.21 | YES | |
| FAL.3T3.SLS.070803 | 30.5 | 0.106 | 5-Aug-03 | 0.725 | 0.11% | 7 | 1 | 0.9204 | 100, 82.6, 68.5, 56.5, 46.7, 38.6, 31.9, 26.4 | 1.21 | NO | IC50 out of range |
| FAL.3T3.SLS.080803 | 36.2 | 0.126 | 6-Aug-03 | 0.463 | 1.17% | 5 | 3 | 0.7811 | 100, 82.6, 68.5, 56.5, 46.7, 38.6, 31.9, 26.4 | 1.21 | NO | low r2 |
| FAL.3T3.SLS.120903 | 39.4 | 0.137 | 10-Sep-03 | 0.768 | 4.53% | 3 | 4 | 0.8322 | 100, 82.6, 68.5, 56.5, 46.7, 38.6, 31.9, 26.4 | 1.21 | YES | |
| FAL.3T3.SLS.180903 | 45.2 | 0.157 | 16-Sep-03 | 0.401 | 0.69% | 4 | 3 | 0.9582 | 100, 82.6, 68.5, 56.5, 46.7, 38.6, 31.9, 26.4 | 1.21 | YES | |
| FAL.3T3.SLS.190903 | 45.0 | 0.156 | 17-Sep-03 | 0.377 | 0.62% | 1 | 2 | 0.9790 | 100, 82.6, 68.5, 56.5, 46.7, 38.6, 31.9, 26.4 | 1.21 | YES | |
| FAL.3T3.SLS.250903 | 35.7 | 0.124 | 23-Sep-03 | 0.379 | 4.55% | 3 | 2 | 0.9738 | 100, 82.6, 68.5, 56.5, 46.7, 38.6, 31.9, 26.4 | 1.21 | YES | |
| FAL.3T3.SLS.031003 | 51.2 | 0.178 | 1-Oct-03 | 0.596 | 5.23% | 2 | 4 | 0.9344 | 100, 82.6, 68.5, 56.5, 46.7, 38.6, 31.9, 26.4 | 1.21 | YES | |
| FAL.3T3.SLS.171003 | 37.5 | 0.130 | 15-Oct-03 | 0.398 | 9.90% | 3 | 2 | 0.9763 | 100, 82.6, 68.5, 56.5, 46.7, 38.6, 31.9, 26.4 | 1.21 | YES | |
| FAL.3T3.SLS.301003 | 49.8 | 0.173 | 28-Oct-03 | 0.310 | 12.63% | 4 | 1 | 0.9702 | 100, 82.6, 68.5, 56.5, 46.7, 38.6, 31.9, 26.4 | 1.21 | YES | |

## 3T3 NRU Positive Control (SLS) Data

| Experiment ID[1] 3T3 Cells | $IC_{50}$ (ug/mL) | $IC_{50}$ (mM) | Reference Substance Application Date | Mean VC OD[2] | Difference of right/left VC from mean VC[3] | Number of Points 0 - 50 %[4] | Number of Points 50 - 100 %[5] | $R^2$ [6] | Exposure Concentrations (ug/mL)[7] | Dilution Factor[8] | Acceptable Tests[9] | Rationale for Unacceptability |
|---|---|---|---|---|---|---|---|---|---|---|---|---|
| FAL.3T3.SLS.301003 (should be 311003) | 39.6 | 0.137 | 29-Oct-03 | 0.313 | 8.62% | 3 | 3 | 0.9886 | 100, 82.6, 68.5, 56.5, 46.7, 38.6, 31.9, 26.4 | 1.21 | YES | |
| **Phase III** | | | | | | | | | | | | |
| FAL.3T3.SLS.080104 | 55.0 | 0.191 | 6-Jan-04 | 0.615 | 0.20% | 4 | 4 | 0.9771 | 100, 82.6, 68.5, 56.5, 46.7, 38.6, 31.9, 26.4 | 1.21 | YES | |
| FAL.3T3.SLS.09/01/04 | 53.3 | 0.185 | 7-Jan-04 | 0.592 | 7.04% | 4 | 4 | 0.9727 | 100, 82.6, 68.5, 56.5, 46.7, 38.6, 31.9, 26.4 | 1.21 | YES | |
| FAL.3T3.SLS.15/01/04 | 67.0 | 0.232 | 13-Jan-04 | 0.841 | 1.98% | 2 | 6 | 0.8901 | 100, 82.6, 68.5, 56.5, 46.7, 38.6, 31.9, 26.4 | 1.21 | NO | IC50 out of range |
| FAL.3T3.SLS.16/01/04 | 30.4 | 0.105 | 14-Jan-04 | 1.161 | 0.39% | 6 | 2 | 0.8932 | 100, 82.6, 68.5, 56.5, 46.7, 38.6, 31.9, 26.4 | 1.21 | YES | |
| FAL.3T3.SLS.22/01/04 | 35.7 | 0.124 | 20-Jan-04 | 0.382 | 7.11% | 3 | 2 | 0.9685 | 100, 82.6, 68.5, 56.5, 46.7, 38.6, 31.9, 26.4 | 1.21 | YES | |
| FAL3T3.23-01-04 | 30.8 | 0.107 | 21-Jan-04 | 0.792 | 2.31% | 2 | 2 | 0.9194 | 100, 82.6, 68.5, 56.5, 46.7, 38.6, 31.9, 26.4 | 1.21 | YES | |
| FAL3T3.SLS.29-01-04 | 41.4 | 0.144 | 27-Jan-04 | 0.467 | 0.43% | 5 | 3 | 0.9671 | 100, 82.6, 68.5, 56.5, 46.7, 38.6, 31.9, 26.4 | 1.21 | YES | |
| FAL.3T3.SLS.29/01/04 | 44.3 | 0.153 | 28-Jan-04 | 0.453 | 1.44% | 4 | 4 | 0.9721 | 100, 82.6, 68.5, 56.5, 46.7, 38.6, 31.9, 26.4 | 1.21 | YES | |
| FAL.3T3.SLS.5/02/04 | 26.9 | 0.093 | 3-Feb-04 | 0.417 | 2.14% | 4 | 0 | 0.9317 | 100, 82.6, 68.5, 56.5, 46.7, 38.6, 31.9, 26.4 | 1.21 | NO | recalculated values: IC50 out of range; no points between 50-100 |
| FAL.3T3.SLS.06/02/04 | 38.8 | 0.135 | 4-Feb-04 | 0.427 | 4.23% | 5 | 3 | 0.9136 | 100, 82.6, 68.3, 56.4, 46.7, 38.6, 31.9, 26.3 | 1.21 | YES | |
| FAL3T3.SLS.25.02.04 | 47.9 | 0.166 | 23-Feb-04 | 0.637 | 2.29% | 3 | 4 | 0.9829 | 100, 82.6, 68.3, 56.4, 46.7, 38.6, 31.9, 26.3 | 1.21 | YES | |
| FAL.3T3.SLS.17/03/04 | 49.8 | 0.173 | 15-Mar-04 | 0.356 | 5.91% | 4 | 3 | 0.9831 | 100, 82.6, 68.3, 56.4, 46.7, 38.6, 31.9, 26.3 | 1.21 | YES | |
| FAL.3T3.SLS.01/04/04 | 44.0 | 0.152 | 30-Mar-04 | 0.404 | 1.46% | 2 | 2 | 0.9593 | 100, 82.6, 68.3, 56.4, 46.7, 38.6, 31.9, 26.3 | 1.21 | YES | |
| FAL.3T3.SLS.29/04/04 | 42.3 | 0.147 | 27-Apr-04 | 0.310 | 2.34% | 3 | 5 | 0.9881 | 100, 82.6, 68.3, 56.4, 46.7, 38.6, 31.9, 26.3 | 1.21 | YES | |
| FAL.3T3.SLS.30/04/04 | 31.3 | 0.108 | 28-Apr-04 | 0.249 | 4.22% | 6 | 1 | 0.9874 | 100, 82.6, 68.3, 56.4, 46.7, 38.6, 31.9, 26.3 | 1.21 | YES | |
| FAL.3T3.SLS.06/05/04 | 40.7 | 0.141 | 4-May-04 | 0.320 | 9.70% | 2 | 3 | 0.9897 | 100, 82.6, 68.3, 56.4, 46.7, 38.6, 31.9, 26.3 | 1.21 | YES | |
| FAL.3T3.SLS.07/05/04 | 40.2 | 0.139 | 5-May-04 | 0.313 | 0.03% | 3 | 3 | 0.9865 | 100, 82.6, 68.3, 56.4, 46.7, 38.6, 31.9, 26.3 | 1.21 | YES | |
| FAL.3T3.SLS.20/05/04 | 45.2 | 0.157 | 18-May-04 | 0.422 | 3.24% | 2 | 3 | 0.9797 | 100, 82.6, 68.3, 56.4, 46.7, 38.6, 31.9, 26.3 | 1.21 | YES | |
| FAL.3T3.SLS.21.05.04 | 32.7 | 0.114 | 19-May-04 | 0.337 | 0.94% | 2 | 2 | 0.9720 | 100, 82.6, 68.3, 56.4, 46.7, 38.6, 31.9, 26.3 | 1.21 | YES | |
| FAL.3T3.SLS.27/05/04 | 44.2 | 0.153 | 25-May-04 | 0.406 | 5.89% | 3 | 3 | 0.9466 | 100, 82.6, 68.3, 56.4, 46.7, 38.6, 31.9, 26.3 | 1.21 | YES | |
| FAL.3T3.SLS.24.06.04 | 40.6 | 0.141 | 22-Jun-04 | 0.434 | 3.69% | 4 | 3 | 0.9826 | 100, 82.6, 68.3, 56.4, 46.7, 38.6, 31.9, 26.3 | 1.21 | YES | |

## 3T3 NRU Positive Control (SLS) Data

| Experiment ID[1] 3T3 Cells | $IC_{50}$ (ug/mL) | $IC_{50}$ (mM) | Reference Substance Application Date | Mean VC OD[2] | Difference of right/left VC from mean VC[3] | Number of Points 0 - 50 %[4] | Number of Points 50 - 100 %[5] | $R^2$ [6] | Exposure Concentrations (ug/mL)[7] | Dilution Factor[8] | Acceptable Tests[9] | Rationale for Unacceptability |
|---|---|---|---|---|---|---|---|---|---|---|---|---|
| FAL.3T3.SLS.08.07.04 | 39.7 | 0.138 | 6-Jul-04 | 0.324 | 7.16% | 2 | 3 | 0.9659 | 100, 82.6, 68.3, 56.4, 46.7, 38.6, 31.9, 26.3 | 1.21 | YES | |
| FAL.3T3.SLS.09.07.04 | 40.3 | 0.140 | 7-Jul-04 | 0.408 | 2.92% | 2 | 3 | 0.9765 | 100, 82.6, 68.3, 56.4, 46.7, 38.6, 31.9, 26.3 | 1.21 | YES | |
| FAL.3T3.SLS.16.07.04 | 35.6 | 0.124 | 14-Jul-04 | 0.402 | 5.43% | 2 | 2 | 0.9676 | 100, 82.6, 68.3, 56.4, 46.7, 38.6, 31.9, 26.3 | 1.21 | YES | |
| FAL.3T3.SLS.17.09.04 | 40.3 | 0.140 | 15-Sep-04 | 0.411 | 1.89% | 3 | 3 | 0.9796 | 100, 82.6, 68.3, 56.4, 46.7, 38.6, 31.9, 26.3 | 1.21 | YES | |
| FAL.3T3.SLS.23.09.04 | 40.7 | 0.14126 | 21-Sep-04 | 0.333 | 2.60% | 2 | 3 | 0.9718 | 100, 82.6, 68.3, 56.4, 46.7, 38.6, 31.9, 26.3 | 1.21 | YES | |
| FAL.3T3.SLS.14.10.04 | 42.9 | 0.14860 | 12-Oct-04 | 0.320 | 5.42% | 3 | 2 | 0.9901 | 100, 82.6, 68.3, 56.4, 46.7, 38.6, 31.9, 26.3 | 1.21 | YES | |
| FAL.3T3.SLS.04.11.04 | 39.9 | 0.13836 | 2-Nov-04 | 0.259 | 2.51% | 4 | 3 | 0.9816 | 100, 82.6, 68.3, 56.4, 46.7, 38.6, 31.9, 26.3 | 1.21 | YES | |

# IIVS

## Phase Ia

| | | | | | | | | | | | | |
|---|---|---|---|---|---|---|---|---|---|---|---|---|
| B1 | NA | NA | 24-Aug-02 | 0.306 | 17.18% | 1 | 0 | 0.5129 | 100, 56.2, 31.6, 17.8, 10, 5.63, 3.17, 1.78 | 1.78 | NO | VC difference > 15%. No points between 50 & 90% viability. |
| B2 | 53.7 | 0.186 | 24-Aug-02 | 0.280 | 38.89% | 1 | 0 | 0.3966 | 100, 56.2, 31.6, 17.8, 10, 5.63, 3.17, 1.78 | 1.78 | NO | VC difference > 15%. No points between 50 & 90% viability. |
| B3 | 34.7 | 0.120 | 25-Aug-02 | 0.452 | 1.92% | 0 | 1 | 0.9877 | 100, 56.2, 31.6, 17.8, 10, 5.63, 3.17, 1.78 | 1.78 | NO | No points between 10 & 50% viability. |
| B4 | 34.2 | 0.119 | 25-Aug-02 | 0.428 | 4.07% | 0 | 3 | 0.9664 | 100, 56.2, 31.6, 17.8, 10, 5.63, 3.17, 1.78 | 1.78 | NO | No points between 10 & 50% viability. |
| B5 | 35.9 | 0.125 | 26-Aug-02 | 0.409 | 3.71% | 0 | 1 | 0.9872 | 100, 56.2, 31.6, 17.8, 10, 5.63, 3.17, 1.78 | 1.78 | NO | No points between 10 & 50% viability. |
| B6 | 39.0 | 0.135 | 26-Aug-02 | 0.382 | 0.09% | 0 | 0 | 0.9649 | 100, 56.2, 31.6, 17.8, 10, 5.63, 3.17, 1.78 | 1.78 | NO | No points between 10 & 90% viability. |
| B7 | 35.7 | 0.124 | 27-Aug-02 | 0.302 | 2.98% | 0 | 2 | 0.9773 | 100, 56.2, 31.6, 17.8, 10, 5.63, 3.17, 1.78 | 1.78 | NO | No points between 10 & 50% viability. |
| B8 | 36.1 | 0.125 | 27-Aug-02 | 0.299 | 6.86% | 0 | 1 | 0.9792 | 100, 56.2, 31.6, 17.8, 10, 5.63, 3.17, 1.78 | 1.78 | NO | No points between 10 & 50% viability. |
| B9 | 41.5 | 0.144 | 29-Aug-02 | 0.342 | 6.02% | 1 | 1 | 0.9831 | 100, 68.1, 46.4, 31.6, 21.5, 14.7, 10, 6.8 | 1.47 | YES | |
| B10 | 45.1 | 0.156 | 29-Aug-02 | 0.358 | 1.51% | 1 | 1 | 0.9664 | 100, 68.1, 46.4, 31.6, 21.5, 14.7, 10, 6.8 | 1.47 | YES | |
| B11 | 43.8 | 0.152 | 30-Aug-02 | 0.366 | 4.26% | 1 | 0 | 0.9936 | 100, 68.1, 46.4, 31.6, 21.5, 14.7, 10, 6.8 | 1.47 | NO | No points between 50 & 90% viability. |
| B12 | 44.6 | 0.155 | 30-Aug-02 | 0.359 | 0.95% | 1 | 1 | 0.9864 | 100, 68.1, 46.4, 31.6, 21.5, 14.7, 10, 6.8 | 1.47 | YES | |
| B13 | 44.5 | 0.154 | 4-Sep-02 | 0.538 | 0.37% | 1 | 1 | 0.9799 | 100, 68.1, 46.4, 31.6, 21.5, 14.7, 10, 6.8 | 1.47 | YES | |

## 3T3 NRU Positive Control (SLS) Data

| Experiment ID[1] 3T3 Cells | $IC_{50}$ (ug/mL) | $IC_{50}$ (mM) | Reference Substance Application Date | Mean VC OD[2] | Difference of right/left VC from mean VC[3] | Number of Points 0 - 50 %[4] | Number of Points 50 - 100 %[5] | $R^2$ [6] | Exposure Concentrations (ug/mL)[7] | Dilution Factor[8] | Acceptable Tests[9] | Rationale for Unacceptability |
|---|---|---|---|---|---|---|---|---|---|---|---|---|
| B14 | 43.9 | 0.152 | 4-Sep-02 | 0.491 | 6.43% | 1 | 1 | 0.9869 | 100, 68.1, 46.4, 31.6, 21.5, 14.7, 10, 6.8 | 1.47 | YES | |
| B15 | 37.8 | 0.131 | 5-Sep-02 | 0.357 | 9.90% | 1 | 1 | 0.9906 | 100, 68.1, 46.4, 31.6, 21.5, 14.7, 10, 6.8 | 1.47 | YES | |
| B16 | 40.4 | 0.140 | 5-Sep-02 | 0.336 | 10.55% | 1 | 1 | 0.9832 | 100, 68.1, 46.4, 31.6, 21.5, 14.7, 10, 6.8 | 1.47 | YES | |
| B17 | 39.7 | 0.138 | 6-Sep-02 | 0.464 | 2.31% | 1 | 2 | 0.9780 | 100, 68.1, 46.4, 31.6, 21.5, 14.7, 10, 6.8 | 1.47 | YES | |
| B18 | 38.1 | 0.132 | 6-Sep-02 | 0.426 | 11.25% | 1 | 1 | 0.9910 | 100, 68.1, 46.4, 31.6, 21.5, 14.7, 10, 6.8 | 1.47 | YES | |
| B19 | 36.7 | 0.127 | 7-Sep-02 | 0.378 | 4.90% | 1 | 1 | 0.9928 | 100, 68.1, 46.4, 31.6, 21.5, 14.7, 10, 6.8 | 1.47 | YES | |
| B20 | 36.5 | 0.127 | 7-Sep-02 | 0.354 | 12.49% | 1 | 1 | 0.9954 | 100, 68.1, 46.4, 31.6, 21.5, 14.7, 10, 6.8 | 1.47 | YES | |
| B21 | 46.7 | 0.162 | 8-Sep-02 | 0.453 | 0.44% | 0 | 2 | 0.9800 | 100, 68.1, 46.4, 31.6, 21.5, 14.7, 10, 6.8 | 1.47 | NO | No points between 10 & 50% viability. |
| B22 | 41.8 | 0.145 | 8-Sep-02 | 0.439 | 0.63% | 1 | 1 | 0.9802 | 100, 68.1, 46.4, 31.6, 21.5, 14.7, 10, 6.8 | 1.47 | YES | |
| **Phase Ib** | | | | | | | | | | | | |
| A1 Preliminary | 41.1 | 0.143 | 15-Jan-03 | 0.389 | 8.42% | 1 | 1 | 0.9890 | 100, 68.1, 46.4, 31.6, 21.5, 14.7, 10.0, 6.81 | 1.47 | YES | |
| B1 | 43.5 | 0.151 | 22-Jan-03 | 0.569 | 6.41% | 1 | 1 | 0.9822 | 100, 68.1, 46.4, 31.6, 21.5, 14.7, 10.0, 6.81 | 1.47 | YES | |
| B2 | 44.8 | 0.155 | 29-Jan-03 | 0.514 | 2.88% | 1 | 1 | 0.9830 | 100, 68.1, 46.4, 31.6, 21.5, 14.7, 10.0, 6.81 | 1.47 | YES | |
| B3 | 38.5 | 0.133 | 5-Feb-03 | 0.519 | 1.00% | 1 | 1 | 0.9854 | 100, 68.1, 46.4, 31.6, 21.5, 14.7, 10.0, 6.81 | 1.47 | YES | |
| B4 | 49.4 | 0.171 | 12-Feb-03 | 0.548 | 10.23% | 0 | 2 | 0.9770 | 100, 68.1, 46.4, 31.6, 21.5, 14.7, 10.0, 6.81 | 1.47 | NO | No points between 10 and 50%; IC50 out of range |
| B5 | 41.9 | 0.145 | 26-Feb-03 | 0.507 | 5.41% | 1 | 1 | 0.9747 | 100, 68.1, 46.4, 31.6, 21.5, 14.7, 10.0, 6.81 | 1.47 | YES | |
| **Phase II** | | | | | | | | | | | | |
| A1 | 41.3 | 0.143 | 23-Jul-03 | 0.546 | 3.97% | 1 | 3 | 0.9902 | 100, 66.7, 44.4, 29.6, 19.8, 13.2, 8.78, 5.85 | 1.50 | YES | |
| B1 | 39.6 | 0.137 | 28-Jul-03 | 0.375 | 1.11% | 1 | 5 | 0.9559 | 100, 71.4, 51.0, 36.4, 26.0, 18.6, 13.3, 9.5 | 1.40 | YES | |
| B2 | 38.8 | 0.135 | 29-Jul-03 | 0.529 | 5.36% | 2 | 5 | 0.9711 | 100, 71.4, 51.0, 36.4, 26.0, 18.6, 13.3, 9.5 | 1.40 | YES | |
| B3 | 30.0 | 0.104 | 30-Jul-03 | 0.527 | 1.74% | 1 | 4 | 0.9854 | 100, 71.4, 51.0, 36.4, 26.0, 18.6, 13.3, 9.5 | 1.40 | NO | IC50 out of range |
| B4 | 42.6 | 0.148 | 13-Aug-03 | 0.483 | 7.35% | 1 | 5 | 0.9891 | 100, 71.4, 51.0, 36.4, 26.0, 18.6, 13.3, 9.5 | 1.40 | YES | |
| B5 | 39.1 | 0.136 | 16-Sep-03 | 0.510 | 6.44% | 3 | 5 | 0.9568 | 100, 71.4, 51.0, 36.4, 26.0, 18.6, 13.3, 9.5 | 1.40 | YES | |
| B6 | 38.2 | 0.132 | 23-Sep-03 | 0.433 | 2.75% | 1 | 5 | 0.9668 | 100, 71.4, 51.0, 36.4, 26.0, 18.6, 13.3, 9.5 | 1.40 | YES | |

## 3T3 NRU Positive Control (SLS) Data

| Experiment ID[1] 3T3 Cells | $IC_{50}$ (ug/mL) | $IC_{50}$ (mM) | Reference Substance Application Date | Mean VC OD[2] | Difference of right/left VC from mean VC[3] | Number of Points 0 - 50 %[4] | Number of Points 50 - 100 %[5] | $R^2$ [6] | Exposure Concentrations (ug/mL)[7] | Dilution Factor[8] | Acceptable Tests[9] | Rationale for Unacceptability |
|---|---|---|---|---|---|---|---|---|---|---|---|---|
| B7 | 38.9 | 0.135 | 24-Sep-03 | 0.479 | 2.49% | 1 | 5 | 0.9710 | 100, 71.4, 51.0, 36.4, 26.0, 18.6, 13.3, 9.5 | 1.40 | YES | |
| B8 | 45.2 | 0.157 | 1-Oct-03 | 0.547 | 3.52% | 1 | 5 | 0.9798 | 100, 71.4, 51.0, 36.4, 26.0, 18.6, 13.3, 9.5 | 1.40 | YES | |
| **Phase III** | | | | | | | | | | | | |
| A1 | 42.1 | 0.146 | 3-Feb-04 | 0.429 | 3.86% | 2 | 5 | 0.9691 | 100, 71.4, 51.0, 36.4, 26.0, 18.6, 13.3, 9.49, | 1.40 | YES | |
| A2 | 42.4 | 0.147 | 10-Feb-04 | 0.494 | 0.10% | 2 | 4 | 0.9874 | 100, 71.4, 51.0, 36.4, 26.0, 18.6, 13.3, 9.49, | 1.40 | YES | |
| A3 | 41.0 | 0.142 | 17-Feb-04 | 0.458 | 1.06% | 1 | 4 | 0.9858 | 100, 71.4, 51.0, 36.4, 26.0, 18.6, 13.3, 9.49 | 1.40 | YES | |
| A4 | 37.2 | 0.129 | 9-Mar-04 | 0.417 | 7.26% | 1 | 4 | 0.9893 | 100, 71.4, 51.0, 36.4, 26.0, 18.6, 13.3, 9.49 | 1.40 | YES | |
| A5 | 33.0 | 0.114 | 23-Mar-04 | 0.346 | 1.01% | 2 | 3 | 0.9758 | 100, 71.4, 51.0, 36.4, 26.0, 18.6, 13.3, 9.49 | 1.40 | YES | |
| B1 | 45.9 | 0.159 | 26-Jul-04 | 0.399 | 0.81% | 1 | 5 | 0.9709 | 100, 71.4, 51.0, 36.4, 26.0, 18.6, 13.3, 9.49, | 1.40 | YES | |
| B2 | 44.5 | 0.154 | 27-Jul-04 | 0.379 | 5.70% | 3 | 4 | 0.9828 | 100, 71.4, 51.0, 36.4, 26.0, 18.6, 13.3, 9.49, | 1.40 | YES | |
| B3 | 40.1 | 0.139 | 28-Jul-04 | 0.344 | 14.50% | 2 | 5 | 0.9364 | 100, 71.4, 51.0, 36.4, 26.0, 18.6, 13.3, 9.49, | 1.40 | YES | |
| B4 | 42.2 | 0.146 | 23-Aug-04 | 0.493 | 3.37% | 1 | 3 | 0.9874 | 100, 71.4, 51.0, 36.4, 26.0, 18.6, 13.3, 9.49, | 1.40 | YES | |
| B5 | 47.2 | 0.164 | 24-Aug-04 | 0.485 | 7.64% | 2 | 2 | 0.9864 | 100, 71.4, 51.0, 36.4, 26.0, 18.6, 13.3, 9.49 | 1.40 | YES | |
| B6 | 46.1 | 0.160 | 28-Sep-04 | 0.462 | 1.12% | 1 | 4 | 0.9824 | 100, 71.4, 51.0, 36.4, 26.0, 18.6, 13.3, 9.49 | 1.40 | YES | |
| B7 | 40.7 | 0.141 | 1-Oct-04 | 0.372 | 10.21% | 1 | 5 | 0.9808 | 100, 71.4, 51.0, 36.4, 26.0, 18.6, 13.3, 9.49 | 1.40 | YES | |
| B8 | 41.2 | 0.143 | 4-Oct-04 | 0.427 | 0.90% | 1 | 4 | 0.9826 | 100, 71.4, 51.0, 36.4, 26.0, 18.6, 13.3, 9.49 | 1.40 | YES | |
| B9 | 43.4 | 0.150 | 12-Oct-04 | 0.413 | 4.72% | 1 | 5 | 0.9758 | 100, 71.4, 51.0, 36.4, 26.0, 18.6, 13.3, 9.49 | 1.40 | YES | |
| B10 | 43.7 | 0.151 | 13-Oct-04 | 0.465 | 2.54% | 2 | 5 | 0.9833 | 100, 71.4, 51.0, 36.4, 26.0, 18.6, 13.3, 9.49, | 1.40 | YES | |
| B11 | 42.3 | 0.147 | 2-Nov-04 | 0.398 | 4.84% | 1 | 3 | 0.9920 | 100, 71.4, 51.0, 36.4, 26.0, 18.6, 13.3, 9.49 | 1.40 | YES | |
| B12 | 32.5 | 0.113 | 9-Nov-04 | 0.355 | 1.15% | 1 | 3 | 0.9888 | 100, 71.4, 51.0, 36.4, 26.0, 18.6, 13.3, 9.49 | 1.40 | YES | |
| B13 | 41.6 | 0.144 | 10-Nov-04 | 0.362 | 5.53% | 1 | 4 | 0.9831 | 100, 71.4, 51.0, 36.4, 26.0, 18.6, 13.3, 9.49 | 1.40 | YES | |

## 3T3 NRU Positive Control (SLS) Data

| Experiment ID[1] 3T3 Cells | $IC_{50}$ (ug/mL) | $IC_{50}$ (mM) | Reference Substance Application Date | Mean VC OD[2] | Difference of right/left VC from mean VC[3] | Number of Points 0 - 50 %[4] | Number of Points 50 - 100 %[5] | $R^2$ [6] | Exposure Concentrations (ug/mL)[7] | Dilution Factor[8] | Acceptable Tests[9] | Rationale for Unacceptability |
|---|---|---|---|---|---|---|---|---|---|---|---|---|
| B14 | 21.4 | 0.074 | 16-Nov-04 | 0.445 | 4.98% | 3 | 3 | 0.9568 | 100, 71.4, 51.0, 36.4, 26.0, 18.6, 13.3, 9.49 | 1.40 | NO | IC50 out of range |
| B15 | 43.5 | 0.151 | 8-Dec-04 | 0.442 | 2.26% | 1 | 3 | 0.9932 | 100, 71.4, 51.0, 36.4, 26.0, 18.6, 13.3, 9.49 | 1.40 | YES | |
| B16 | 37.2 | 0.129 | 14-Dec-04 | 0.436 | 5.18% | 1 | 5 | 0.9757 | 100, 71.4, 51.0, 36.4, 26.0, 18.6, 13.3, 9.49 | 1.40 | YES | |
| B17 | 43.2 | 0.150 | 15-Dec-04 | 0.373 | 3.10% | 1 | 3 | 0.9869 | 100, 71.4, 51.0, 36.4, 26.0, 18.6, 13.3, 9.49 | 1.40 | YES | |
| B18 | 41.0 | 0.142 | 19-Jan-05 | 0.385 | 1.43% | 1 | 3 | 0.9739 | 100, 71.4, 51.0, 36.4, 26.0, 18.6, 13.3, 9.49, | 1.40 | YES | |

Abbreviations: NR=Neutral red; R&D=Research and development; PC=Positive control; C1 - C8=Concentration series applied to the the cells. C1 is the highest concentration and C8 is lowest; NA=Not Available; RC=Registry of Cytotoxicity;
[1] PC test ID
[2] Mean OD value for all VC wells in test plate
[3] Difference of right and left VC column of wells in the test plate
[4] % Viability values between 0 and 50% viability; test acceptance criterion; Phases Ia and Ib = number of points between 10 - 50%
[5] % Viability values between 50 and 100% viability; test acceptance criterion; Phases Ia and Ib = number of points between 50 - 90%
[6] Calculated value from the Prism® software
[7] Reference substance concentrations applied to the cells
[8] Step-wise dilution factor
[9] Determination whether test meets or doesn't meet test acceptance criteria
Shaded boxes identify values that do not meet the specific test acceptance criteria

**Acceptance Limits for PC $IC_{50}$**

| Phase | ECBC (ug/mL) | FAL (ug/mL) | IIVS (ug/mL) |
|---|---|---|---|
| Ib (3T3) | 28.8 – 47.7 | 25.2 – 59.5 | 34.5 – 47.3 |
| II (3T3) | 26.4 – 56.3 | 31.5 – 54.9 | 33.6 – 50.6 |
| III (3T3) | 30.8 – 51.6 | 27.2 – 64.7 | 31.8 – 49.3 |

# Appendix I4

## NHK NRU Positive Control (SLS) Data

***[This Page Intentionally Left Blank]***

## NHK NRU Positive Control (SLS) Data

| Experiment ID[1] NHK Cells | $IC_{50}$ (ug/mL) | $IC_{50}$ (mM) | Reference Substance Application Date | Mean VC OD[2] | Difference of right/left VC from mean VC[3] | Number of Points 0 - 50 %[4] | Number of Points 50 - 100 %[5] | $R^2$ [6] | Exposure Concentrations (ug/mL)[7] | Dilution Factor[8] | Acceptable Tests[9] | Rationale for Unacceptability |
|---|---|---|---|---|---|---|---|---|---|---|---|---|
| **ECBC** | | | | | | | | | | | | |
| **Phase Ia** | | | | | | | | | | | | |
| SLS-B1 | 5.47 | 0.019 | 12-Aug-02 | 0.559 | 13.30% | 1 | 0 | 0.9772 | 100, 68, 46.3, 31.5, 21.4, 14.6, 9.9, 6.7 | 1.47 | NO | 26% highest viability. No points between 50 & 90% viability. |
| SLS-B2 | 5.92 | 0.021 | 12-Aug-02 | 0.782 | 3.07% | 1 | 0 | 0.9717 | 100, 68, 46.3, 31.5, 21.4, 14.6, 9.9, 6.7 | 1.47 | NO | 32% highest viability. No points between 50 & 90% viability. |
| SLS-B3 | 3.40 | 0.012 | 12-Sep-02 | 0.285 | 21.73% | 3 | 0 | 0.8182 | 50, 34, 23.2, 15.8, 10.7, 7.3, 5, 3.4 | 1.47 | NO | VC difference > 15%. No points between 50 & 90% viability. |
| SLS-B4 | 3.91 | 0.014 | 12-Sep-02 | 0.369 | 3.41% | 3 | 0 | 0.8615 | 50, 34, 23.2, 15.8, 10.7, 7.3, 5, 3.4 | 1.47 | NO | No points between 50 & 90% viability. |
| SLS-B5 | 7.02 | 0.024 | 9-Sep-02 | 2.277 | 5.94% | 1 | 4 | 0.9229 | 23.2, 15.8, 10.7, 7.3, 5, 3.4, 2.3, 1.6 | 1.47 | YES | |
| SLS-B6 | 4.77 | 0.017 | 9-Sep-02 | 1.898 | 5.47% | 2 | 4 | 0.8750 | 23.2, 15.8, 10.7, 7.3, 5, 3.4, 2.3, 1.6 | 1.47 | YES | |
| SLS-B7) | 4.90 | 0.017 | 9-Sep-02 | 2.301 | 2.51% | 2 | 3 | 0.9331 | 23.2, 15.8, 10.7, 7.3, 5, 3.4, 2.3, 1.6 | 1.47 | YES | |
| SLS-B8 | 5.61 | 0.019 | 9-Sep-02 | 2.312 | 4.42% | 2 | 4 | 0.9273 | 23.2, 15.8, 10.7, 7.3, 5, 3.4, 2.3, 1.6 | 1.47 | NO | < 8 of 12 vehicle control replicates. |
| SLS-B9 | 6.65 | 0.023 | 10-Sep-02 | 1.181 | 6.10% | 1 | 5 | 0.8680 | 23.2, 15.8, 10.7, 7.3, 5, 3.4, 2.3, 1.6 | 1.47 | YES | |
| SLS-B10 | 3.71 | 0.013 | 10-Sep-02 | 1.007 | 7.50% | 4 | 2 | 0.9338 | 23.2, 15.8, 10.7, 7.3, 5, 3.4, 2.3, 1.6 | 1.47 | YES | |
| SLS-B11 | 3.84 | 0.013 | 9-Sep-02 | 1.531 | 11.76% | 3 | 3 | 0.9413 | 23.2, 15.8, 10.7, 7.3, 5, 3.4, 2.3, 1.6 | 1.47 | YES | |
| SLS-B12 (no re-feed) | 4.10 | 0.014 | 16-Sep-02 | 0.763 | 7.92% | 2 | 3 | 0.9683 | 23.2, 15.8, 10.7, 7.3, 5, 3.4, 2.3, 1.6 | 1.47 | YES | |
| SLS-B13 (re-feed) | 2.78 | 0.010 | 16-Sep-02 | 0.404 | 10.90% | 3 | 2 | 0.9131 | 23.2, 15.8, 10.7, 7.3, 5, 3.4, 2.3, 1.6 | 1.47 | YES | |
| SLS-B14 (no re-feed) | 2.82 | 0.010 | 16-Sep-02 | 0.924 | 0.12% | 3 | 2 | 0.9583 | 23.2, 15.8, 10.7, 7.3, 5, 3.4, 2.3, 1.6 | 1.47 | YES | |
| SLS-B15 (re-feed)[+] | 3.42 | 0.012 | 16-Sep-02 | 0.271 | 2.12% | 3 | 2 | 0.8829 | 23.2, 15.8, 10.7, 7.3, 5, 3.4, 2.3, 1.6 | 1.47 | YES | |
| SLS-B16 (no re-feed) | 2.71 | 0.009 | 23-Sep-02 | 0.313 | 9.38% | 2 | 2 | 0.9026 | 23.2, 15.8, 10.7, 7.3, 5, 3.4, 2.3, 1.6 | 1.47 | YES | |
| SLS-B17 (re-feed)[+] | 3.13 | 0.011 | 23-Sep-02 | 0.078 | 14.92% | 2 | 2 | 0.7987 | 23.2, 15.8, 10.7, 7.3, 5, 3.4, 2.3, 1.6 | 1.47 | NO | Inadequate curve fit. |
| SLS-B18 (no re-feed) | 3.19 | 0.011 | 23-Sep-02 | 0.258 | 19.12% | 3 | 2 | 0.8196 | 23.2, 15.8, 10.7, 7.3, 5, 3.4, 2.3, 1.6 | 1.47 | NO | VC difference > 15%. |
| SLS-B19 (re-feed) | 3.19 | 0.011 | 23-Sep-02 | 0.079 | 4.56% | 2 | 3 | 0.6930 | 23.2, 15.8, 10.7, 7.3, 5, 3.4, 2.3, 1.6 | 1.47 | NO | Inadequate curve fit. |
| SLS-B20 | 3.48 | 0.012 | 9-Oct-02 | 0.892 | 1.31% | 2 | 3 | 0.9455 | 23.2, 15.8, 10.7, 7.3, 5, 3.4, 2.3, 1.6 | 1.47 | YES | |
| SLS-B21 | 3.17 | 0.011 | 9-Oct-02 | 0.863 | 0.47% | 3 | 2 | 0.9539 | 23.2, 15.8, 10.7, 7.3, 5, 3.4, 2.3, 1.6 | 1.47 | YES | |

## NHK NRU Positive Control (SLS) Data

| Experiment ID[1] NHK Cells | $IC_{50}$ (ug/mL) | $IC_{50}$ (mM) | Reference Substance Application Date | Mean VC OD[2] | Difference of right/left VC from mean VC[3] | Number of Points 0 - 50 %[4] | Number of Points 50 - 100 %[5] | $R^2$ [6] | Exposure Concentrations (ug/mL)[7] | Dilution Factor[8] | Acceptable Tests[9] | Rationale for Unacceptability |
|---|---|---|---|---|---|---|---|---|---|---|---|---|
| **Phase Ib** | | | | | | | | | | | | |
| ECBC-NHK-Ib-01 SLS-P2 | 3.98 | 0.014 | 23-Jan-03 | 0.861 | 0.42% | 1 | 4 | 0.9559 | 20, 13.6, 9.25, 6.28, 4.27, 2.90, 1.97, 1.34 | 1.47 | YES | |
| ECBC-NHK-Ib-01 SLS-P1 | 4.57 | 0.016 | 23-Jan-03 | 0.788 | 2.50% | 2 | 4 | 0.9326 | 20, 13.6, 9.24, 6.28, 4.26, 2.90, 1.97, 1.34 | 1.47 | YES | |
| ECBC-NHK-Ib-02 SLS-P3 | 2.20 | 0.008 | 28-Jan-03 | 1.023 | 6.41% | 2 | 2 | 0.9391 | 20, 13.6, 9.24, 6.28, 4.26, 2.90, 1.97, 1.34 | 1.47 | YES | |
| ECBC-NHK-Ib-03 SLS-P4 | 3.16 | 0.011 | 3-Feb-03 | 1.135 | 1.67% | 2 | 3 | 0.9623 | 20, 13.6, 9.24, 6.28, 4.26, 2.90, 1.97, 1.34 | 1.47 | YES | |
| ECBC-NHK-Ib-04 SLS-P5 | 3.76 | 0.013 | 10-Feb-03 | 1.267 | 0.53% | 2 | 2 | 0.9559 | 20, 13.6, 9.24, 6.28, 4.26, 2.90, 1.97, 1.34 | 1.47 | YES | |
| ECBC-NHK-Ib-05 SLS-P7 | 3.75 | 0.013 | 24-Feb-03 | 1.154 | 1.28% | 2 | 3 | 0.9757 | 20, 13.6, 9.24, 6.28, 4.26, 2.90, 1.97, 1.34 | 1.47 | YES | |
| ECBC-NHK-Ib-05 SLS-P6 | 3.92 | 0.014 | 24-Feb-03 | 1.135 | 4.94% | 1 | 4 | 0.9316 | 20, 13.6, 9.24, 6.28, 4.26, 2.90, 1.97, 1.34 | 1.47 | YES | |
| ECBC-NHK-Ib-06 SLS-P8 | 3.05 | 0.011 | 17-Mar-03 | 0.964 | 7.32% | 2 | 3 | 0.9603 | 20, 13.6, 9.24, 6.28, 4.26, 2.90, 1.97, 1.34 | 1.47 | YES | |
| **Phase II** | | | | | | | | | | | | |
| SLS-P1 | 2.78 | 0.010 | 16-Jun-03 | 0.610 | 5.82% | 4 | 2 | 0.9491 | 20.0, 13.6, 9.3, 6.3, 4.3, 2.9, 2.0, 1.3 | 1.47 | YES | |
| SLS-P2 | 2.76 | 0.010 | 16-Jun-03 | 0.671 | 11.64% | 6 | 2 | 0.9346 | 20.0, 13.6, 9.3, 6.3, 4.3, 2.9, 2.0, 1.3 | 1.47 | YES | |
| SLS-P3 | 2.38 | 0.008 | 23-Jun-03 | 0.583 | 2.99% | 6 | 2 | 0.9074 | 20.0, 13.6, 9.3, 6.3, 4.3, 2.9, 2.0, 1.3 | 1.47 | YES | |
| SLS-P4 | 2.46 | 0.009 | 23-Jun-03 | 0.607 | 0.81% | 3 | 2 | 0.9167 | 20.0, 13.6, 9.3, 6.3, 4.3, 2.9, 2.0, 1.3 | 1.47 | YES | |
| SLS-P5 | 1.96 | 0.007 | 30-Jun-03 | 0.380 | 4.50% | 7 | 1 | 0.8647 | 20.0, 13.6, 9.3, 6.3, 4.3, 2.9, 2.0, 1.3 | 1.47 | YES | |
| SLS-P7 | 2.38 | 0.008 | 7-Jul-03 | 1.023 | 4.31% | 6 | 2 | 0.8829 | 20.0, 13.6, 9.3, 6.3, 4.3, 2.9, 2.0, 1.3 | 1.47 | YES | |
| SLS-P8 | 2.34 | 0.008 | 7-Jul-03 | 0.967 | 1.28% | 6 | 2 | 0.9475 | 20.0, 13.6, 9.3, 6.3, 4.3, 2.9, 2.0, 1.3 | 1.47 | YES | |
| SLS-P9 | 2.76 | 0.010 | 14-Jul-03 | 1.054 | 5.19% | 6 | 2 | 0.8590 | 20.0, 13.6, 9.3, 6.3, 4.3, 2.9, 2.0, 1.3 | 1.47 | YES | |
| SLS-P10 | 2.53 | 0.009 | 14-Jul-03 | 0.950 | 3.83% | 6 | 2 | 0.9316 | 20.0, 13.6, 9.3, 6.3, 4.3, 2.9, 2.0, 1.3 | 1.47 | YES | |
| SLS-P11 | 6.64 | 0.023 | 21-Jul-03 | 0.823 | 4.52% | 3 | 4 | 0.9677 | 20.0, 13.6, 9.3, 6.3, 4.3, 2.9, 2.0, 1.3 | 1.47 | NO | IC50 out of range |
| SLS-P12 | 5.75 | 0.020 | 21-Jul-03 | 0.748 | 1.27% | 3 | 5 | 0.9376 | 20.0, 13.6, 9.3, 6.3, 4.3, 2.9, 2.0, 1.3 | 1.47 | YES | |
| SLS-P13 | 7.88 | 0.027 | 28-Jul-03 | 0.088 | 4.75% | 3 | 1 | 0.7990 | 20.0, 13.6, 9.3, 6.3, 4.3, 2.9, 2.0, 1.3 | 1.47 | NO | IC50 out of range |
| SLS-P15 | 3.00 | 0.010 | 25-Aug-03 | 0.139 | 7.92% | 4 | 3 | 0.8397 | 20.0, 13.6, 9.3, 6.3, 4.3, 2.9, 2.0, 1.3 | 1.47 | YES | |
| SLS-P16 | 3.55 | 0.012 | 31-Aug-03 | 0.660 | 0.75% | 4 | 4 | 0.8686 | 20.0, 13.6, 9.3, 6.3, 4.3, 2.9, 2.0, 1.3 | 1.47 | YES | |
| SLS-P17 sealer | 3.64 | 0.013 | 31-Aug-03 | 0.642 | 4.51% | 4 | 4 | 0.9055 | 20.0, 13.6, 9.3, 6.3, 4.3, 2.9, 2.0, 1.3 | 1.47 | NO | R&D experiment |
| SLS-P18 | 3.50 | 0.012 | 1-Sep-03 | 0.471 | 7.27% | 4 | 3 | 0.9184 | 20.0, 13.6, 9.3, 6.3, 4.3, 2.9, 2.0, 1.3 | 1.47 | YES | |

## NHK NRU Positive Control (SLS) Data

| Experiment ID[1] NHK Cells | $IC_{50}$ (ug/mL) | $IC_{50}$ (mM) | Reference Substance Application Date | Mean VC OD[2] | Difference of right/left VC from mean VC[3] | Number of Points 0 - 50 %[4] | Number of Points 50 - 100 %[5] | $R^2$ [6] | Exposure Concentrations (ug/mL)[7] | Dilution Factor[8] | Acceptable Tests[9] | Rationale for Unacceptability |
|---|---|---|---|---|---|---|---|---|---|---|---|---|
| SLS-P19 | 2.68 | 0.009 | 2-Sep-03 | 0.761 | 0.66% | 6 | 2 | 0.9106 | 20.0, 13.6, 9.3, 6.3, 4.3, 2.9, 2.0, 1.3 | 1.47 | YES | |
| SLS-P20 | 3.14 | 0.011 | 2-Sep-03 | 0.761 | 6.29% | 4 | 4 | 0.8461 | 20.0, 13.6, 9.3, 6.3, 4.3, 2.9, 2.0, 1.3 | 1.47 | YES | |
| **Phase III** | | | | | | | | | | | | |
| SLS-P1 | 2.71 | 0.009 | 14-Jan-04 | 0.602 | 1.54% | 6 | 2 | 0.9562 | 20.0, 13.61, 9.26, 6.30, 4.28, 2.91, 1.98, 1.35 | 1.47 | YES | |
| SLS-P2 | 2.41 | 0.008 | 14-Jan-04 | 0.593 | 2.01% | 5 | 2 | 0.9500 | 20.0, 13.61, 9.26, 6.30, 4.28, 2.91, 1.98, 1.35 | 1.47 | YES | |
| SLS-P3 | 2.75 | 0.010 | 4-Feb-04 | 0.514 | 2.25% | 5 | 3 | 0.9521 | 20.0, 13.61, 9.26, 6.30, 4.28, 2.91, 1.98, 1.35 | 1.47 | YES | |
| SLS-P4 | 3.48 | 0.012 | 4-Feb-04 | 0.545 | 2.19% | 5 | 3 | 0.9372 | 20.0, 13.61, 9.26, 6.30, 4.28, 2.91, 1.98, 1.35 | 1.47 | YES | |
| SLS-P5 | 2.87 | 0.010 | 9-Feb-04 | 0.400 | 20.23% | 6 | 2 | 0.9787 | 20.0, 13.61, 9.26, 6.30, 4.28, 2.91, 1.98, 1.35 | 1.47 | NO | % VC difference >15 |
| SLS-P6 | 2.95 | 0.010 | 9-Feb-04 | 0.582 | 1.37% | 5 | 3 | 0.9743 | 20.0, 13.61, 9.26, 6.30, 4.28, 2.91, 1.98, 1.35 | 1.47 | YES | |
| SLS-P7 | 4.26 | 0.015 | 22-Mar-04 | 1.064 | 1.54% | 4 | 4 | 0.9309 | 20.0, 13.61, 9.26, 6.30, 4.28, 2.91, 1.98, 1.35 | 1.47 | YES | |
| SLS-P8 | 4.65 | 0.016 | 22-Mar-04 | 1.026 | 2.48% | 4 | 4 | 0.9055 | 20.0, 13.61, 9.26, 6.30, 4.28, 2.91, 1.98, 1.35 | 1.47 | YES | |
| SLS-P9 | 5.62 | 0.019 | 29-Mar-04 | 1.172 | 6.87% | 3 | 5 | 0.9149 | 20.0, 13.61, 9.26, 6.30, 4.28, 2.91, 1.98, 1.35 | 1.47 | YES | |
| SLS-P10 | 5.19 | 0.018 | 29-Mar-04 | 1.211 | 2.79% | 3 | 5 | 0.8495 | 20.0, 13.61, 9.26, 6.30, 4.28, 2.91, 1.98, 1.35 | 1.47 | YES | |
| SLS-P11 | 3.27 | 0.011 | 5-Apr-04 | 0.760 | 3.46% | 5 | 3 | 0.9345 | 20.0, 13.61, 9.26, 6.30, 4.28, 2.91, 1.98, 1.35 | 1.47 | YES | |
| SLS-P12 | 3.07 | 0.011 | 12-Apr-04 | 0.781 | 2.78% | 5 | 3 | 0.9583 | 20.0, 13.61, 9.26, 6.30, 4.28, 2.91, 1.98, 1.35 | 1.47 | YES | |
| SLS-P13 | 2.64 | 0.009 | 12-Apr-04 | 0.847 | 1.72% | 6 | 2 | 0.9227 | 20.0, 13.61, 9.26, 6.30, 4.28, 2.91, 1.98, 1.35 | 1.47 | YES | |
| SLS-P14 | 3.09 | 0.011 | 19-Apr-04 | 0.911 | 3.10% | 5 | 3 | 0.9541 | 20.0, 13.61, 9.26, 6.30, 4.28, 2.91, 1.98, 1.35 | 1.47 | YES | |
| SLS-P15 | 2.39 | 0.008 | 19-Apr-04 | 0.840 | 2.00% | 5 | 2 | 0.9495 | 20.0, 13.61, 9.26, 6.30, 4.28, 2.91, 1.98, 1.35 | 1.47 | YES | |
| SLS-P16 | 2.57 | 0.009 | 26-Apr-04 | 0.594 | 0.48% | 6 | 2 | 0.9722 | 20.0, 13.61, 9.26, 6.30, 4.28, 2.91, 1.98, 1.35 | 1.47 | YES | |
| SLS-P17 | 2.59 | 0.009 | 26-Apr-04 | 0.507 | 1.33% | 6 | 2 | 0.9605 | 20.0, 13.61, 9.26, 6.30, 4.28, 2.91, 1.98, 1.35 | 1.47 | YES | |
| SLS-P18 | 2.36 | 0.008 | 3-May-04 | 0.667 | 2.30% | 4 | 3 | 0.9382 | 20.0, 13.61, 9.26, 6.30, 4.28, 2.91, 1.98, 1.35 | 1.47 | YES | |
| SLS-P19 | 3.28 | 0.011 | 3-May-04 | 0.786 | 0.06% | 5 | 3 | 0.9557 | 20.0, 13.61, 9.26, 6.30, 4.28, 2.91, 1.98, 1.35 | 1.47 | YES | |
| SLS-P20 | 2.10 | 0.007 | 10-May-04 | 0.684 | 2.79% | 6 | 2 | 0.9517 | 20.0, 13.61, 9.26, 6.30, 4.28, 2.91, 1.98, 1.35 | 1.47 | YES | |
| SLS-P21 | 2.71 | 0.009 | 10-May-04 | 0.591 | 0.47% | 5 | 2 | 0.9609 | 20.0, 13.61, 9.26, 6.30, 4.28, 2.91, 1.98, 1.35 | 1.47 | YES | |
| SLS-P22 | 3.62 | 0.013 | 24-May-04 | 0.967 | 0.75% | 4 | 4 | 0.9317 | 20.0, 13.61, 9.26, 6.30, 4.28, 2.91, 1.98, 1.35 | 1.47 | YES | |
| SLS-P23 | 3.57 | 0.012 | 24-May-04 | 0.944 | 1.32% | 4 | 4 | 0.9164 | 20.0, 13.61, 9.26, 6.30, 4.28, 2.91, 1.98, 1.35 | 1.47 | YES | |

## NHK NRU Positive Control (SLS) Data

| Experiment ID[1] NHK Cells | $IC_{50}$ (ug/mL) | $IC_{50}$ (mM) | Reference Substance Application Date | Mean VC OD[2] | Difference of right/left VC from mean VC[3] | Number of Points 0 - 50 %[4] | Number of Points 50 - 100 %[5] | $R^2$ [6] | Exposure Concentrations (ug/mL)[7] | Dilution Factor[8] | Acceptable Tests[9] | Rationale for Unacceptability |
|---|---|---|---|---|---|---|---|---|---|---|---|---|
| SLS-P24 | 1.78 | 0.006 | 14-Jun-04 | 0.623 | 4.06% | 6 | 1 | 0.9431 | 20.0, 13.61, 9.26, 6.30, 4.28, 2.91, 1.98, 1.35 | 1.47 | YES | |
| SLS-P25 | 2.37 | 0.008 | 14-Jun-04 | 0.523 | 5.18% | 6 | 2 | 0.9303 | 20.0, 13.61, 9.26, 6.30, 4.28, 2.91, 1.98, 1.35 | 1.47 | YES | |
| SLS-P26 | 3.46 | 0.012 | 21-Jun-04 | 0.901 | 0.40% | 4 | 4 | 0.8960 | 20.0, 13.61, 9.26, 6.30, 4.28, 2.91, 1.98, 1.35 | 1.47 | YES | |
| SLS-P27 | 3.41 | 0.012 | 21-Jun-04 | 1.021 | 0.50% | 4 | 4 | 0.9365 | 20.0, 13.61, 9.26, 6.30, 4.28, 2.91, 1.98, 1.35 | 1.47 | YES | |
| SLS-P28 | 2.45 | 0.008 | 28-Jun-04 | 0.946 | 1.45% | 6 | 2 | 0.9476 | 20.0, 13.61, 9.26, 6.30, 4.28, 2.91, 1.98, 1.35 | 1.47 | YES | |
| SLS-P29 | 2.34 | 0.008 | 28-Jun-04 | 0.918 | 3.97% | 6 | 2 | 0.9517 | 20.0, 13.61, 9.26, 6.30, 4.28, 2.91, 1.98, 1.35 | 1.47 | YES | |
| SLS-P30 | 2.65 | 0.009 | 6-Jul-04 | 0.784 | 0.62% | 5 | 3 | 0.9483 | 20.0, 13.61, 9.26, 6.30, 4.28, 2.91, 1.98, 1.35 | 1.47 | YES | |
| SLS-P31 | 2.85 | 0.010 | 6-Jul-04 | 0.673 | 0.82% | 4 | 3 | 0.9655 | 20.0, 13.61, 9.26, 6.30, 4.28, 2.91, 1.98, 1.35 | 1.47 | YES | |
| SLS-P32 | 2.53 | 0.009 | 12-Jul-04 | 0.626 | 2.25% | 6 | 2 | 0.9348 | 20.0, 13.61, 9.26, 6.30, 4.28, 2.91, 1.98, 1.35 | 1.47 | YES | |
| SLS-P33 | 2.28 | 0.008 | 12-Jul-04 | 0.756 | 2.45% | 6 | 2 | 0.9521 | 20.0, 13.61, 9.26, 6.30, 4.28, 2.91, 1.98, 1.35 | 1.47 | YES | |
| SLS-P34 | 2.58 | 0.009 | 19-Jul-04 | 0.759 | 0.59% | 5 | 2 | 0.9536 | 20.0, 13.61, 9.26, 6.30, 4.28, 2.91, 1.98, 1.35 | 1.47 | YES | |
| SLS-P35 | 2.71 | 0.009 | 19-Jul-04 | 0.781 | 1.21% | 5 | 3 | 0.9599 | 20.0, 13.61, 9.26, 6.30, 4.28, 2.91, 1.98, 1.35 | 1.47 | YES | |
| SLS-P36 | 2.72 | 0.009 | 26-Jul-04 | 0.373 | 0.31% | 4 | 3 | 0.9411 | 20.0, 13.61, 9.26, 6.30, 4.28, 2.91, 1.98, 1.35 | 1.47 | YES | |
| SLS-P37 | 2.50 | 0.009 | 26-Jul-04 | 0.427 | 1.21% | 6 | 2 | 0.9482 | 20.0, 13.61, 9.26, 6.30, 4.28, 2.91, 1.98, 1.35 | 1.47 | YES | |
| SLS-P38 | 3.26 | 0.011 | 2-Aug-04 | 0.628 | 12.01% | 3 | 4 | 0.8904 | 20.0, 13.61, 9.26, 6.30, 4.28, 2.91, 1.98, 1.35 | 1.47 | YES | |
| SLS-P39 | 2.59 | 0.009 | 2-Aug-04 | 0.839 | 3.43% | 5 | 3 | 0.9302 | 20.0, 13.61, 9.26, 6.30, 4.28, 2.91, 1.98, 1.35 | 1.47 | YES | |
| SLS-P40 | 2.74 | 0.010 | 9-Aug-04 | 0.632 | 3.96% | 5 | 3 | 0.9279 | 20.0, 13.61, 9.26, 6.30, 4.28, 2.91, 1.98, 1.35 | 1.47 | YES | |
| SLS-P41 | 2.90 | 0.010 | 9-Aug-04 | 0.663 | 2.35% | 5 | 3 | 0.9480 | 20.0, 13.61, 9.26, 6.30, 4.28, 2.91, 1.98, 1.35 | 1.47 | YES | |
| SLS-P42 | 2.94 | 0.010 | 16-Aug-04 | 0.697 | 0.23% | 5 | 2 | 0.9599 | 20.0, 13.61, 9.26, 6.30, 4.28, 2.91, 1.98, 1.35 | 1.47 | YES | |
| SLS-P43 | 3.04 | 0.011 | 16-Aug-04 | 0.751 | 0.50% | 5 | 3 | 0.9240 | 20.0, 13.61, 9.26, 6.30, 4.28, 2.91, 1.98, 1.35 | 1.47 | YES | |
| SLS-P44 | 2.46 | 0.009 | 23-Aug-04 | 0.908 | 2.01% | 6 | 2 | 0.9487 | 20.0, 13.61, 9.26, 6.30, 4.28, 2.91, 1.98, 1.35 | 1.47 | YES | |
| SLS-P45 | 3.38 | 0.012 | 23-Aug-04 | 0.926 | 1.47% | 5 | 3 | 0.9464 | 20.0, 13.61, 9.26, 6.30, 4.28, 2.91, 1.98, 1.35 | 1.47 | YES | |
| SLS-P46 | 4.04 | 0.014 | 30-Aug-04 | 0.936 | 2.46% | 4 | 4 | 0.9318 | 20.0, 13.61, 9.26, 6.30, 4.28, 2.91, 1.98, 1.35 | 1.47 | YES | |
| SLS-P47 | 4.58 | 0.016 | 30-Aug-04 | 0.943 | 1.02% | 4 | 4 | 0.8656 | 20.0, 13.61, 9.26, 6.30, 4.28, 2.91, 1.98, 1.35 | 1.47 | YES | |
| SLS-P48 | 2.64 | 0.009 | 7-Sep-04 | 0.721 | 6.39% | 5 | 3 | 0.9543 | 20.0, 13.61, 9.26, 6.30, 4.28, 2.91, 1.98, 1.35 | 1.47 | YES | |
| SLS-P49 | 1.99 | 0.007 | 7-Sep-04 | 0.641 | 0.69% | 4 | 2 | 0.9585 | 20.0, 13.61, 9.26, 6.30, 4.28, 2.91, 1.98, 1.35 | 1.47 | YES | |

## NHK NRU Positive Control (SLS) Data

| Experiment ID[1] NHK Cells | $IC_{50}$ (ug/mL) | $IC_{50}$ (mM) | Reference Substance Application Date | Mean VC OD[2] | Difference of right/left VC from mean VC[3] | Number of Points 0 - 50 %[4] | Number of Points 50 - 100 %[5] | $R^2$ [6] | Exposure Concentrations (ug/mL)[7] | Dilution Factor[8] | Acceptable Tests[9] | Rationale for Unacceptability |
|---|---|---|---|---|---|---|---|---|---|---|---|---|
| SLS-P50 | 2.99 | 0.010 | 13-Sep-04 | 1.123 | 3.25% | 5 | 3 | 0.8908 | 20.0, 13.61, 9.26, 6.30, 4.28, 2.91, 1.98, 1.35 | 1.47 | YES | |
| SLS-P51 | 3.72 | 0.013 | 13-Sep-04 | 1.042 | 0.19% | 4 | 4 | 0.9217 | 20.0, 13.61, 9.26, 6.30, 4.28, 2.91, 1.98, 1.35 | 1.47 | YES | |
| SLS-P52 | 2.70 | 0.009 | 27-Sep-04 | 0.529 | 1.54% | 6 | 2 | 0.9508 | 20.0, 13.61, 9.26, 6.30, 4.28, 2.91, 1.98, 1.35 | 1.47 | YES | |
| SLS-P53 | 2.76 | 0.010 | 27-Sep-04 | 0.604 | 1.75% | 4 | 2 | 0.9270 | 20.0, 13.61, 9.26, 6.30, 4.28, 2.91, 1.98, 1.35 | 1.47 | YES | |
| SLS-P54 | 3.45 | 0.012 | 4-Oct-04 | 0.745 | 0.79% | 4 | 4 | 0.9265 | 20.0, 13.61, 9.26, 6.30, 4.28, 2.91, 1.98, 1.35 | 1.47 | YES | |
| SLS-P55 | 3.12 | 0.011 | 4-Oct-04 | 0.639 | 5.10% | 3 | 3 | 0.9318 | 20.0, 13.61, 9.26, 6.30, 4.28, 2.91, 1.98, 1.35 | 1.47 | YES | |
| SLS-P56 | 3.77 | 0.013 | 18-Oct-04 | 0.826 | 1.61% | 5 | 3 | 0.9471 | 20.0, 13.61, 9.26, 6.30, 4.28, 2.91, 1.98, 1.35 | 1.47 | YES | |
| SLS-P57 | 3.02 | 0.010 | 25-Oct-04 | 0.612 | 1.55% | 4 | 3 | 0.9690 | 20.0, 13.61, 9.26, 6.30, 4.28, 2.91, 1.98, 1.35 | 1.47 | YES | |
| SLS-P58 | 2.83 | 0.010 | 26-Oct-04 | 0.155 | 8.34% | 3 | 3 | 0.9318 | 20.0, 13.61, 9.26, 6.30, 4.28, 2.91, 1.98, 1.35 | 1.47 | YES | |

# FAL

## Phase Ia

| | | | | | | | | | | | | |
|---|---|---|---|---|---|---|---|---|---|---|---|---|
| B1(1a/NHK/DF4/FAL/SLS) | 8.13 | 0.028 | 9-Sep-02 | 1.333 | 6.67% | 1 | 2 | 0.9823 | 400, 200, 100, 50, 25, 12.5, 6.3, 3.1 | 2.00 | YES | |
| B2(1a/NHK/DF5/FAL/SLS) | 7.63 | 0.026 | 9-Sep-02 | 1.294 | 6.43% | 1 | 2 | 0.9889 | 400, 200, 100, 50, 25, 12.5, 6.3, 3.1 | 2.00 | YES | |
| B3(1a/NHK/DF6/FAL/SLS)+ | 8.06 | 0.028 | 9-Sep-02 | 1.289 | 6.39% | 1 | 2 | 0.9839 | 400, 200, 100, 50, 25, 12.5, 6.3, 3.1 | 2.00 | YES | |
| B4(1a/NHK/DF7/FAL/SLS) | 4.62 | 0.016 | 9-Sep-02 | 1.169 | 13.44% | 1 | 1 | 0.9683 | 400, 200, 100, 50, 25, 12.5, 6.3, 3.1 | 2.00 | YES | |
| B5(1a/NHK/DF8/FAL/SLS) | 5.23 | 0.018 | 9-Sep-02 | 1.089 | 9.96% | 1 | 1 | 0.9645 | 400, 200, 100, 50, 25, 12.5, 6.3, 3.1 | 2.00 | YES | |
| B6(1a/NHK/DF12/FAL/SLS) | 5.19 | 0.018 | 9-Sep-02 | 1.184 | 9.32% | 1 | 1 | 0.9253 | 400, 200, 100, 50, 25, 12.5, 6.3, 3.1 | 2.00 | YES | |
| B7(1a/NHK/DF14/FAL/SLS) | 6.72 | 0.023 | 11-Sep-02 | 0.333 | 0.73% | 2 | 2 | 0.8307 | 400, 200, 100, 50, 25, 12.5, 6.3, 3.1 | 2.00 | NO | Inadequate curve fit. |
| B8(1a/NHK/DF15/FAL/SLS) | 7.79 | 0.027 | 11-Sep-02 | 1.000 | 11.26% | 1 | 1 | 0.9666 | 400, 200, 100, 50, 25, 12.5, 6.3, 3.1 | 2.00 | YES | |
| B9(1a/NHK/DF16/FAL/SLS) | 7.63 | 0.026 | 11-Sep-02 | 1.076 | 8.62% | 1 | 2 | 0.9339 | 400, 200, 100, 50, 25, 12.5, 6.3, 3.1 | 2.00 | YES | |
| B10(1a/NHK/DF17/FAL/SLS)+ | 5.30 | 0.018 | 11-Sep-02 | 1.698 | 7.44% | 1 | 1 | 0.9810 | 400, 200, 100, 50, 25, 12.5, 6.3, 3.1 | 2.00 | YES | |
| 1 (no re-feed) | 7.70 | 0.027 | 23-Sep-02 | 1.534 | 4.79% | 1 | 5 | 0.9328 | 20, 13.6, 9.3, 6.3, 4.3, 2.9, 2.0, 1.4 | 1.47 | NO | 405 nm OD subtracted from 540 nm OD |
| 3 (no re-feed) | 8.66 | 0.030 | 23-Sep-02 | 1.559 | 0.38% | 1 | 5 | 0.9202 | 20, 13.6, 9.3, 6.3, 4.3, 2.9, 2.0, 1.4 | 1.47 | NO | 405 nm OD subtracted from 540 nm OD |
| 2 (re-feed) | 6.84 | 0.024 | 23-Sep-02 | 1.485 | 1.38% | 1 | 3 | 0.9695 | 20, 13.6, 9.3, 6.3, 4.3, 2.9, 2.0, 1.4 | 1.47 | NO | 405 nm OD subtracted from 540 nm OD |

## NHK NRU Positive Control (SLS) Data

| Experiment ID[1] NHK Cells | $IC_{50}$ (ug/mL) | $IC_{50}$ (mM) | Reference Substance Application Date | Mean VC OD[2] | Difference of right/left VC from mean VC[3] | Number of Points 0 - 50 %[4] | Number of Points 50 - 100 %[5] | $R^2$ [6] | Exposure Concentrations (ug/mL)[7] | Dilution Factor[8] | Acceptable Tests[9] | Rationale for Unacceptability |
|---|---|---|---|---|---|---|---|---|---|---|---|---|
| 4 (re-feed) | 5.60 | 0.019 | 23-Sep-02 | 1.301 | 14.78% | 1 | 4 | 0.8851 | 20, 13.6, 9.3, 6.3, 4.3, 2.9, 2.0, 1.4 | 1.47 | NO | 405 nm OD subtracted from 540 nm OD |
| 5 (no re-feed) | 8.26 | 0.029 | 25-Sep-02 | 1.122 | 9.11% | 2 | 2 | 0.8930 | 25, 17, 11.6, 7.87, 5.35, 3.64, 2.48, 1.69 | 1.47 | NO | 405 nm OD subtracted from 540 nm OD |
| 6 (no re-feed) | 11.75 | 0.041 | 25-Sep-02 | 0.633 | 16.43% | 2 | 4 | 0.6280 | 25, 17, 11.6, 7.87, 5.35, 3.64, 2.48, 1.69 | 1.47 | NO | 405 nm OD subtracted from 540 nm OD. VC difference > 15%. |
| 1a/NHK/DF23/FAL /SLS | 3.33 | 0.012 | 22-Oct-02 | 0.246 | 8.25% | 2 | 0 | 0.9216 | 50, 34, 23, 15.7, 10.7, 7.3, 4.9, 3.4 | 1.47 | NO | No point between 50 & 90% viability |
| 1a/NHK/DF24/FAL /SLS | 4.63 | 0.016 | 23-Oct-02 | 0.493 | 3.46% | 2 | 1 | 0.9721 | 50, 34, 23, 15.7, 10.7, 7.3, 4.9, 3.4 | 1.47 | YES | |
| 1a/NHK/DF25/FAL /SLS | 3.22 | 0.011 | 23-Oct-02 | 0.393 | 41.08% | 3 | 0 | 0.8731 | 50, 34, 23, 15.7, 10.7, 7.3, 4.9, 3.4 | 1.47 | NO | VC difference > 15%. No point between 50 & 90% viability. |
| 1a/NHK/DF26/FAL /SLS | 4.45 | 0.015 | 23-Oct-02 | 0.505 | 20.88% | 2 | 1 | 0.9385 | 50, 34, 23, 15.7, 10.7, 7.3, 4.9, 3.4 | 1.47 | NO | VC difference > 15%. |
| 1a/NHK/DF27/FAL /SLS | 4.41 | 0.015 | 23-Oct-02 | 0.484 | 7.93% | 2 | 1 | 0.9076 | 50, 34, 23, 15.7, 10.7, 7.3, 4.9, 3.4 | 1.47 | YES | |
| 1a/NHK/DF28/FAL /SLS | 6.66 | 0.023 | 24-Oct-02 | 0.693 | 1.54% | 1 | 2 | 0.8672 | 50, 34, 23, 15.7, 10.7, 7.3, 4.9, 3.4 | 1.47 | YES | |
| 1a/NHK/DF29/FAL /SLS | 5.57 | 0.019 | 24-Oct-02 | 0.545 | 9.79% | 1 | 1 | 0.9244 | 50, 34, 23, 15.7, 10.7, 7.3, 4.9, 3.4 | 1.47 | YES | |
| 1a/NHK/DF30/FAL /SLS | 14.43 | 0.050 | 19-Nov-02 | 1.094 | 2.67% | 1 | 6 | 0.6304 | 30.0, 23.08, 17.75, 13.65, 10.50, 8.08, 6.22, 4.78 | 1.30 | NO | Inadequate curve fit. |
| 1a/NHK/DF31/FAL /SLS+ | 13.38 | 0.046 | 19-Nov-02 | 1.354 | 3.71% | 2 | 6 | 0.6670 | 30.0, 23.08, 17.75, 13.65, 10.50, 8.08, 6.22, 4.78 | 1.30 | NO | Inadequate curve fit. |
| 1a/NHK/DF32/FAL /SLS | 13.37 | 0.046 | 19-Nov-02 | 0.890 | 3.18% | 2 | 5 | 0.6136 | 30.0, 23.08, 17.75, 13.65, 10.50, 8.08, 6.22, 4.78 | 1.30 | NO | Inadequate curve fit. |
| 1a/NHK/DF33/FAL /SLS+ | 11.89 | 0.041 | 19-Nov-02 | 0.766 | 7.34% | 3 | 3 | 0.8476 | 30.0, 23.08, 17.75, 13.65, 10.50, 8.08, 6.22, 4.78 | 1.30 | YES | |
| **Phase Ib** | | | | | | | | | | | | |
| A1 1b/NHKCTR1/FAL/ SLS | 3.74 | 0.013 | 11-Dec-02 | 0.164 | 7.05% | 1 | 1 | 0.9725 | 15, 11.54, 8.88, 6.83, 5.25, 4.04, 3.11, 2.39 | 1.30 | YES | |
| A2 1b/NHKCTR2/FAL/ SLS | 6.46 | 0.022 | 13-Dec-02 | 0.743 | 9.94% | 1 | 5 | 0.8017 | 15, 11.54, 8.88, 6.83, 5.25, 4.04, 3.11, 2.39 | 1.30 | YES | |
| A3 1b/NHK/CTR4/FAL / recalculated w/o outlier | 4.88 | 0.017 | 14-Jan-03 | 0.086 | 3.20% | 2 | 4 | 0.7526 | 15, 11.54, 8.88, 6.83, 5.25, 4.04, 3.11, 2.39 | 1.30 | NO | $R^2 < 0.8$ |

## NHK NRU Positive Control (SLS) Data

| Experiment ID[1] NHK Cells | $IC_{50}$ (ug/mL) | $IC_{50}$ (mM) | Reference Substance Application Date | Mean VC OD[2] | Difference of right/left VC from mean VC[3] | Number of Points 0 - 50 %[4] | Number of Points 50 - 100 %[5] | $R^2$ [6] | Exposure Concentrations (ug/mL)[7] | Dilution Factor[8] | Acceptable Tests[9] | Rationale for Unacceptability |
|---|---|---|---|---|---|---|---|---|---|---|---|---|
| A4 1b/NHK/CTR5/FAL | 3.12 | 0.011 | 15-Jan-03 | 0.146 | 3.42% | 2 | 1 | 0.8444 | 15, 11.54, 8.88, 6.83, 5.25, 4.04, 3.11, 2.39 | 1.30 | YES | |
| A5 1b/NHK/CTR6/FAL | NC | #VALUE! | 17-Jan-03 | 0.003 | 286.96% | 1 | 0 | NC | 15, 11.54, 8.88, 6.83, 5.25, 4.04, 3.11, 2.39 | 1.30 | NO | VC difference > 15%; no point between 50 & 90%; no $R^2$ or ICx |
| A6 1b/NHK/CTR7/FAL | 7.80 | 0.027 | 27-Jan-03 | 1.210 | 2.15% | 2 | 2 | 0.9626 | 15, 11.54, 8.88, 6.83, 5.25, 4.04, 3.11, 2.39 | 1.30 | YES | |
| A8 1b/NHK/CTR9/FAL | 5.48 | 0.019 | 3-Feb-03 | 0.935 | 12.58% | 1 | 4 | 0.9362 | 15, 11.54, 8.88, 6.83, 5.25, 4.04, 3.11, 2.39 | 1.30 | YES | |
| A9 1b/NHK/CTR10/FAL | 4.12 | 0.014 | 4-Feb-03 | 0.648 | 23.68% | 2 | 4 | 0.7160 | 15, 11.54, 8.88, 6.83, 5.25, 4.04, 3.11, 2.39 | 1.30 | NO | VC difference > 15%; $R^2$ < 0.8 |
| A10 1b/NHK/CTR11/FAL | 3.92 | 0.014 | 19-Mar-03 | 1.068 | 6.94% | 2 | 3 | 0.8868 | 15, 11.54, 8.88, 6.83, 5.25, 4.04, 3.11, 2.39 | 1.30 | YES | |
| A11 1b/NHK/CTR12/FAL | 5.08 | 0.018 | 20-Mar-03 | 1.542 | 0.79% | 3 | 3 | 0.8792 | 15, 11.54, 8.88, 6.83, 5.25, 4.04, 3.11, 2.39 | 1.30 | YES | |
| A12 1b/NHK/CTR13/FAL/SLS | 3.14 | 0.011 | 23-Mar-03 | 0.403 | 13.53% | 3 | 1 | 0.8720 | 15, 11.54, 8.88, 6.83, 5.25, 4.04, 3.11, 2.39 | 1.30 | YES | |
| 1b/NHK/CTR14/FAL/SLS | 3.32 | 0.012 | 24-Mar-03 | 0.831 | 3.67% | 1 | 2 | 0.9652 | 15, 11.54, 8.88, 6.83, 5.25, 4.04, 3.11, 2.39 | 1.30 | YES | |
| 1b/NHK/CTR15/FAL/SLS | 2.91 | 0.010 | 2-May-03 | 0.973 | 0.92% | 2 | 2 | 0.9586 | 15, 10.2, 6.94, 4.72, 3.21, 2.19, 1.49, 1.01 | 1.47 | YES | |
| 1b/NHK/DF1/FAL/SLS | 4.52 | 0.016 | 2-May-03 | 0.843 | 5.43% | 2 | 2 | 0.9229 | 10, 6.8, 4.63, 3.15, 2.14, 1.46, 0.99, 0.67 | 1.47 | YES | |
| **Phase II** | | | | | | | | | | | | |
| FAL.NHK.SLS.30.07.03 | 3.10 | 0.011 | 7-Jul-03 | 1.114 | 4.61% | 3 | 4 | 0.9350 | 12.0, 8.2, 5.6, 3.2, 2.6, 1.8, 1.2, 0.8 | 1.47 | YES | |
| FAL.NHK.SLS.010803 | 1.34 | 0.005 | 30-Jul-03 | 0.609 | 2.17% | 3 | 2 | 0.9358 | 12.0, 8.2, 5.6, 3.2, 2.6, 1.8, 1.2, 0.8 | 1.47 | YES | |
| FAL.NHK.SLS.07.08.03 | 1.40 | 0.005 | 5-Aug-03 | 0.526 | 4.20% | 4 | 2 | 0.9077 | 12.0, 8.2, 5.6, 3.2, 2.6, 1.8, 1.2, 0.8 | 1.47 | YES | |
| FAL.NHK.SLS.08.08.03 | 1.74 | 0.006 | 6-Aug-03 | 0.810 | 2.34% | 4 | 3 | 0.9517 | 12.0, 8.2, 5.6, 3.2, 2.6, 1.8, 1.2, 0.8 | 1.47 | YES | |
| FAL.NHK.SLS.13.08.03 | 2.75 | 0.010 | 11-Aug-03 | 0.639 | 0.03% | 4 | 4 | 0.3154 | 10, 6.8, 4.63, 3.15, 2.14, 1.46, 0.99, 0.67 | 1.47 | NO | low r2 |
| FAL.NHK.SLS.15.08.03 | 3.56 | 0.012 | 13-Aug-03 | 0.462 | 6.70% | 3 | 5 | 0.8954 | 10, 6.8, 4.63, 3.15, 2.14, 1.46, 0.99, 0.67 | 1.47 | YES | |
| FAL.NHK.SLS.230803 | 3.03 | 0.011 | 21-Aug-03 | 0.401 | 0.35% | 4 | 2 | 0.7230 | 10, 6.8, 4.6, 3.14, 2.14, 1.5, 0.9, 0.68 | 1.47 | NO | low r2 |
| FAL.NHK.SLS.280803 | 3.45 | 0.012 | 26-Aug-03 | 0.454 | 2.31% | 2 | 3 | 0.9372 | 10, 6.8, 4.6, 3.14, 2.14, 1.5, 0.9, 0.68 | 1.47 | YES | |

## NHK NRU Positive Control (SLS) Data

| Experiment ID[1] NHK Cells | $IC_{50}$ (ug/mL) | $IC_{50}$ (mM) | Reference Substance Application Date | Mean VC OD[2] | Difference of right/left VC from mean VC[3] | Number of Points 0 - 50 %[4] | Number of Points 50 - 100 %[5] | $R^2$ [6] | Exposure Concentrations (ug/mL)[7] | Dilution Factor[8] | Acceptable Tests[9] | Rationale for Unacceptability |
|---|---|---|---|---|---|---|---|---|---|---|---|---|
| FAL.NHK.SLS.050 903 | 3.20 | 0.011 | 3-Sep-03 | 0.110 | 8.54% | 2 | 3 | 0.9158 | 10, 6.8, 4.6, 3.14, 2.14, 1.5, 0.9, 0.68 | 1.47 | YES | |
| FAL.NHK.SLS.01. 10.03 | 4.59 | 0.016 | 29-Sep-03 | 1.292 | 1.62% | 2 | 6 | 0.9168 | 10, 6.8, 4.6, 3.14, 2.14, 1.5, 0.9, 0.68 | 1.47 | YES | |
| FAL.NHK.SLS.01. 10.03 | 5.50 | 0.019 | 29-Sep-03 | 0.895 | 20.89% | 2 | 5 | 0.9276 | 10, 6.8, 4.63, 3.15, 2.14, 1.46, 0.99, 0.67 | 1.47 | NO | % VC difference >15 |
| FAL.NHK.SLS.15. 10.03 | 2.90 | 0.010 | 13-Oct-03 | 0.547 | 4.65% | 3 | 5 | 0.8927 | 10, 6.8, 4.6, 3.14, 2.14, 1.5, 0.9, 0.68 | 1.47 | YES | |
| FAL.NHK.SLS.19. 10.03 | 3.85 | 0.013 | 17-Oct-03 | 0.340 | 2.89% | 3 | 5 | 0.9637 | 10, 6.8, 4.6, 3.14, 2.14, 1.5, 0.9, 0.68 | 1.47 | YES | |
| FAL.NHK.SLS.23. 10.03 | 4.90 | 0.017 | 21-Oct-03 | 0.279 | 8.61% | 3 | 2 | 0.7996 | 10, 6.8, 4.6, 3.14, 2.14, 1.5, 0.9, 0.68 | 1.47 | YES | |
| FAL.NHK.SLS.24. 10.03 | 2.96 | 0.010 | 22-Oct-03 | 0.932 | 1.31% | 3 | 5 | 0.9119 | 10, 6.8, 4.6, 3.14, 2.14, 1.5, 0.9, 0.68 | 1.47 | YES | |
| FAL.NHK.SLS.05.1 1.03 | 3.69 | 0.013 | 3-Nov-03 | 0.515 | 1.10% | 3 | 5 | 0.8516 | 10, 6.8, 4.6, 3.14, 2.14, 1.5, 0.9, 0.68 | 1.47 | YES | |
| FAL.NHK.SLS.07.1 1.03 | 3.95 | 0.014 | 5-Nov-03 | 0.351 | 4.18% | 3 | 3 | 0.9316 | 10, 6.8, 4.6, 3.14, 2.14, 1.5, 0.9, 0.68 | 1.47 | YES | |
| FAL.NHK.SLS.28.1 1.03 | 3.46 | 0.012 | 26-Nov-03 | 0.174 | 6.01% | 3 | 5 | 0.9543 | 10, 6.8, 4.6, 3.14, 2.14, 1.5, 0.9, 0.68 | 1.47 | YES | |
| **Phase III** | | | | | | | | | | | | |
| FAL.NHK.SLS.11.0 2.04 | 5.28 | 0.018 | 9-Feb-04 | 1.131 | 1.33% | 2 | 6 | 0.9062 | 10.0, 6.8, 4.63, 3.15, 2.14, 1.46, 0.99, 0.67 | 1.47 | NO | bottom not set to 0 |
| FAL.NHK.SLS.11.0 2.04 | 4.83 | 0.017 | 9-Feb-04 | 1.131 | 1.33% | 2 | 6 | 0.8318 | 10.0, 6.8, 4.63, 3.15, 2.14, 1.46, 0.99, 0.67 | 1.47 | NO | r2 < 0.85 |
| FAL.NHK.SLS.13. 02.03 | 3.63 | 0.013 | 11-Feb-04 | 0.106 | 6.36% | 4 | 4 | 0.7409 | 10.0, 6.8, 4.63, 3.15, 2.14, 1.46, 0.99, 0.67 | 1.47 | NO | r2 < 0.85 |
| FAL.NHK.SLS.18. 02.04 | 6.22 | 0.022 | 16-Feb-04 | 0.155 | 6.02% | 2 | 2 | 0.4330 | 10.0, 6.8, 4.63, 3.15, 2.14, 1.46, 0.99, 0.67 | 1.47 | NO | r2 < 0.85; IC50 out of range |
| FAL.NHK.SLS.20. 02.03 | 2.24 | 0.008 | 18-Feb-04 | 0.254 | 1.35% | 4 | 4 | 0.9233 | 10.0, 6.8, 4.63, 3.15, 2.14, 1.46, 0.99, 0.67 | 1.47 | YES | |
| FAL.NHK.SLS/NB. 26.02.03 | 3.25 | 0.011 | 24-Feb-04 | 0.292 | 4.37% | 4 | 4 | 0.9347 | 10.0, 6.8, 4.63, 3.15, 2.14, 1.46, 0.99, 0.67 | 1.47 | YES | |
| FAL.NHK.SLS/MO .26.02.03 | 4.04 | 0.014 | 24-Feb-04 | 0.280 | 4.67% | 3 | 3 | 0.9265 | 10.0, 6.8, 4.63, 3.15, 2.14, 1.46, 0.99, 0.67 | 1.47 | YES | |
| FAL.NHK.SLS.27. 02.03 | 2.78 | 0.010 | 25-Feb-04 | 0.472 | 3.50% | 3 | 5 | 0.9173 | 10.0, 6.8, 4.63, 3.15, 2.14, 1.46, 0.99, 0.67 | 1.47 | YES | |
| FAL.NHK.SLS.18. 03.03 | 4.48 | 0.016 | 16-Mar-04 | 0.424 | 2.34% | 3 | 5 | 0.8934 | 10.0, 6.8, 4.63, 3.15, 2.14, 1.46, 0.99, 0.67 | 1.47 | YES | |
| FAL.NHK.SLS.19. 03.03 | 2.76 | 0.010 | 17-Mar-04 | 0.555 | 1.67% | 3 | 5 | 0.8882 | 10.0, 6.8, 4.63, 3.15, 2.14, 1.46, 0.99, 0.67 | 1.47 | YES | |
| FAL.NHK.SLS.25. 03.03 | 2.93 | 0.010 | 23-Mar-04 | 0.584 | 8.67% | 4 | 4 | 0.9493 | 10.0, 6.8, 4.63, 3.15, 2.14, 1.46, 0.99, 0.67 | 1.47 | YES | |
| FAL.NHK.SLS.26. 03.04 | 3.96 | 0.014 | 24-Mar-04 | 0.593 | 3.86% | 3 | 5 | 0.9244 | 10.0, 6.8, 4.63, 3.15, 2.14, 1.46, 0.99, 0.67 | 1.47 | YES | |
| FAL.NHK.SLS.28. 04.03 | 3.06 | 0.011 | 26-Apr-04 | 0.762 | 0.95% | 3 | 5 | 0.9561 | 10.0, 6.8, 4.63, 3.15, 2.14, 1.46, 0.99, 0.67 | 1.47 | YES | |

## NHK NRU Positive Control (SLS) Data

| Experiment ID[1] NHK Cells | $IC_{50}$ (ug/mL) | $IC_{50}$ (mM) | Reference Substance Application Date | Mean VC OD[2] | Difference of right/left VC from mean VC[3] | Number of Points 0 - 50 %[4] | Number of Points 50 - 100 %[5] | $R^2$ [6] | Exposure Concentrations (ug/mL)[7] | Dilution Factor[8] | Acceptable Tests[9] | Rationale for Unacceptability |
|---|---|---|---|---|---|---|---|---|---|---|---|---|
| FAL.NHK.SLS.13.05.04 | 2.79 | 0.010 | 11-May-04 | 0.612 | 0.80% | 4 | 4 | 0.9782 | 10, 6.80, 4.63, 3.15, 2.14, 1.46, 0.99, 0.67 | 1.47 | YES | |
| FAL.NHK.SLS.14.05.03 | 3.80 | 0.013 | 12-May-04 | 0.594 | 7.47% | 3 | 3 | 0.9301 | 10.0, 6.80, 4.63, 3.15, 2.14, 1.46, 0.99, 0.67 | 1.47 | YES | |
| FAL.NHK.SLS.25.0 | 2.62 | 0.009 | 23-Jun-04 | 1.347 | 0.43% | 4 | 4 | 0.8730 | 10.0, 6.80, 4.63, 3.15, 2.14, 1.46, 0.99, 0.67 | 1.47 | YES | |
| FAL.NHK.SLS.28.07.04 | NA | NA | 26-Jul-04 | 0.073 | 22.93% | 2 | 5 | 0.7622 | 10.0, 6.80, 4.63, 3.15, 2.14, 1.46, 0.99, 0.67 | 1.47 | NO | % VC differnece > 15; r2 too low |
| FAL.NHK.SLS.11.08.04 | 3.77 | 0.013 | 9-Aug-04 | 0.512 | 4.88% | 3 | 5 | 0.8470 | 10.0, 6.80, 4.63, 3.15, 2.14, 1.46, 0.99, 0.67 | 1.47 | YES | |
| FAL.NHK.SLS.12.08.04 | 5.86 | 0.020 | 10-Aug-04 | 0.701 | 8.17% | 2 | 1 | 0.9776 | 10.0, 6.80, 4.63, 3.15, 2.14, 1.46, 0.99, 0.67 | 1.47 | NO | IC50 out of range |
| FAL.NHK.SLS-RB.19.08.04 | 4.49 | 0.016 | 17-Aug-04 | 0.337 | 0.10% | 3 | 1 | 0.7397 | 10.0, 6.80, 4.63, 3.15, 2.14, 1.46, 0.99, 0.67 | 1.47 | NO | r2 too low |
| FAL.NHK.SLS-NB.19.08.04 | 1.85 | 0.006 | 17-Aug-04 | 0.537 | 10.04% | 3 | 4 | 0.8589 | 10.0, 6.80, 4.63, 3.15, 2.14, 1.46, 0.99, 0.67 | 1.47 | YES | |
| FAL.NHK.SLS.20.08.04 | 3.70 | 0.013 | 18-Aug-04 | 0.738 | 8.90% | 3 | 5 | 0.9750 | 10.0, 6.80, 4.63, 3.15, 2.14, 1.46, 0.99, 0.67 | 1.47 | YES | |
| FAL.NHK.SLS.25.08.04 | 3.56 | 0.012 | 23-Aug-04 | 0.991 | 2.23% | 2 | 6 | 0.8697 | 10.0, 6.80, 4.63, 3.15, 2.14, 1.46, 0.99, 0.67 | 1.47 | YES | |
| FAL.NHK.SLS-RB.20.08.04 (should be 25.08.04) | 5.20 | 0.018 | 23-Aug-04 | 0.645 | 2.80% | 2 | 1 | 0.8472 | 10.0, 6.80, 4.63, 3.15, 2.14, 1.46, 0.99, 0.67 | 1.47 | YES | |
| FAL.NHK.SLS.27.08.04 | 3.00 | 0.010 | 23-Aug-04 | 0.546 | 7.84% | 3 | 5 | 0.8783 | 10.0, 6.80, 4.63, 3.15, 2.14, 1.46, 0.99, 0.67 | 1.47 | YES | |
| FAL.NHK.SLS.17.09.04 | 3.30 | 0.011 | 15-Sep-04 | 0.803 | 1.34% | 3 | 5 | 0.9408 | 10.0, 6.80, 4.63, 3.15, 2.14, 1.46, 0.99, 0.67 | 1.47 | YES | |
| FAL.NHK.SLS.30.09.***03*** | 2.78 | 0.010 | 28-Sep-04 | 0.562 | 3.86% | 3 | 4 | 0.9559 | 5000, 2326, 1082, 503, 234, 109, 50.6, 23.6 | 1.47 | YES | |
| FAL.NHK.SLS.01.10.04 | 8.25 | 0.029 | 29-Sep-04 | 1.103 | 3.49% | 1 | 7 | 0.9669 | 10.0, 6.80, 4.63, 3.15, 2.14, 1.46, 0.99, 0.67 | 1.47 | NO | IC50 out of range |
| FAL.NHK.SLS.07.10.***03*** | 2.23 | 0.008 | 5-Oct-04 | 0.602 | 6.09% | 4 | 4 | 0.9488 | 10.0, 6.80, 4.63, 3.15, 2.14, 1.46, 0.99, 0.67 | 1.47 | YES | |

## NHK NRU Positive Control (SLS) Data

| Experiment ID[1] NHK Cells | $IC_{50}$ (ug/mL) | $IC_{50}$ (mM) | Reference Substance Application Date | Mean VC OD[2] | Difference of right/left VC from mean VC[3] | Number of Points 0 - 50 %[4] | Number of Points 50 - 100 %[5] | $R^2$ [6] | Exposure Concentrations (ug/mL)[7] | Dilution Factor[8] | Acceptable Tests[9] | Rationale for Unacceptability |
|---|---|---|---|---|---|---|---|---|---|---|---|---|
| FAL.NHK.SLS.08.10.***03*** | 2.91 | 0.010 | 6-Oct-04 | 0.827 | 4.33% | 3 | 5 | 0.9222 | 10.0, 6.80, 4.63, 3.15, 2.14, 1.46, 0.99, 0.67 | 1.47 | YES | |
| FAL.NHK.SLS.20.10.04 | 4.95 | 0.017 | 18-Oct-04 | 1.231 | 5.58% | 2 | 6 | 0.9099 | 10.0, 6.80, 4.63, 3.15, 2.14, 1.46, 0.99, 0.67 | 1.47 | YES | |
| FAL.NHK.SLS.22.10.04 (NB) | 3.62 | 0.013 | 20-Oct-04 | 0.675 | 0.86% | 3 | 5 | 0.9405 | 10.0, 6.80, 4.63, 3.15, 2.14, 1.46, 0.99, 0.67 | 1.47 | YES | |
| FAL.NHK.SLS.28.10.04 | 3.39 | 0.012 | 26-Oct-04 | 0.641 | 7.85% | 3 | 5 | 0.9366 | 10.0, 6.80, 4.63, 3.15, 2.14, 1.46, 0.99, 0.67 | 1.47 | YES | |
| FAL.NHK.SLS.29.10.04 | 2.33 | 0.008 | 27-Oct-04 | 0.502 | 1.46% | 4 | 4 | 0.9531 | 10.0, 6.80, 4.63, 3.15, 2.14, 1.46, 0.99, 0.67 | 1.47 | YES | |
| FAL.NHK.SLS.03.11.04 | 3.19 | 0.011 | 1-Nov-04 | 0.447 | 8.60% | 3 | 5 | 0.9331 | 10.0, 6.80, 4.63, 3.15, 2.14, 1.46, 0.99, 0.67 | 1.47 | YES | |
| FAL.NHK.SLS.05.11.04 | 2.16 | 0.007 | 3-Nov-04 | 0.538 | 0.62% | 4 | 4 | 0.9467 | 10.0, 6.80, 4.63, 3.15, 2.14, 1.46, 0.99, 0.67 | 1.47 | YES | |
| FAL.NHK.SLS.10.11.04 | 4.07 | 0.014 | 8-Nov-04 | 1.011 | 0.89% | 2 | 6 | 0.9210 | 10.0, 6.80, 4.63, 3.15, 2.14, 1.46, 0.99, 0.67 | 1.47 | YES | |
| FAL.NHK.SLS.12.11.04 | 3.76 | 0.013 | 10-Nov-04 | 0.742 | 3.04% | 2 | 6 | 0.9085 | 10.0, 6.80, 4.63, 3.15, 2.14, 1.46, 0.99, 0.67 | 1.47 | YES | |
| FAL.NHK.SLS.17.11.04 | 4.04 | 0.014 | 15-Nov-04 | 1.050 | 1.74% | 2 | 6 | 0.8732 | 10.0, 6.80, 4.63, 3.15, 2.14, 1.46, 0.99, 0.67 | 1.47 | YES | |
| FAL.NHK.SLS.19.11.04 | 3.91 | 0.014 | 17-Nov-04 | 0.509 | 4.62% | 3 | 3 | 0.9793 | 10.0, 6.80, 4.63, 3.15, 2.14, 1.46, 0.99, 0.67 | 1.47 | YES | |
| FAL.NHK.SLS.24.11.04 | 4.09 | 0.014 | 22-Nov-04 | 1.124 | 2.91% | 2 | 6 | 0.8654 | 10.0, 6.80, 4.63, 3.15, 2.14, 1.46, 0.99, 0.67 | 1.47 | YES | |
| FAL.NHK.SLS.26.11.04 | 3.00 | 0.010 | 24-Nov-04 | 0.620 | 1.45% | 3 | 5 | 0.9524 | 10.0, 6.80, 4.63, 3.15, 2.14, 1.46, 0.99, 0.67 | 1.47 | YES | |
| FAL.NHK.SLS(MO).10.12.04 | 6.02 | 0.021 | 8-Dec-04 | 1.017 | 1.35% | 2 | 6 | 0.8137 | 10.0, 6.80, 4.63, 3.15, 2.14, 1.46, 0.99, 0.67 | 1.47 | YES | |
| FAL.NHK.SLS.10.12.04 | 4.18 | 0.014 | 8-Dec-04 | 0.928 | 0.25% | 3 | 5 | 0.9170 | 10.0, 6.80, 4.63, 3.15, 2.14, 1.46, 0.99, 0.67 | 1.47 | NO | IC50 out of range; low r2 |

## NHK NRU Positive Control (SLS) Data

| Experiment ID[1] NHK Cells | $IC_{50}$ (ug/mL) | $IC_{50}$ (mM) | Reference Substance Application Date | Mean VC OD[2] | Difference of right/left VC from mean VC[3] | Number of Points 0 - 50 %[4] | Number of Points 50 - 100 %[5] | $R^2$ [6] | Exposure Concentrations (ug/mL)[7] | Dilution Factor[8] | Acceptable Tests[9] | Rationale for Unacceptability |
|---|---|---|---|---|---|---|---|---|---|---|---|---|
| **IIVS** | | | | | | | | | | | | |
| **Phase Ia** | | | | | | | | | | | | |
| B1 | 3.70 | 0.013 | 19-Aug-02 | 0.785 | 11.83% | 1 | 5 | 0.8579 | 10, 5.6, 3.2, 1.8, 1.0, 0.6, 0.3, 0.2 | 1.79 | YES | |
| B2 | 2.93 | 0.010 | 19-Aug-02 | 0.778 | 5.60% | 1 | 6 | 0.8406 | 10, 5.6, 3.2, 1.8, 1.0, 0.6, 0.3, 0.2 | 1.79 | YES | |
| B3 | 59.28 | 0.206 | 24-Aug-02 | 1.883 | 3.30% | 1 | 6 | 0.0862 | 10, 6.8, 4.6, 3.2, 2.2, 1.5, 1.0, 0.7 | 1.47 | NO | Major precipitation problems |
| B4 | 10.06 | 0.035 | 24-Aug-02 | 1.680 | 8.59% | 0 | 2 | 0.6253 | 10, 6.8, 4.6, 3.2, 2.2, 1.5, 1.0, 0.7 | 1.47 | NO | Major precipitation problems. No points between 10 & 50%. |
| B5 | 3.72 | 0.013 | 25-Aug-02 | 1.129 | 7.89% | 1 | 5 | 0.9213 | 10, 6.8, 4.6, 3.2, 2.2, 1.5, 1.0, 0.7 | 1.47 | YES | |
| B6 | 3.88 | 0.013 | 25-Aug-02 | 1.130 | 5.10% | 1 | 5 | 0.8956 | 10, 6.8, 4.6, 3.2, 2.2, 1.5, 1.0, 0.7 | 1.47 | YES | |
| B7 | 3.57 | 0.012 | 26-Aug-02 | 1.083 | 7.51% | 1 | 6 | 0.8251 | 10, 6.8, 4.6, 3.2, 2.2, 1.5, 1.0, 0.7 | 1.47 | YES | |
| B8 | 3.30 | 0.011 | 26-Aug-02 | 0.867 | 11.48% | 3 | 5 | 0.8592 | 10, 6.8, 4.6, 3.2, 2.2, 1.5, 1.0, 0.7 | 1.47 | YES | |
| B9 | 3.85 | 0.013 | 27-Aug-02 | 0.985 | 10.80% | 2 | 5 | 0.8840 | 10, 6.8, 4.6, 3.2, 2.2, 1.5, 1.0, 0.7 | 1.47 | YES | |
| B10 | 3.72 | 0.013 | 27-Aug-02 | 1.026 | 2.70% | 1 | 6 | 0.8212 | 10, 6.8, 4.6, 3.2, 2.2, 1.5, 1.0, 0.7 | 1.47 | YES | |
| B11 | 4.92 | 0.017 | 4-Sep-02 | 1.240 | 0.59% | 1 | 5 | 0.8987 | 10, 6.8, 4.6, 3.2, 2.2, 1.5, 1.0, 0.7 | 1.47 | YES | |
| B12 | 4.13 | 0.014 | 4-Sep-02 | 1.218 | 4.81% | 1 | 6 | 0.8888 | 10, 6.8, 4.6, 3.2, 2.2, 1.5, 1.0, 0.7 | 1.47 | YES | |
| B13 | 4.02 | 0.014 | 5-Sep-02 | 1.082 | 0.78% | 1 | 6 | 0.8669 | 10, 6.8, 4.6, 3.2, 2.2, 1.5, 1.0, 0.7 | 1.47 | YES | |
| B14 | 4.18 | 0.014 | 5-Sep-02 | 1.111 | 3.22% | 1 | 6 | 0.8742 | 10, 6.8, 4.6, 3.2, 2.2, 1.5, 1.0, 0.7 | 1.47 | YES | |
| B15 | 4.36 | 0.015 | 6-Sep-02 | 0.693 | 12.53% | 1 | 6 | 0.8170 | 10, 6.8, 4.6, 3.2, 2.2, 1.5, 1.0, 0.7 | 1.47 | YES | |
| B16 | 5.07 | 0.018 | 6-Sep-02 | 0.747 | 12.82% | 2 | 6 | 0.7516 | 10, 6.8, 4.6, 3.2, 2.2, 1.5, 1.0, 0.7 | 1.47 | NO | Inadequate curve fit. |
| B17 | 3.70 | 0.013 | 7-Sep-02 | 0.550 | 3.51% | 1 | 5 | 0.8953 | 10, 6.8, 4.6, 3.2, 2.2, 1.5, 1.0, 0.7 | 1.47 | YES | |
| B18 | 3.50 | 0.012 | 7-Sep-02 | 0.558 | 9.32% | 1 | 6 | 0.8518 | 10, 6.8, 4.6, 3.2, 2.2, 1.5, 1.0, 0.7 | 1.47 | YES | |
| B19 | 3.45 | 0.012 | 8-Sep-02 | 0.658 | 10.32% | 1 | 6 | 0.8785 | 10, 6.8, 4.6, 3.2, 2.2, 1.5, 1.0, 0.7 | 1.47 | YES | |
| B20 | 3.03 | 0.011 | 8-Sep-02 | 0.682 | 5.43% | 2 | 5 | 0.9061 | 10, 6.8, 4.6, 3.2, 2.2, 1.5, 1.0, 0.7 | 1.47 | YES | |
| B23 (no re-feed) | 3.54 | 0.012 | 21-Sep-02 | 1.084 | 4.29% | 2 | 4 | 0.9573 | 10, 6.8, 4.6, 3.2, 2.2, 1.5, 1.0, 0.7 | 1.47 | YES | |
| B23 (re-feed) | 3.46 | 0.012 | 21-Sep-02 | 0.824 | 4.80% | 2 | 3 | 0.9531 | 10, 6.8, 4.6, 3.2, 2.2, 1.5, 1.0, 0.7 | 1.47 | YES | |

## NHK NRU Positive Control (SLS) Data

| Experiment ID[1] NHK Cells | $IC_{50}$ (ug/mL) | $IC_{50}$ (mM) | Reference Substance Application Date | Mean VC OD[2] | Difference of right/left VC from mean VC[3] | Number of Points 0 - 50 %[4] | Number of Points 50 - 100 %[5] | $R^2$ [6] | Exposure Concentrations (ug/mL)[7] | Dilution Factor[8] | Acceptable Tests[9] | Rationale for Unacceptability |
|---|---|---|---|---|---|---|---|---|---|---|---|---|
| B24 (no re-feed) | 3.89 | 0.013 | 21-Sep-02 | 1.120 | 0.13% | 1 | 5 | 0.9361 | 10, 6.8, 4.6, 3.2, 2.2, 1.5, 1.0, 0.7 | 1.47 | YES | |
| B24 (re-feed) | 3.72 | 0.013 | 21-Sep-02 | 0.784 | 2.36% | 2 | 4 | 0.9265 | 10, 6.8, 4.6, 3.2, 2.2, 1.5, 1.0, 0.7 | 1.47 | YES | |
| B25 (no re-feed) | 3.92 | 0.014 | 22-Sep-02 | 1.078 | 1.34% | 1 | 5 | 0.9426 | 10, 6.8, 4.6, 3.2, 2.2, 1.5, 1.0, 0.7 | 1.47 | YES | |
| B25 (re-feed) | 4.19 | 0.015 | 22-Sep-02 | 0.938 | 2.24% | 2 | 5 | 0.9540 | 10, 6.8, 4.6, 3.2, 2.2, 1.5, 1.0, 0.7 | 1.47 | YES | |
| B26 (no re-feed) | 3.44 | 0.012 | 22-Sep-02 | 1.037 | 7.19% | 2 | 3 | 0.9495 | 10, 6.8, 4.6, 3.2, 2.2, 1.5, 1.0, 0.7 | 1.47 | YES | |
| B26 (re-feed) | 3.64 | 0.013 | 22-Sep-02 | 0.775 | 4.29% | 2 | 4 | 0.9491 | 10, 6.8, 4.6, 3.2, 2.2, 1.5, 1.0, 0.7 | 1.47 | YES | |
| B27 (no re-feed) | 2.87 | 0.010 | 23-Sep-02 | 1.050 | 1.79% | 2 | 5 | 0.8907 | 10, 6.8, 4.6, 3.2, 2.2, 1.5, 1.0, 0.7 | 1.47 | YES | |
| B27 ( re-feed) | 2.68 | 0.009 | 23-Sep-02 | 0.841 | 2.77% | 2 | 5 | 0.9212 | 10, 6.8, 4.6, 3.2, 2.2, 1.5, 1.0, 0.7 | 1.47 | YES | |
| B28 (no re-feed) | 3.30 | 0.011 | 23-Sep-02 | 1.029 | 0.04% | 2 | 5 | 0.9088 | 10, 6.8, 4.6, 3.2, 2.2, 1.5, 1.0, 0.7 | 1.47 | YES | |
| B28 (re-feed) | 2.78 | 0.010 | 23-Sep-02 | 0.819 | 3.87% | 3 | 4 | 0.9476 | 10, 6.8, 4.6, 3.2, 2.2, 1.5, 1.0, 0.7 | 1.47 | YES | |
| **Phase Ib** | | | | | | | | | | | | |
| Preliminary | 2.78 | 0.010 | 4-Jan-03 | 0.631 | 3.03% | 3 | 3 | 0.9588 | 10, 6.8, 4.6, 3.2, 2.2, 1.47, 1.0, 0.68 | 1.47 | YES | |
| B1 | 2.98 | 0.010 | 17-Jan-03 | 0.518 | 0.50% | 2 | 5 | 0.9403 | 10, 6.8, 4.6, 3.2, 2.2, 1.47, 1.0, 0.68 | 1.47 | YES | |
| B2 | 3.31 | 0.011 | 18-Jan-03 | 0.726 | 9.52% | 2 | 3 | 0.9621 | 10, 6.8, 4.6, 3.2, 2.2, 1.47, 1.0, 0.68 | 1.47 | YES | |
| B3 | 3.00 | 0.010 | 31-Jan-03 | 0.845 | 3.64% | 2 | 4 | 0.9420 | 10, 6.8, 4.6, 3.2, 2.2, 1.47, 1.0, 0.68 | 1.47 | YES | |
| B4 | 3.64 | 0.013 | 1-Feb-03 | 0.781 | 1.49% | 2 | 4 | 0.9550 | 10, 6.8, 4.6, 3.2, 2.2, 1.47, 1.0, 0.68 | 1.47 | YES | |
| **Phase II** | | | | | | | | | | | | |
| A2 | 3.11 | 0.011 | 9-Aug-03 | 0.682 | 5.04% | 3 | 4 | 0.9538 | 10, 6.7, 4.4, 3.0, 2.0, 1.3, 0.88, 0.59 | 1.50 | YES | |
| B1 | 3.24 | 0.011 | 16-Aug-03 | 0.351 | 7.73% | 3 | 3 | 0.9661 | 10, 6.7, 4.4, 3.0, 2.0, 1.3, 0.88, 0.59 | 1.50 | YES | |
| B2 | 4.42 | 0.015 | 17-Aug-03 | 0.26 | 3.34% | 2 | 4 | 0.9394 | 10, 6.7, 4.4, 3.0, 2.0, 1.3, 0.88, 0.59 | 1.50 | YES | |
| B3 | 4.10 | 0.014 | 18-Aug-03 | 0.284 | 4.05% | 3 | 2 | 0.9569 | 10, 6.7, 4.4, 3.0, 2.0, 1.3, 0.88, 0.59 | 1.50 | YES | |
| B4 | 4.52 | 0.016 | 25-Aug-03 | 0.201 | 2.12% | 2 | 4 | 0.9434 | 10, 6.7, 4.4, 3.0, 2.0, 1.3, 0.88, 0.59 | 1.50 | YES | |
| B7 | 3.98 | 0.014 | 29-Aug-03 | 0.605 | 7.45% | 2 | 4 | 0.945 | 10, 6.7, 4.4, 3.0, 2.0, 1.3, 0.88, 0.59 | 1.50 | YES | |
| B8 | 6.56 | 0.023 | 13-Sep-03 | 0.512 | 9.47% | 1 | 4 | 0.8297 | 10, 6.7, 4.4, 3.0, 2.0, 1.3, 0.88, 0.59 | 1.50 | NO | IC50 out of range |

## NHK NRU Positive Control (SLS) Data

| Experiment ID[1] NHK Cells | $IC_{50}$ (ug/mL) | $IC_{50}$ (mM) | Reference Substance Application Date | Mean VC OD[2] | Difference of right/left VC from mean VC[3] | Number of Points 0 - 50 %[4] | Number of Points 50 - 100 %[5] | $R^2$ [6] | Exposure Concentrations (ug/mL)[7] | Dilution Factor[8] | Acceptable Tests[9] | Rationale for Unacceptability |
|---|---|---|---|---|---|---|---|---|---|---|---|---|
| B9 | 5.85 | 0.020 | 14-Sep-03 | 0.551 | 4.08% | 2 | 3 | 0.9042 | 10, 6.7, 4.4, 3.0, 2.0, 1.3, 0.88, 0.59 | 1.50 | NO | IC50 out of range |
| B10 | 5.25 | 0.018 | 15-Sep-03 | 0.475 | 1.75% | 2 | 3 | 0.8811 | 10, 6.7, 4.4, 3.0, 2.0, 1.3, 0.88, 0.59 | 1.50 | NO | IC50 out of range |
| B11 | 6.15 | 0.021 | 16-Sep-03 | 0.38 | 1.21% | 1 | 3 | 0.7715 | 10, 6.7, 4.4, 3.0, 2.0, 1.3, 0.88, 0.59 | 1.50 | NO | IC50 out of range; low r2 |
| B12 | 4.27 | 0.015 | 29-Sep-03 | 0.642 | 4.75% | 2 | 5 | 0.924 | 10, 6.7, 4.4, 3.0, 2.0, 1.3, 0.88, 0.59 | 1.50 | YES | |
| B13 | 4.27 | 0.015 | 29-Sep-03 | 0.242 | 1.41% | 2 | 4 | 0.928 | 10, 6.7, 4.4, 3.0, 2.0, 1.3, 0.88, 0.59 | 1.50 | YES | |
| B14 | 3.98 | 0.014 | 30-Sep-03 | 0.317 | 1.85% | 2 | 5 | 0.9696 | 10, 6.7, 4.4, 3.0, 2.0, 1.3, 0.88, 0.59 | 1.50 | YES | |
| B15 | 6.36 | 0.022 | 1-Oct-03 | 0.294 | 0.97% | 2 | 2 | 0.8797 | 10, 6.7, 4.4, 3.0, 2.0, 1.3, 0.88, 0.59 | 1.50 | NO | IC50 out of range |
| **Phase III** | | | | | | | | | | | | |
| A1 | 2.88 | 0.010 | 15-Mar-04 | 0.474 | 1.95% | 3 | 5 | 0.9576 | 10.0, 6.67, 4.44, 2.96, 1.98, 1.32, 0.88, 0.59 | 1.50 | YES | |
| A2 | 3.42 | 0.012 | 18-Mar-04 | 0.581 | 5.05% | 2 | 6 | 0.9176 | 10.0, 6.67, 4.44, 2.96, 1.98, 1.32, 0.88, 0.59 | 1.50 | YES | |
| A3 | 3.90 | 0.014 | 29-Mar-04 | 0.610 | 0.07% | 3 | 5 | 0.8815 | 10.0, 6.67, 4.44, 2.96, 1.98, 1.32, 0.88, 0.59 | 1.50 | YES | |
| A4 | 2.67 | 0.009 | 29-Mar-04 | 0.509 | 3.50% | 3 | 5 | 0.9629 | 10.0, 6.67, 4.44, 2.96, 1.98, 1.32, 0.88, 0.59 | 1.50 | YES | |
| A5 | 2.65 | 0.009 | 30-Mar-04 | 0.533 | 5.08% | 3 | 5 | 0.9534 | 10.0, 6.67, 4.44, 2.96, 1.98, 1.32, 0.88, 0.59 | 1.50 | YES | |
| B1 | 2.84 | 0.010 | 21-Apr-04 | 0.621 | 3.08% | 4 | 4 | 0.9377 | 10.0, 6.67, 4.44, 2.96, 1.98, 1.32, 0.88, 0.59 | 1.50 | YES | |
| B2 | 3.38 | 0.012 | 22-Apr-04 | 0.526 | 2.69% | 3 | 5 | 0.9568 | 10.0, 6.67, 4.44, 2.96, 1.98, 1.32, 0.88, 0.59 | 1.50 | YES | |
| B3 | 2.79 | 0.010 | 4-May-04 | 0.531 | 6.18% | 3 | 5 | 0.9469 | 10.0, 6.67, 4.44, 2.96, 1.98, 1.32, 0.88, 0.59 | 1.50 | YES | |
| B4 | 4.20 | 0.015 | 11-May-04 | 0.528 | 11.31% | 2 | 6 | 0.8904 | 10.0, 6.67, 4.44, 2.96, 1.98, 1.32, 0.88, 0.59 | 1.50 | YES | |
| B5 | 3.51 | 0.012 | 12-May-04 | 0.537 | 7.15% | 2 | 6 | 0.9149 | 10.0, 6.67, 4.44, 2.96, 1.98, 1.32, 0.88, 0.59 | 1.50 | YES | |

## NHK NRU Positive Control (SLS) Data

| Experiment ID[1] NHK Cells | $IC_{50}$ (ug/mL) | $IC_{50}$ (mM) | Reference Substance Application Date | Mean VC OD[2] | Difference of right/left VC from mean VC[3] | Number of Points 0 - 50 %[4] | Number of Points 50 - 100 %[5] | $R^2$ [6] | Exposure Concentrations (ug/mL)[7] | Dilution Factor[8] | Acceptable Tests[9] | Rationale for Unacceptability |
|---|---|---|---|---|---|---|---|---|---|---|---|---|
| B6 | 2.72 | 0.009 | 14-Jul-04 | 0.629 | 6.79% | 3 | 5 | 0.9380 | 10.0, 6.67, 4.44, 2.96, 1.98, 1.32, 0.88, 0.59 | 1.50 | YES | |
| B7 | 2.58 | 0.009 | 15-Jul-04 | 0.611 | 0.67% | 3 | 5 | 0.9646 | 10.0, 6.67, 4.44, 2.96, 1.98, 1.32, 0.88, 0.59 | 1.50 | YES | |
| B8 | 2.95 | 0.010 | 17-Aug-04 | 0.587 | 10.35% | 3 | 4 | 0.9304 | 10.0, 6.67, 4.44, 2.96, 1.98, 1.32, 0.88, 0.59 | 1.50 | YES | |
| B9 | 3.08 | 0.011 | 18-Aug-04 | 0.554 | 1.95% | 3 | 4 | 0.9609 | 10.0, 6.67, 4.44, 2.96, 1.98, 1.32, 0.88, 0.59 | 1.50 | YES | |
| B10 | 4.14 | 0.014 | 1-Sep-04 | 0.597 | 6.80% | 2 | 6 | 0.9448 | 10.0, 6.67, 4.44, 2.96, 1.98, 1.32, 0.88, 0.59 | 1.50 | YES | |
| B11 | 3.55 | 0.012 | 2-Sep-04 | 0.669 | 1.77% | 2 | 6 | 0.9438 | 10.0, 6.67, 4.44, 2.96, 1.98, 1.32, 0.88, 0.59 | 1.50 | YES | |
| B12 | 2.93 | 0.010 | 20-Oct-04 | 0.599 | 3.40% | 3 | 5 | 0.9561 | 10.0, 6.67, 4.44, 2.96, 1.98, 1.32, 0.88, 0.59 | 1.50 | YES | |
| B13 | 2.50 | 0.009 | 27-Oct-04 | 0.629 | 3.01% | 3 | 5 | 0.9645 | 10.0, 6.67, 4.44, 2.96, 1.98, 1.32, 0.88, 0.59 | 1.50 | YES | |
| B14 | 3.10 | 0.011 | 28-Oct-04 | 0.702 | 3.78% | 3 | 5 | 0.9615 | 10.0, 6.67, 4.44, 2.96, 1.98, 1.32, 0.88, 0.59 | 1.50 | YES | |
| B15 | 2.51 | 0.009 | 8-Nov-04 | 0.623 | 2.50% | 4 | 4 | 0.9151 | 10.0, 6.67, 4.44, 2.96, 1.98, 1.32, 0.88, 0.59 | 1.50 | YES | |

Abbreviations: NR=Neutral red; R&D=Research and development; PC=Positive control; C1 - C8=Concentration series applied to the the cells. C1 is the highest concentration and C8 is lowest; NA=Not Available; RC=Registry of Cytotoxicity;
[1] PC test ID
[2] Mean OD value for all VC wells in test plate
[3] Difference of right and left VC column of wells in the test plate
[4] % Viability values between 0 and 50% viability; test acceptance criterion; Phases Ia and Ib = number of points between 10 - 50%
[5] % Viability values between 50 and 100% viability; test acceptance criterion; Phases Ia and Ib = number of points between 50 - 90%
[6] Calculated value from the Prism® software
[7] Reference substance concentrations applied to the cells
[8] Step-wise dilution factor
[9] Determination whether test meets or doesn't meet test acceptance criteria
Shaded boxes identify values that do not meet the specific test acceptance criteria

**Acceptance Limits for PC $IC_{50}$**

| Phase | ECBC (ug/mL) | FAL (ug/mL) | IIVS (ug/mL) |
|---|---|---|---|
| Ib (NHK) | 1.40 – 6.67 | 1.34 – 13.6 | 2.57 – 4.79 |
| II (NHK) | 1.22 – 6.10 | 0 – 11.1 | 2.10 – 5.04 |
| III (NHK) | 0.07 – 7.11 | 0.57 – 5.82 | 1.94 – 5.61 |

# Appendix J

## $LD_{50}$ and Toxicity Category Predictions

**J1 3T3 NRU Predictions: RC Millimole Regression ..... J-5**

**J2 NHK NRU Predictions: RC Millimole Regression ..... J-11**

**J3 3T3 NRU Predictions: RC Rat-Only Millimole Regression ..... J-17**

**J4 NHK NRU Predictions: RC Rat-Only Millimole Regression ... J-21**

**J5 3T3 NRU Predictions: RC Rat-Only Weight Regression..... J-25**

**J6 NHK NRU Predictions: RC Rat-Only Weight Regression ..... J-29**

**J7 Comparison of Millimole Regression with Weight Regression Regarding Prediction of Toxicity ($LD_{50}$) for Low or High Molecular Weight Chemicals..... J-34**

***[This Page Intentionally Left Blank]***

# Appendix J

The data presented in this appendix support the analyses in **Section 6**. For the analysis in **Appendices J1** through **J6,** the $IC_{50}$ values for each reference substance are the geometric mean of the geometric mean $IC_{50}$ values obtained for each laboratory. $IC_{50}$ data for the same reference substances were used with each regression/test method evaluated. Sixty-seven chemicals were evaluated for the 3T3 NRU test method and 68 chemicals were evaluated for the NHK NRU test method. Of the original 72 chemicals tested, epinephrine bitartrate, colchicine, and propylparaben were excluded due to the lack of rat oral reference $LD_{50}$ data. Carbon tetrachloride and methanol were excluded from the 3T3 NRU evaluations because no laboratory attained sufficient toxicity in any experiment for the calculation of an $IC_{50}$. Carbon tetrachloride was also excluded from the NHK NRU evaluations because no laboratory attained sufficient toxicity in any test for the calculation of an $IC_{50}$.

**<u>RC Millimole Regression: Appendices J1 (3T3 NRU) and J2 (NHK NRU)</u>**

$$\text{Log } LD_{50} \text{ (mmol/kg)} = 0.435 \log IC_{50} \text{ (mM)} + 0.625$$

**Appendices J1** and **J2** support the analysis of outlier substances presented in **Section 6.2**. Predicted $LD_{50}$ values in mmol/kg and mg/kg (conversion from the mmol/kg values) for each reference substance were determined for each test method using the respective $IC_{50}$ values in the RC millimole regression. Epinephrine bitartrate, colchicine, and propylparaben were included in this analysis for a more complete comparison with the results of the RC. The predicted log $LD_{50}$ value was subtracted from the observed log $LD_{50}$ value (initial values in **Table 3-2** from the RC, HSDB, or RTECS® were converted to mmol/kg) and the difference (positive or negative) was compared to the RC criterion for outliers (0.699). Reference substances with absolute values greater than 0.699 were identified as positive or negative outliers to the RC millimole regression. The observed $LD_{50}$ value (mg/kg) was used to assign each reference chemical to an observed toxicity category (GHS acute oral classification [UN 2005]). The predicted $LD_{50}$ value (mg/kg) was used to determine the reference substance's predicted toxicity category.

**RC Rat-Only Millimole Regression: Appendices J3 (3T3 NRU) and J4 (NHK NRU)**

*Log $LD_{50}$ (mmol/kg) = 0.439 log $IC_{50}$ (mM) + 0.621*

**Appendices J3** and **J4** support the accuracy analyses for GHS acute oral toxicity category predictions presented in **Section 6.4.2**. As described in **Section 6.3.1**, the RC rat-only millimole regression was calculated using the RC $IC_{50}$ and $LD_{50}$ values for the 282 chemicals that had rat oral $LD_{50}$ values. The observed $LD_{50}$ values, which were the reference $LD_{50}$ values (mg/kg) from **Table 4-2**, were used to assign each reference substance to an observed toxicity category (GHS acute oral classification [UN 2005]). The predicted $LD_{50}$ value (mg/kg) was used to determine the reference substance's predicted toxicity category.

**RC Rat-Only Weight Regression: Appendices J5 (3T3 NRU) and J6 (NHK NRU)**

*Log $LD_{50}$ (mg/kg) = 0.372 log $IC_{50}$ (μg/mL) + 2.024*

**Appendices J5** and **J6** support the accuracy analyses for GHS acute oral toxicity category predictions presented in **Section 6.4.2**. As described in **Section 6.3.2**, the RC rat-only weight regression was calculated using the RC $IC_{50}$ and $LD_{50}$ data for the 282 chemicals that had rat oral $LD_{50}$ values. The regression data were converted into weight units (i.e., $LD_{50}$ values as mg/kg and $IC_{50}$ values as μg/mL). The observed $LD_{50}$ values, which were the reference $LD_{50}$ values (mg/kg) from **Table 4-2**, were used to assign each reference substance to an observed toxicity category (GHS acute oral classification [UN 2005]). Predicted $LD_{50}$ values in mg/kg for each reference substance were determined for each NRU test method using the respective NRU $IC_{50}$ values in the RC rat-only weight regression. The predicted $LD_{50}$ value (mg/kg) was used to determine the reference substance's predicted toxicity category.

**Comparison of RC Rat-Only Millimole Regression and the RC Rat-Only Weight Regression for the Prediction of $LD_{50}$ for Low or High Molecular Weight Substances**

**Appendix J7** supports **Section 6.6.2**, which compares the under- and over-prediction of acute oral toxicity (i.e., using $LD_{50}$ values) for low and high molecular weight substances for the RC rat-only millimole regression and the RC rat-only weight regression. The analysis uses the RC $IC_{50}$ and $LD_{50}$ values for the 282 RC substances with rat oral $LD_{50}$ data, which are provided in **Appendix K-3**.

# Appendix J1

## 3T3 NRU Predictions: RC Millimole Regression

***[This Page Intentionally Left Blank]***

## 3T3 NRU Predictions: RC Millimole Regression

### RC Millimole Regression: Log $LD_{50}$ (mmol/kg) = 0.435 log $IC_{50}$ (mM) + 0.625

| Reference Substance[1] | Log Observed $LD_{50}$ (mmol/kg) | Observed $LD_{50}$ (mg/kg) | Observed $LD_{50}$ Toxicity Category[2] (mg/kg) | Log Predicted $LD_{50}$ (mmol/kg)[3] | Predicted $LD_{50}$ (mg/kg)[4] | Predicted $LD_{50}$ Toxicity Category[2] (mg/kg) | 3T3 Log $IC_{50}$ (mM)[5] | 3T3 $IC_{50}$ (ug/mL)[5] | Log Observed $LD_{50}$ - Log Predicted $LD_{50}$ (mmol/kg)[6] | Outlier[7] |
|---|---|---|---|---|---|---|---|---|---|---|
| 1,1,1-Trichloroethane | 1.888 | 10298 | > 5000 | 1.576 | 5022 | > 5000 | 2.186 | 20453 | 0.312 | |
| 2-Propanol | 1.988 | 5843 | > 5000 | 1.392 | 1483 | 300-2000 | 1.764 | 3489 | 0.595 | |
| 5-Aminosalicylic Acid | 1.704 | 7749 | > 5000 | 1.076 | 1824 | 300-2000 | 1.037 | 1667 | 0.628 | |
| Acetaminophen | 1.201 | 2404 | 2000-5000 | 0.407 | 385.9 | 300-2000 | -0.501 | 47.7 | 0.795 | Positive |
| Acetonitrile | 1.966 | 3798 | 2000-5000 | 1.620 | 1711 | 300-2000 | 2.287 | 7951 | 0.346 | |
| Acetylsalicylic Acid | 0.744 | 1000 | 300-2000 | 0.875 | 1351 | 300-2000 | 0.574 | 676 | -0.131 | |
| Aminopterin | -2.167 | 3 | < 5 | -1.480 | 15 | 5-50 | -4.839 | 0.006 | -0.687 | |
| Amitriptyline HCl | 0.061 | 361 | 300-2000 | -0.092 | 254 | 50-300 | -1.648 | 7.05 | 0.153 | |
| Arsenictrioxide | -1.000 | 20 | 5-50 | -0.236 | 115 | 50-300 | -1.980 | 2.07 | -0.764 | Negative |
| Atropine Sulfate | -0.036 | 639 | 300-2000 | 0.207 | 1119 | 300-2000 | -0.961 | 76.0 | -0.243 | |
| Boric Acid | 1.634 | 2660 | 2000-5000 | 1.267 | 1143.6 | 300-2000 | 1.476 | 1850 | 0.367 | |
| Busulfan | -2.090 | 2 | < 5 | 0.407 | 629 | 300-2000 | -0.501 | 77.7 | -2.497 | Negative |
| Cadmium chloride | -0.319 | 88 | 50-300 | -0.484 | 60 | 50-300 | -2.549 | 0.518 | 0.165 | |
| Caffeine | -0.005 | 192 | 50-300 | 0.579 | 737 | 300-2000 | -0.105 | 153 | -0.584 | |
| Carbamazepine | 0.918 | 1957 | 300-2000 | 0.468 | 695 | 300-2000 | -0.360 | 103 | 0.450 | |
| Chloral Hydrate | 0.462 | 479 | 300-2000 | 0.644 | 729 | 300-2000 | 0.044 | 183 | -0.182 | |
| Chloramphenicol | 1.021 | 3393 | 2000-5000 | 0.453 | 918 | 300-2000 | -0.395 | 130 | 0.568 | |
| Citric Acid | 1.194 | 3000 | 2000-5000 | 0.886 | 1477.5 | 300-2000 | 0.600 | 765 | 0.308 | |
| Colchicine | -1.82 | 6 | 5-50 | -1.144 | 28.7 | 5-50 | -4.066 | 0.034 | -0.680 | |
| Cupric Sulfate Pentahydrate | 0.080 | 300 | 50-300 | 0.268 | 462 | 300-2000 | -0.822 | 37.6 | -0.188 | |
| Cycloheximide | -2.148 | 2 | < 5 | -0.757 | 49.3 | 5-50 | -3.177 | 0.187 | -1.391 | Negative |
| Dibutyl Phthalate | 1.635 | 11998 | > 5000 | 0.274 | 523 | 300-2000 | -0.807 | 43.4 | 1.361 | Positive |
| Dichlorvos (DDVP) | -1.114 | 17 | 5-50 | 0.149 | 311 | 300-2000 | -1.095 | 17.7 | -1.262 | Negative |
| Diethyl Phthalate | 1.588 | 8602 | > 5000 | 0.487 | 683 | 300-2000 | -0.316 | 107 | 1.100 | Positive |
| Digoxin | -1.637 | 18 | 5-50 | 0.519 | 2580 | 2000-5000 | -0.244 | 445 | -2.156 | Negative |
| Dimethylformamide | 1.583 | 2800 | 2000-5000 | 1.432 | 1974 | 300-2000 | 1.854 | 5224 | 0.152 | |
| Diquat Dibromide Monohydra | -0.173 | 243 | 50-300 | -0.094 | 291 | 50-300 | -1.654 | 8.04 | -0.079 | |
| Disulfoton | -2.137 | 2 | < 5 | 0.696 | 1363 | 300-2000 | 0.163 | 400 | -2.833 | Negative |
| Endosulfan | -1.354 | 18 | 5-50 | -0.175 | 272 | 50-300 | -1.840 | 5.88 | -1.179 | Negative |

## 3T3 NRU Predictions: RC Millimole Regression

| Reference Substance[1] | Log Observed $LD_{50}$ (mmol/kg) | Observed $LD_{50}$ (mg/kg) | Observed $LD_{50}$ Toxicity Category[2] (mg/kg) | Log Predicted $LD_{50}$ (mmol/kg)[3] | Predicted $LD_{50}$ (mg/kg)[4] | Predicted $LD_{50}$ Toxicity Category[2] (mg/kg) | 3T3 Log $IC_{50}$ (mM)[5] | 3T3 $IC_{50}$ (ug/mL)[5] | Log Observed $LD_{50}$ - Log Predicted $LD_{50}$ (mmol/kg)[6] | Outlier[7] |
|---|---|---|---|---|---|---|---|---|---|---|
| Epinephrine bitartrate | -1.92 | 4 | < 5 | 0.298 | 662 | 300-2000 | -0.752 | 59.0 | -2.219 | Negative |
| Ethanol | 2.483 | 14008 | > 5000 | 1.561 | 1675 | 300-2000 | 2.151 | 6523 | 0.922 | Positive |
| Ethyleneglycol | 2.140 | 8567 | > 5000 | 1.754 | 3522 | 2000-5000 | 2.595 | 24436 | 0.386 | |
| Fenpropathrin | -1.288 | 18 | 5-50 | 0.114 | 454 | 300-2000 | -1.175 | 23.3 | -1.402 | Negative |
| Gibberellic Acid | 1.260 | 6305 | > 5000 | 1.214 | 5664 | > 5000 | 1.353 | 7810 | 0.047 | |
| Glutethimide | 0.441 | 600 | 300-2000 | 0.590 | 846 | 300-2000 | -0.079 | 181 | -0.149 | |
| Glycerol | 2.139 | 12691 | > 5000 | 1.679 | 4394 | 2000-5000 | 2.422 | 24345 | 0.461 | |
| Haloperidol | -0.468 | 128 | 50-300 | -0.153 | 264 | 50-300 | -1.788 | 6.13 | -0.315 | |
| Hexachlorophene | -0.824 | 61 | 50-300 | -0.239 | 235 | 50-300 | -1.987 | 4.19 | -0.585 | |
| Lactic Acid | 1.617 | 3730 | 2000-5000 | 1.290 | 1757 | 300-2000 | 1.529 | 3044 | 0.327 | |
| Lindane | -0.585 | 76 | 50-300 | 0.444 | 808 | 300-2000 | -0.416 | 112 | -1.029 | Negative |
| Lithium carbonate | 1.206 | 1187 | 300-2000 | 1.008 | 753 | 300-2000 | 0.881 | 562 | 0.198 | |
| Meprobamate | 0.561 | 794 | 300-2000 | 0.778 | 1309 | 300-2000 | 0.351 | 490 | -0.217 | |
| Mercury Chloride | -2.434 | 1 | < 5 | -0.166 | 185 | 50-300 | -1.819 | 4.12 | -2.268 | Negative |
| Nicotine | -0.511 | 50 | 5-50 | 0.776 | 969 | 300-2000 | 0.347 | 361 | -1.287 | Negative |
| Paraquat | -0.509 | 80 | 50-300 | 0.144 | 358.14 | 300-2000 | -1.106 | 20.1 | -0.652 | |
| Parathion | -2.161 | 2 | < 5 | 0.237 | 503 | 300-2000 | -0.891 | 37.4 | -2.398 | Negative |
| Phenobarbital | -0.154 | 163 | 50-300 | 0.800 | 1465 | 300-2000 | 0.402 | 586 | -0.954 | Negative |
| Phenol | 0.643 | 414 | 300-2000 | 0.559 | 341 | 300-2000 | -0.152 | 66.3 | 0.085 | |
| Phenylthiourea | -1.705 | 3 | < 5 | 0.501 | 482 | 300-2000 | -0.285 | 79.0 | -2.206 | Negative |
| Physostigmine | -1.787 | 5 | < 5 | 0.183 | 420 | 300-2000 | -1.015 | 26.6 | -1.970 | Negative |
| Potassium cyanide | -0.824 | 10 | 5-50 | 0.506 | 209 | 50-300 | -0.274 | 34.6 | -1.330 | Negative |
| Potassium chloride | 1.543 | 2602 | 2000-5000 | 1.355 | 1689 | 300-2000 | 1.678 | 3555 | 0.188 | |
| Procainamide HCl | 0.856 | 1950 | 300-2000 | 0.716 | 1414 | 300-2000 | 0.210 | 441 | 0.140 | |
| Propranolol | 0.201 | 470 | 300-2000 | 0.050 | 332 | 300-2000 | -1.321 | 14.1 | 0.151 | |
| Propylparaben | 1.550 | 6326 | > 5000 | 0.260 | 328 | 300-2000 | -0.840 | 26.1 | 1.290 | Positive |
| Sodium Arsenite | -0.501 | 41 | 5-50 | -0.347 | 58 | 50-300 | -2.234 | 0.759 | -0.154 | |
| Sodium Chloride | 1.710 | 2998 | 2000-5000 | 1.456 | 1669 | 300-2000 | 1.910 | 4746 | 0.254 | |
| Sodium Dichromate Dihydrat | -0.719 | 57 | 50-300 | -0.552 | 84 | 50-300 | -2.706 | 0.587 | -0.167 | |
| Sodium Hypochlorite | 2.078 | 8910 | > 5000 | 1.123 | 989 | 300-2000 | 1.145 | 1040 | 0.955 | Positive |

## 3T3 NRU Predictions: RC Millimole Regression

| Reference Substance[1] | Log Observed $LD_{50}$ (mmol/kg) | Observed $LD_{50}$ (mg/kg) | Observed $LD_{50}$ Toxicity Category[2] (mg/kg) | Log Predicted $LD_{50}$ (mmol/kg)[3] | Predicted $LD_{50}$ (mg/kg)[4] | Predicted $LD_{50}$ Toxicity Category[2] (mg/kg) | 3T3 Log $IC_{50}$ (mM)[5] | 3T3 $IC_{50}$ (ug/mL)[5] | Log Observed $LD_{50}$ - Log Predicted $LD_{50}$ (mmol/kg)[6] | Outlier[7] |
|---|---|---|---|---|---|---|---|---|---|---|
| Sodium Oxalate | 0.063 | 155 | 50-300 | 0.383 | 323.4 | 300-2000 | -0.557 | 37.142 | -0.319 | |
| Sodium fluoride | 0.632 | 180 | 50-300 | 0.742 | 232 | 50-300 | 0.269 | 78.0 | -0.110 | |
| Sodium selenate | -2.072 | 2 | < 5 | 0.271 | 352.7 | 300-2000 | -0.814 | 29.023 | -2.343 | Negative |
| Strychnine | -2.144 | 2 | < 5 | 0.483 | 1017 | 300-2000 | -0.326 | 158 | -2.627 | Negative |
| Thallium Sulfate | -1.241 | 29 | 5-50 | -0.231 | 296 | 50-300 | -1.968 | 5.43 | -1.009 | Negative |
| Trichloroacetic Acid | 1.486 | 4999 | 2000-5000 | 0.948 | 1449 | 300-2000 | 0.742 | 902 | 0.538 | |
| Triethylenemelamine | -2.310 | 1 | < 5 | -0.626 | 48 | 5-50 | -2.875 | 0.272 | -1.684 | Negative |
| Triphenyltin Hydroxide | -0.921 | 44 | 5-50 | -1.258 | 20 | 5-50 | -4.329 | 0.017 | 0.337 | |
| Valproic Acid | 1.009 | 1471 | 300-2000 | 0.955 | 1299 | 300-2000 | 0.758 | 826 | 0.054 | |
| Verapamil HCl | -0.658 | 108 | 50-300 | 0.126 | 656 | 300-2000 | -1.148 | 34.9 | -0.783 | Negative |
| Xylene | 1.607 | 4300 | 2000-5000 | 0.987 | 1030 | 300-2000 | 0.832 | 721 | 0.621 | |

Abbreviations: 3T3=Neutral red uptake with mouse fibroblast 3T3 cell line

[1]Carbon tetrachloride and methanol were excluded because $IC_{50}$ values could not be determined. Initial $LD_{50}$ from **Table 3-2** converted to mmol/kg. Initial $LD_{50}$ values came largely from the RC (1983/84 RTECS®) for RC susbtances and from the current Hazardous Substances Data Bank (HSDB) or RTECS® and electronic database searches for non-RC substances.

[2]Globally Harmonized System (GHS) hazard classification (UN 2005):

| Abbreviation | Category | Oral $LD_{50}$ Limits |
|---|---|---|
| <5 | 1 | $LD_{50} \leq 5$ mg/kg |
| 5-50 | 2 | $5 < LD_{50} \leq 50$ mg/kg |
| 50-300 | 3 | $50 < LD_{50} \leq 300$ mg/kg |
| 300-2000 | 4 | $300 < LD_{50} \leq 2000$ mg/kg |
| 2000-5000 | 5 | $2000 < LD_{50} \leq 5000$ mg/kg |
| >5000 | Unclassified | $LD_{50} > 5000$ mg/kg |

[3]$LD_{50}$ determined using NRU $IC_{50}$ in RC millimole regression: Log $LD_{50}$ (mmol/kg) = 0.435 log $IC_{50}$ (mM) + 0.625

[4]Predicted $LD_{50}$ in mg/kg (converted from results of RC millimole regression)

[5]Combined 3T3 $IC_{50}$ values from three laboratories

[6]Calculation to determine outliers to the RC millimole regression line

[7]Log observed $LD_{50}$ - log predicted $LD_{50}$ > 0.699 (or log 5) identifies a chemical as an "outlier"; negative=predicted value below prediction interval of RC millimole regression line; positive=predicted value above prediction interval of RC millimole regression line (Halle 1998, 2003)

***[This Page Intentionally Left Blank]***

# Appendix J2

## NHK NRU Predictions: RC Millimole Regression

***[This Page Intentionally Left Blank]***

## NHK NRU Predictions: RC Millimole Regression

### RC Millimole Regression: Log $LD_{50}$ (mmol/kg) = 0.435 log $IC_{50}$ (mM) + 0.625

| Reference Substance[1] | Log Observed $LD_{50}$ (mmol/kg)[2] | Observed $LD_{50}$ (mg/kg)[3] | Observed $LD_{50}$ Toxicity Category[4] (mg/kg) | Log Predicted $LD_{50}$ (mmol/kg)[5] | Predicted $LD_{50}$ (mg/kg)[6] | Predicted $LD_{50}$ Toxicity Category[4] (mg/kg) | NHK Log $IC_{50}$ (mM)[7] | NHK $IC_{50}$ (ug/mL)[8] | Log Observed $LD_{50}$ - Log Predicted $LD_{50}$ (mmol/kg)[9] | Outlier[10] |
|---|---|---|---|---|---|---|---|---|---|---|
| 1,1,1-Trichloroethane | 1.888 | 10298 | > 5000 | 1.401 | 3361 | 2000-5000 | 1.784 | 4709 | 0.486 | |
| 2-Propanol | 1.988 | 5843 | > 5000 | 1.473 | 1788 | 300-2000 | 1.951 | 2635 | 0.514 | |
| 5-Aminosalicylic Acid | 1.704 | 7749 | > 5000 | 0.401 | 385 | 300-2000 | -0.516 | 154 | 1.304 | Positive |
| Acetaminophen | 1.201 | 2404 | 2000-5000 | 0.858 | 1089 | 300-2000 | 0.535 | 934 | 0.344 | |
| Acetonitrile | 1.966 | 3798 | 2000-5000 | 1.654 | 1853 | 300-2000 | 2.367 | 3065 | 0.312 | |
| Acetylsalicylic Acid | 0.744 | 1000 | 300-2000 | 0.854 | 1287 | 300-2000 | 0.526 | 1099 | -0.110 | |
| Aminopterin | -2.167 | 3 | < 5 | 0.702 | 2218 | 2000-5000 | 0.177 | 1557 | -2.869 | Negative |
| Amitriptyline HCl | 0.061 | 361 | 300-2000 | -0.047 | 282 | 50-300 | -1.545 | -13 | 0.107 | |
| Arsenictrioxide | -1.000 | 20 | 5-50 | -0.011 | 193 | 50-300 | -1.461 | -2 | -0.989 | Negative |
| Atropine Sulfate | -0.036 | 639 | 300-2000 | 0.221 | 1155 | 300-2000 | -0.929 | 255 | -0.257 | |
| Boric Acid | 1.634 | 2660 | 2000-5000 | 0.988 | 601 | 300-2000 | 0.833 | 593 | 0.646 | |
| Busulfan | -2.090 | 2 | < 5 | 0.635 | 1064 | 300-2000 | 0.024 | 676 | -2.726 | Negative |
| Cadmium chloride | -0.319 | 88 | 50-300 | -0.249 | 103 | 50-300 | -2.009 | -26 | -0.070 | |
| Caffeine | -0.005 | 192 | 50-300 | 0.850 | 1374 | 300-2000 | 0.516 | 1167 | -0.855 | Negative |
| Carbamazepine | 0.918 | 1957 | 300-2000 | 0.428 | 633 | 300-2000 | -0.453 | 271 | 0.490 | |
| Chloral Hydrate | 0.462 | 479 | 300-2000 | 0.584 | 635 | 300-2000 | -0.094 | 371 | -0.122 | |
| Chloramphenicol | 1.021 | 3393 | 2000-5000 | 0.637 | 1402 | 300-2000 | 0.028 | 894 | 0.384 | |
| Citric Acid | 1.194 | 3000 | 2000-5000 | 0.769 | 1128 | 300-2000 | 0.331 | 867 | 0.425 | |
| Colchicine | -1.82 | 6.00 | 5-50 | -1.45 | 14.0 | 5-50 | -4.780 | 0 | -0.373 | |
| Cupric Sulfate Pentahydrate | 0.080 | 300 | 50-300 | 0.580 | 949 | 300-2000 | -0.104 | 550 | -0.500 | |
| Cycloheximide | -2.148 | 2 | < 5 | -0.934 | 33 | 5-50 | -3.584 | -31 | -1.214 | Negative |
| Dibutyl Phthalate | 1.635 | 11998 | > 5000 | 0.196 | 437 | 300-2000 | -0.987 | 85 | 1.439 | Positive |
| Dichlorvos (DDVP) | -1.114 | 17 | 5-50 | 0.053 | 250 | 50-300 | -1.315 | 13 | -1.167 | Negative |
| Diethyl Phthalate | 1.588 | 8602 | > 5000 | 0.509 | 718 | 300-2000 | -0.266 | 366 | 1.079 | Positive |
| Digoxin | -1.637 | 18 | 5-50 | -1.937 | 9 | 5-50 | -5.889 | -17 | 0.299 | |
| Dimethylformamide | 1.583 | 2800 | 2000-5000 | 1.506 | 2345 | 2000-5000 | 2.026 | 3533 | 0.077 | |
| Diquat Dibromide Monohydr | -0.173 | 243 | 50-300 | -0.211 | 223 | 50-300 | -1.922 | -47 | 0.038 | |
| Disulfoton | -2.137 | 2 | < 5 | 0.622 | 1149 | 300-2000 | -0.007 | 714 | -2.759 | Negative |
| Endosulfan | -1.354 | 18 | 5-50 | -0.368 | 175 | 50-300 | -2.282 | -64 | -0.987 | |
| Epinephrine bitartrate | -1.92 | 4 | < 5 | 0.372 | 785 | 300-2000 | -0.581 | 87 | -2.293 | Negative |

## NHK NRU Predictions: RC Millimole Regression

| Reference Substance[1] | Log Observed $LD_{50}$ (mmol/kg)[2] | Observed $LD_{50}$ (mg/kg)[3] | Observed $LD_{50}$ Toxicity Category[4] (mg/kg) | Log Predicted $LD_{50}$ (mmol/kg)[5] | Predicted $LD_{50}$ (mg/kg)[6] | Predicted $LD_{50}$ Toxicity Category[4] (mg/kg) | NHK Log $IC_{50}$ (mM)[7] | NHK $IC_{50}$ (ug/mL)[8] | Log Observed $LD_{50}$ - Log Predicted $LD_{50}$ (mmol/kg)[9] | Outlier[10] |
|---|---|---|---|---|---|---|---|---|---|---|
| Ethanol | 2.483 | 14008 | > 5000 | 1.642 | 2019 | 2000-5000 | 2.337 | 3315 | 0.841 | Positive |
| Ethyleneglycol | 2.140 | 8567 | > 5000 | 1.857 | 4462 | 2000-5000 | 2.831 | 8285 | 0.283 | |
| Fenpropathrin | -1.288 | 18 | 5-50 | -0.314 | 170 | 50-300 | -2.158 | -53 | -0.974 | Negative |
| Gibberellic Acid | 1.260 | 6305 | > 5000 | 1.024 | 3657 | 2000-5000 | 0.916 | 3743 | 0.237 | |
| Glutethimide | 0.441 | 600 | 300-2000 | 0.583 | 831 | 300-2000 | -0.098 | 484 | -0.141 | |
| Glycerol | 2.139 | 12691 | > 5000 | 1.682 | 4424 | 2000-5000 | 2.429 | 7440 | 0.458 | |
| Haloperidol | -0.468 | 128 | 50-300 | -0.266 | 204 | 50-300 | -2.049 | -54 | -0.202 | |
| Hexachlorophene | -0.824 | 61 | 50-300 | -1.180 | 27 | 5-50 | -4.149 | -32 | 0.356 | |
| Lactic Acid | 1.617 | 3730 | 2000-5000 | 1.130 | 1215 | 300-2000 | 1.161 | 1373 | 0.487 | |
| Lindane | -0.585 | 76 | 50-300 | 0.107 | 372 | 300-2000 | -1.191 | 40 | -0.692 | |
| Lithium carbonate | 1.206 | 1187 | 300-2000 | 0.974 | 695 | 300-2000 | 0.801 | 677 | 0.232 | |
| Meprobamate | 0.561 | 794 | 300-2000 | 0.718 | 1140 | 300-2000 | 0.213 | 818 | -0.157 | |
| Mercury Chloride | -2.434 | 1 | < 5 | -0.102 | 215 | 50-300 | -1.671 | -22 | -2.332 | Negative |
| Methanol | 2.609 | 13012 | > 5000 | 1.355 | 726 | 300-2000 | 1.679 | 984 | 1.253 | Positive |
| Nicotine | -0.511 | 50 | 5-50 | 0.546 | 570 | 300-2000 | -0.182 | 311 | -1.057 | Negative |
| Paraquat | -0.509 | 80 | 50-300 | 0.355 | 582 | 300-2000 | -0.621 | 207 | -0.864 | Negative |
| Parathion | -2.161 | 2 | < 5 | 0.197 | 459 | 300-2000 | -0.983 | 90 | -2.358 | Negative |
| Phenobarbital | -0.154 | 163 | 50-300 | 0.749 | 1303 | 300-2000 | 0.285 | 976 | -0.903 | Negative |
| Phenol | 0.643 | 414 | 300-2000 | 0.582 | 360 | 300-2000 | -0.098 | 209 | 0.061 | |
| Phenylthiourea | -1.705 | 3 | < 5 | 0.775 | 906 | 300-2000 | 0.344 | 702 | -2.480 | Negative |
| Physostigmine | -1.787 | 5 | < 5 | 0.411 | 709 | 300-2000 | -0.493 | 291 | -2.197 | Negative |
| Potassium Cyanide | -0.824 | 10 | 5-50 | 0.472 | 193 | 50-300 | -0.352 | 91 | -1.296 | Negative |
| Potassium chloride | 1.543 | 2602 | 2000-5000 | 1.268 | 1381 | 300-2000 | 1.477 | 1750 | 0.275 | |
| Procainamide HCl | 0.856 | 1950 | 300-2000 | 0.976 | 2571 | 2000-5000 | 0.807 | 2509 | -0.120 | |
| Propranolol | 0.201 | 470 | 300-2000 | 0.228 | 500 | 300-2000 | -0.912 | 114 | -0.027 | |
| Propylparaben | 1.550 | 6326 | > 5000 | 0.175 | 269 | 50-300 | -1.040 | 16.6 | 1.375 | Positive |
| Sodium Arsenite | -0.501 | 41 | 5-50 | -0.434 | 48 | 5-50 | -2.435 | -21 | -0.066 | |
| Sodium Chloride | 1.710 | 2998 | 2000-5000 | 1.292 | 1145 | 300-2000 | 1.534 | 1480 | 0.418 | |
| Sodium Dichromate Dihydrat | -0.719 | 57 | 50-300 | -0.516 | 91 | 50-300 | -2.622 | -47 | -0.204 | |
| Sodium Hypochlorite | 2.078 | 8910 | > 5000 | 1.193 | 1160 | 300-2000 | 1.305 | 1384 | 0.885 | Positive |
| Sodium Oxalate | 0.063 | 155 | 50-300 | 0.801 | 847 | 300-2000 | 0.404 | 678 | -0.737 | Negative |

## NHK NRU Predictions: RC Millimole Regression

| Reference Substance[1] | Log Observed $LD_{50}$ (mmol/kg)[2] | Observed $LD_{50}$ (mg/kg)[3] | Observed $LD_{50}$ Toxicity Category[4] (mg/kg) | Log Predicted $LD_{50}$ (mmol/kg)[5] | Predicted $LD_{50}$ (mg/kg)[6] | Predicted $LD_{50}$ Toxicity Category[4] (mg/kg) | NHK Log $IC_{50}$ (mM)[7] | NHK $IC_{50}$ (ug/mL)[8] | Log Observed $LD_{50}$ - Log Predicted $LD_{50}$ (mmol/kg)[9] | Outlier[10] |
|---|---|---|---|---|---|---|---|---|---|---|
| Sodium fluoride | 0.632 | 180 | 50-300 | 0.654 | 189 | 50-300 | 0.066 | 124 | -0.021 | |
| Sodium selenate | -2.072 | 2 | < 5 | 0.074 | 224 | 50-300 | -1.267 | 17 | -2.146 | Negative |
| Strychnine | -2.144 | 2 | < 5 | 0.302 | 670 | 300-2000 | -0.743 | 202 | -2.446 | Negative |
| Thallium Sulfate | -1.241 | 29 | 5-50 | -0.907 | 62 | 50-300 | -3.522 | -57 | -0.333 | |
| Trichloroacetic Acid | 1.486 | 4999 | 2000-5000 | 0.800 | 1032 | 300-2000 | 0.403 | 826 | 0.685 | |
| Triethylenemelamine | -2.310 | 1 | < 5 | -0.263 | 111 | 50-300 | -2.042 | -29 | -2.047 | Negative |
| Triphenyltin Hydroxide | -0.921 | 44 | 5-50 | -1.360 | 16 | 5-50 | -4.562 | -22 | 0.438 | |
| Valproic Acid | 1.009 | 1471 | 300-2000 | 0.864 | 1055 | 300-2000 | 0.550 | 912 | 0.144 | |
| Verapamil HCl | -0.658 | 108 | 50-300 | 0.247 | 868 | 300-2000 | -0.869 | 214 | -0.905 | Negative |
| Xylene | 1.607 | 4300 | 2000-5000 | 0.904 | 852 | 300-2000 | 0.642 | 770 | 0.703 | Positive |

Abbreviations: NHK=Neutral red uptake with normal human epidermal keratinocytes.

[1]Carbon tetrachloride and methanol were excluded because $IC_{50}$ values could not be determined. Initial $LD_{50}$ from **Table 3-2** converted to mmol/kg. Initial $LD_{50}$ values came largely from the RC (1983/84 RTECS®) for RC susbtances and from the current Hazardous Substances Data Bank (HSDB) or RTECS® and electronic database searches for non-RC substances.

[2]Globally Harmonized System (GHS) hazard classification (UN 2005):

| Abbreviation | Category | Oral $LD_{50}$ Limits |
|---|---|---|
| <5 | 1 | $LD_{50} \leq 5$ mg/kg |
| 5-50 | 2 | $5 < LD_{50} \leq 50$ mg/kg |
| 50-300 | 3 | $50 < LD_{50} \leq 300$ mg/kg |
| 300-2000 | 4 | $300 < LD_{50} \leq 2000$ mg/kg |
| 2000-5000 | 5 | $2000 < LD_{50} \leq 5000$ mg/kg |
| >5000 | Unclassified | $LD_{50} > 5000$ mg/kg |

[3]$LD_{50}$ determined using NRU $IC_{50}$ in RC millimole regression: Log $LD_{50}$ (mmol/kg) = 0.435 log $IC_{50}$ (mM) + 0.625.

[4]Predicted $LD_{50}$ in mg/kg (converted from results of RC millimole regression).

[5]Combined NHK $IC_{50}$ values from three laboratories.

[6]Calculation to determine outliers to the RC millimole regression line.

[7]Log observed $LD_{50}$ - log predicted $LD_{50}$ > 0.699 (or log 5) identifies a chemical as an "outlier"; negative=predicted value below prediction interval of RC millimole regression line; positive=predicted value above prediction interval of RC millimole regression line (Halle 1998, 2003).

***[This Page Intentionally Left Blank***

# Appendix J3

## 3T3 NRU Predictions: RC Rat-Only Millimole Regression

***[This Page Intentionally Left Blank]***

## 3T3 NRU Predictions: RC Rat-Only Millimole Regression
## Log $LD_{50}$ (mmol/kg) = 0.439 log $IC_{50}$ (mM) + 0.621

| Reference Substance[1] | Log Reference $LD_{50}$ (mmol/kg)[2] | Reference $LD_{50}$ (mg/kg)[2] | Observed Toxicity Category[3] (mg/kg) | Log Predicted $LD_{50}$ (mmol/kg)[4] | Predicted $LD_{50}$ (mg/kg)[5] | Predicted Toxicity Category[3] (mg/kg) | 3T3 Log $IC_{50}$ (mM)[6] |
|---|---|---|---|---|---|---|---|
| 1,1,1-Trichloroethane | 1.957 | 12078 | >5000 | 1.580 | 5078 | >5000 | 2.186 |
| 2-Propanol | 1.929 | 5105 | >5000 | 1.395 | 1494 | 300-2000 | 1.764 |
| 5-Aminosalicylic Acid | 1.350 | 3428 | 2000-5000 | 1.076 | 1825 | 300-2000 | 1.037 |
| Acetaminophen | 1.155 | 2162 | 2000-5000 | 0.401 | 381 | 300-2000 | -0.501 |
| Acetonitrile | 1.942 | 3595 | 2000-5000 | 1.625 | 1731 | 300-2000 | 2.287 |
| Acetylsalicylic Acid | 0.922 | 1506 | 300-2000 | 0.873 | 1346 | 300-2000 | 0.574 |
| Aminopterin | -1.799 | 7 | 5-50 | -1.504 | 14 | 5-50 | -4.839 |
| Amitriptyline HCl | 0.046 | 349 | 300-2000 | -0.103 | 248 | 50-300 | -1.648 |
| Arsenictrioxide | -0.897 | 25 | 5-50 | -0.248 | 112 | 50-300 | -1.980 |
| Atropine Sulfate | 0.071 | 819 | 300-2000 | 0.199 | 1099 | 300-2000 | -0.961 |
| Boric Acid | 1.744 | 3426 | 2000-5000 | 1.269 | 1149 | 300-2000 | 1.476 |
| Busulfan | -1.308 | 12 | 5-50 | 0.401 | 620 | 300-2000 | -0.501 |
| Cadmium chloride | -0.132 | 135 | 50-300 | -0.498 | 58 | 50-300 | -2.549 |
| Caffeine | 0.203 | 310 | 300-2000 | 0.575 | 730 | 300-2000 | -0.105 |
| Carbamazepine | 1.075 | 2807 | 2000-5000 | 0.463 | 686 | 300-2000 | -0.360 |
| Chloral Hydrate | 0.586 | 638 | 300-2000 | 0.640 | 723 | 300-2000 | 0.044 |
| Chloramphenicol | 1.033 | 3490 | 2000-5000 | 0.448 | 906 | 300-2000 | -0.395 |
| Citric Acid | 1.489 | 5929 | >5000 | 0.884 | 1472 | 300-2000 | 0.600 |
| Cupric Sulfate Pentahydrate | 0.279 | 475 | 300-2000 | 0.260 | 455 | 300-2000 | -0.822 |
| Cycloheximide | -2.148 | 2 | <5 | -0.774 | 47 | 5-50 | -3.177 |
| Dibutyl Phthalate | 1.504 | 8892 | >5000 | 0.267 | 514 | 300-2000 | -0.807 |
| Dichlorvos (DDVP) | -0.576 | 59 | 50-300 | 0.140 | 305 | 300-2000 | -1.095 |
| Diethyl Phthalate | 1.622 | 9311 | >5000 | 0.482 | 674 | 300-2000 | -0.316 |
| Digoxin | -1.441 | 28 | 5-50 | 0.514 | 2550 | 2000-5000 | -0.244 |
| Dimethylformamide | 1.861 | 5305 | >5000 | 1.435 | 1990 | 300-2000 | 1.854 |
| Diquat Dibromide Monohydrate | -0.355 | 160 | 50-300 | -0.105 | 284 | 50-300 | -1.654 |
| Disulfoton | -1.739 | 5 | <5 | 0.693 | 1352 | 300-2000 | 0.163 |
| Endosulfan | -1.165 | 28 | 5-50 | -0.187 | 265 | 50-300 | -1.840 |
| Ethanol | 2.391 | 11324 | >5000 | 1.565 | 1693 | 300-2000 | 2.151 |
| Ethylene glycol | 2.062 | 7161 | >5000 | 1.760 | 3574 | 2000-5000 | 2.595 |
| Fenpropathrin | -0.664 | 76 | 50-300 | 0.105 | 445 | 300-2000 | -1.175 |
| Gibberellic Acid | 1.241 | 6039 | >5000 | 1.215 | 5683 | >5000 | 1.353 |
| Glutethimide | 0.441 | 600 | 300-2000 | 0.586 | 838 | 300-2000 | -0.079 |
| Glycerol | 2.332 | 19770 | >5000 | 1.684 | 4452 | 2000-5000 | 2.422 |
| Haloperidol | -0.057 | 330 | 300-2000 | -0.164 | 258 | 50-300 | -1.788 |
| Hexachlorophene | -0.696 | 82 | 50-300 | -0.251 | 228 | 50-300 | -1.987 |
| Lactic Acid | 1.606 | 3635 | 2000-5000 | 1.292 | 1765 | 300-2000 | 1.529 |
| Lindane | -0.464 | 100 | 50-300 | 0.438 | 798 | 300-2000 | -0.416 |
| Lithium carbonate | 0.902 | 590 | 300-2000 | 1.008 | 752 | 300-2000 | 0.881 |
| Meprobamate | 0.803 | 1387 | 300-2000 | 0.775 | 1301 | 300-2000 | 0.351 |
| Mercury Chloride | -0.830 | 40 | 5-50 | -0.177 | 180 | 50-300 | -1.819 |
| Nicotine | -0.367 | 70 | 50-300 | 0.774 | 963 | 300-2000 | 0.347 |

## 3T3 NRU Predictions: RC Rat-Only Millimole Regression
## Log $LD_{50}$ (mmol/kg) = 0.439 log $IC_{50}$ (mM) + 0.621

| Reference Substance[1] | Log Reference $LD_{50}$ (mmol/kg)[2] | Reference $LD_{50}$ (mg/kg)[2] | Observed Toxicity Category[3] (mg/kg) | Log Predicted $LD_{50}$ (mmol/kg)[4] | Predicted $LD_{50}$ (mg/kg)[5] | Predicted Toxicity Category[3] (mg/kg) | 3T3 Log $IC_{50}$ (mM)[6] |
|---|---|---|---|---|---|---|---|
| Paraquat | -0.443 | 93 | 50-300 | 0.135 | 351 | 300-2000 | -1.106 |
| Parathion | -1.679 | 6 | 5-50 | 0.230 | 494 | 300-2000 | -0.891 |
| Phenobarbital | -0.016 | 224 | 50-300 | 0.798 | 1457 | 300-2000 | 0.402 |
| Phenol | 0.765 | 548 | 300-2000 | 0.554 | 337 | 300-2000 | -0.152 |
| Phenylthiourea | -1.705 | 3 | <5 | 0.496 | 477 | 300-2000 | -0.285 |
| Physostigmine | -1.741 | 5 | <5 | 0.175 | 412 | 300-2000 | -1.015 |
| Potassium Cyanide | -0.956 | 7 | 5-50 | 0.501 | 206 | 50-300 | -0.274 |
| Potassium chloride | 1.575 | 2802 | 2000-5000 | 1.358 | 1699 | 300-2000 | 1.678 |
| Procainamide HCl | 0.856 | 1950 | 300-2000 | 0.713 | 1404 | 300-2000 | 0.210 |
| Propranolol | 0.197 | 466 | 300-2000 | 0.041 | 325 | 300-2000 | -1.321 |
| Sodium Arsenite | -0.474 | 44 | 5-50 | -0.360 | 57 | 50-300 | -2.234 |
| Sodium Chloride | 1.841 | 4050 | 2000-5000 | 1.459 | 1683 | 300-2000 | 1.910 |
| Sodium Dichromate Dihydrate | -0.771 | 50 | 50-300 | -0.567 | 81 | 50-300 | -2.706 |
| Sodium Hypochlorite | 2.142 | 10328 | >5000 | 1.124 | 990 | 300-2000 | 1.145 |
| Sodium Oxalate | 0.674 | 633 | 300-2000 | 0.376 | 319 | 300-2000 | -0.557 |
| Sodium fluoride | 0.480 | 127 | 50-300 | 0.739 | 230 | 50-300 | 0.269 |
| Sodium selenate | -1.799 | 3 | <5 | 0.264 | 347 | 300-2000 | -0.814 |
| Strychnine | -1.725 | 6 | 5-50 | 0.478 | 1005 | 300-2000 | -0.326 |
| Thallium Sulfate | -1.305 | 25 | 5-50 | -0.243 | 288 | 50-300 | -1.968 |
| Trichloroacetic Acid | 1.505 | 5229 | >5000 | 0.947 | 1445 | 300-2000 | 0.742 |
| Triethylenemelamine | -1.708 | 4 | <5 | -0.641 | 47 | 5-50 | -2.875 |
| Triphenyltin Hydroxide | -0.047 | 329 | 300-2000 | -1.279 | 19 | 5-50 | -4.329 |
| Valproic Acid | 0.839 | 996 | 300-2000 | 0.954 | 1296 | 300-2000 | 0.758 |
| Verapamil HCl | -0.646 | 111 | 50-300 | 0.117 | 643 | 300-2000 | -1.148 |
| Xylene | 1.643 | 4665 | 2000-5000 | 0.986 | 1028 | 300-2000 | 0.832 |

[1]Three chemicals were excluded because no rat oral $LD_{50}$ was identified: epinephrine bitartrate, colchicine, and propylparaben. Carbon tetrachloride and methanol were excluded because $IC_{50}$ values could not be determined.
[2]Reference $LD_{50}$ in mmol/kg from **Table 4-2**. Reference rat oral $LD_{50}$ values were developed from rat acute oral $LD_{50}$ studies located using literature searches, secondary references, and electronic database searches.
[3]Globally Harmonized System (GHS) hazard classification (UN 2005):

| Abbreviation | Category | Oral $LD_{50}$ Limits |
|---|---|---|
| <5 | 1 | $LD_{50} \leq 5$ mg/kg |
| 5-50 | 2 | $5 < LD_{50} \leq 50$ mg/kg |
| 50-300 | 3 | $50 < LD_{50} \leq 300$ mg/kg |
| 300-2000 | 4 | $300 < LD_{50} \leq 2000$ mg/kg |
| 2000-5000 | 5 | $2000 < LD_{50} \leq 5000$ mg/kg |
| >5000 | Unclassified | $LD_{50} > 5000$ mg/kg |

[4]$LD_{50}$ determined using NRU $IC_{50}$ in RC rat-only millimole regression: Log $LD_{50}$ (mmol/kg) = 0.439 log $IC_{50}$ (mM) + 0.621.
[5]$LD_{50}$ in mg/kg (converted from results of RC rat-only millimole regression).
[6]Combined 3T3 $IC_{50}$ values from three laboratories.

# Appendix J4

## NHK NRU Predictions: RC Rat-Only Millimole Regression

***[This Page Intentionally Left Blank]***

## NHK NRU Predictions: RC Rat-Only Millimole Regression
## Log $LD_{50}$ (mmol/kg) = 0.439 log $IC_{50}$ (mM) + 0.621

| Reference Substance[1] | Log Reference $LD_{50}$ (mmol/kg)[2] | Reference $LD_{50}$ (mg/kg)[2] | Observed Toxicity Category[3] (mg/kg) | Log Predicted $LD_{50}$ (mmol/kg)[4] | Predicted $LD_{50}$ (mg/kg)[5] | Predicted Toxicity Category[3] (mg/kg) | NHK Log $IC_{50}$ (mM)[6] |
|---|---|---|---|---|---|---|---|
| 1,1,1-Trichloroethane | 1.957 | 12078 | >5000 | 3.478 | 3009 | 2000-5000 | 1.784 |
| 2-Propanol | 1.929 | 5105 | >5000 | 3.411 | 2579 | 300-2000 | 1.951 |
| 5-Aminosalicylic Acid | 1.350 | 3428 | 2000-5000 | 2.645 | 442 | 300-2000 | -0.516 |
| Acetaminophen | 1.155 | 2162 | 2000-5000 | 3.034 | 1081 | 300-2000 | 0.535 |
| Acetonitrile | 1.942 | 3595 | 2000-5000 | 3.505 | 3196 | 300-2000 | 2.367 |
| Acetylsalicylic Acid | 0.922 | 1506 | 300-2000 | 3.059 | 1145 | 300-2000 | 0.526 |
| Aminopterin | -1.799 | 7 | 5-50 | 3.073 | 1184 | 5-50 | 0.177 |
| Amitriptyline HCl | 0.046 | 349 | 300-2000 | 2.378 | 239 | 50-300 | -1.545 |
| Arsenictrioxide | -0.897 | 25 | 5-50 | 2.335 | 216 | 50-300 | -1.461 |
| Atropine Sulfate | 0.071 | 819 | 300-2000 | 2.736 | 544 | 300-2000 | -0.929 |
| Boric Acid | 1.744 | 3426 | 2000-5000 | 3.000 | 1001 | 300-2000 | 0.833 |
| Busulfan | -1.308 | 12 | 5-50 | 2.922 | 836 | 300-2000 | 0.024 |
| Cadmium chloride | -0.132 | 135 | 50-300 | 2.119 | 131 | 50-300 | -2.009 |
| Caffeine | 0.203 | 310 | 300-2000 | 3.067 | 1168 | 300-2000 | 0.516 |
| Carbamazepine | 1.075 | 2807 | 2000-5000 | 2.738 | 547 | 300-2000 | -0.453 |
| Chloral Hydrate | 0.586 | 638 | 300-2000 | 2.814 | 652 | 300-2000 | -0.094 |
| Chloramphenicol | 1.033 | 3490 | 2000-5000 | 2.968 | 929 | 300-2000 | 0.028 |
| Citric Acid | 1.489 | 5929 | >5000 | 2.997 | 992 | 300-2000 | 0.331 |
| Cupric Sulfate Pentahydrate | 0.279 | 475 | 300-2000 | 2.877 | 754 | 300-2000 | -0.104 |
| Cycloheximide | -2.148 | 2 | <5 | 1.602 | 40 | 5-50 | -3.584 |
| Dibutyl Phthalate | 1.504 | 8892 | >5000 | 2.566 | 368 | 300-2000 | -0.987 |
| Dichlorvos (DDVP) | -0.576 | 59 | 50-300 | 2.407 | 255 | 50-300 | -1.315 |
| Diethyl Phthalate | 1.622 | 9311 | >5000 | 2.798 | 628 | 300-2000 | -0.266 |
| Digoxin | -1.441 | 28 | 5-50 | 0.909 | 8 | 5-50 | -5.889 |
| Dimethylformamide | 1.861 | 5305 | >5000 | 3.471 | 2958 | 2000-5000 | 2.026 |
| Diquat Dibromide Monohydrate | -0.355 | 160 | 50-300 | 2.261 | 182 | 50-300 | -1.922 |
| Disulfoton | -1.739 | 5 | <5 | 2.928 | 848 | 300-2000 | -0.007 |
| Endosulfan | -1.165 | 28 | 5-50 | 2.146 | 140 | 50-300 | -2.282 |
| Ethanol | 2.391 | 11324 | >5000 | 3.512 | 3253 | 2000-5000 | 2.337 |
| Ethyleneglycol | 2.062 | 7161 | >5000 | 3.744 | 5549 | 2000-5000 | 2.831 |
| Fenpropathrin | -0.664 | 76 | 50-300 | 2.167 | 147 | 50-300 | -2.158 |
| Gibberellic Acid | 1.241 | 6039 | >5000 | 3.310 | 2040 | 2000-5000 | 0.916 |
| Glutethimide | 0.441 | 600 | 300-2000 | 2.857 | 720 | 300-2000 | -0.098 |
| Glycerol | 2.332 | 19770 | >5000 | 3.658 | 4553 | 2000-5000 | 2.429 |
| Haloperidol | -0.057 | 330 | 300-2000 | 2.220 | 166 | 50-300 | -2.049 |
| Hexachlorophene | -0.696 | 82 | 50-300 | 1.451 | 28 | 5-50 | -4.149 |
| Lactic Acid | 1.606 | 3635 | 2000-5000 | 3.183 | 1524 | 300-2000 | 1.161 |
| Lindane | -0.464 | 100 | 50-300 | 2.497 | 314 | 300-2000 | -1.191 |
| Lithium carbonate | 0.902 | 590 | 300-2000 | 3.017 | 1040 | 300-2000 | 0.801 |
| Meprobamate | 0.803 | 1387 | 300-2000 | 2.973 | 941 | 300-2000 | 0.213 |
| Mercury Chloride | -0.830 | 40 | 5-50 | 2.308 | 203 | 50-300 | -1.671 |
| Methanol | 2.434 | 8710 | >5000 | 3.209 | 1616 | 300-2000 | 1.679 |
| Nicotine | -0.367 | 70 | 50-300 | 2.778 | 600 | 300-2000 | -0.182 |

## NHK NRU Predictions: RC Rat-Only Millimole Regression
## Log $LD_{50}$ (mmol/kg) = 0.439 log $IC_{50}$ (mM) + 0.621

| Reference Substance[1] | Log Reference $LD_{50}$ (mmol/kg)[2] | Reference $LD_{50}$ (mg/kg)[2] | Observed Toxicity Category[3] (mg/kg) | Log Predicted $LD_{50}$ (mmol/kg)[4] | Predicted $LD_{50}$ (mg/kg)[5] | Predicted Toxicity Category[3] (mg/kg) | NHK Log $IC_{50}$ (mM)[6] |
|---|---|---|---|---|---|---|---|
| Paraquat | -0.443 | 93 | 50-300 | 2.690 | 489 | 300-2000 | -0.621 |
| Parathion | -1.679 | 6 | 5-50 | 2.575 | 376 | 300-2000 | -0.983 |
| Phenobarbital | -0.016 | 224 | 50-300 | 3.010 | 1024 | 300-2000 | 0.285 |
| Phenol | 0.765 | 548 | 300-2000 | 2.722 | 527 | 300-2000 | -0.098 |
| Phenylthiourea | -1.705 | 3 | <5 | 2.964 | 920 | 300-2000 | 0.344 |
| Physostigmine | -1.741 | 5 | <5 | 2.748 | 560 | 300-2000 | -0.493 |
| Potassium Cyanide | -0.956 | 7 | 5-50 | 2.568 | 370 | 50-300 | -0.352 |
| Potassium chloride | 1.575 | 2802 | 2000-5000 | 3.270 | 1862 | 300-2000 | 1.477 |
| Procainamide HCl | 0.856 | 1950 | 300-2000 | 3.230 | 1697 | 2000-5000 | 0.807 |
| Propranolol | 0.197 | 466 | 300-2000 | 2.604 | 402 | 300-2000 | -0.912 |
| Sodium Arsenite | -0.474 | 44 | 5-50 | 1.904 | 80 | 5-50 | -2.435 |
| Sodium Chloride | 1.841 | 4050 | 2000-5000 | 3.252 | 1786 | 300-2000 | 1.534 |
| Sodium Dichromate Dihydrate | -0.771 | 50 | 50-300 | 1.969 | 93 | 50-300 | -2.622 |
| Sodium Hypochlorite | 2.142 | 10328 | >5000 | 3.206 | 1606 | 300-2000 | 1.305 |
| Sodium Oxalate | 0.674 | 633 | 300-2000 | 2.965 | 923 | 300-2000 | 0.404 |
| Sodium fluoride | 0.480 | 127 | 50-300 | 2.652 | 449 | 50-300 | 0.066 |
| Sodium selenate | -1.799 | 3 | <5 | 2.399 | 251 | 50-300 | -1.267 |
| Strychnine | -1.725 | 6 | 5-50 | 2.687 | 486 | 300-2000 | -0.743 |
| Thallium Sulfate | -1.305 | 25 | 5-50 | 1.719 | 52 | 50-300 | -3.522 |
| Trichloroacetic Acid | 1.505 | 5229 | >5000 | 2.997 | 994 | 300-2000 | 0.403 |
| Triethylenemelamine | -1.708 | 4 | <5 | 2.124 | 133 | 50-300 | -2.042 |
| Triphenyltin Hydroxide | -0.047 | 329 | 300-2000 | 1.281 | 19 | 5-50 | -4.562 |
| Valproic Acid | 0.839 | 996 | 300-2000 | 3.032 | 1076 | 300-2000 | 0.550 |
| Verapamil HCl | -0.646 | 111 | 50-300 | 2.702 | 503 | 300-2000 | -0.869 |
| Xylene | 1.643 | 4665 | 2000-5000 | 3.016 | 1039 | 300-2000 | 0.642 |

[1]Three chemicals were excluded because no rat oral $LD_{50}$ was identified: epinephrine bitartrate, colchicine, and propylparaben. Carbon tetrachloride was excluded because $IC_{50}$ values could not be determined.
[2]Reference $LD_{50}$ in mmol/kg from **Table 4-2**. Reference rat oral $LD_{50}$ values were developed from rat acute oral $LD_{50}$ studies located using literature searches, secondary references, and electronic database searches.
[3]Globally Harmonized System (GHS) hazard classification (UN 2005):

| Abbreviation | Category | Oral $LD_{50}$ Limits |
|---|---|---|
| <5 | 1 | $LD_{50} \leq 5$ mg/kg |
| 5-50 | 2 | $5 < LD_{50} \leq 50$ mg/kg |
| 50-300 | 3 | $50 < LD_{50} \leq 300$ mg/kg |
| 300-2000 | 4 | $300 < LD_{50} \leq 2000$ mg/kg |
| 2000-5000 | 5 | $2000 < LD_{50} \leq 5000$ mg/kg |
| >5000 | Unclassified | $LD_{50} > 5000$ mg/kg |

[4]$LD_{50}$ determined using NRU $IC_{50}$ in RC rat-only millimole regression: Log $LD_{50}$ (mmol/kg) = 0.439 log $IC_{50}$ (mM) + 0.621
[5]$LD_{50}$ in mg/kg (converted from results of RC rat-only millimole regression)
[6]Combined NHK $IC_{50}$ values from three laboratories

# Appendix J5

## 3T3 NRU Predictions: RC Rat-Only Weight Regression

***[This Page Intentionally Left Blank]***

## 3T3 NRU Predictions: RC Rat-Only Weight Regression
## Log $LD_{50}$ (mg/kg) = 0.372 log $IC_{50}$ (ug/mL) + 2.024

| Reference Substance[1] | Log Reference $LD_{50}$ (mg/kg)[2] | Reference $LD_{50}$ (mg/kg)[2] | Observed Toxicity Category[3] (mg/kg) | Log Predicted $LD_{50}$ (mg/kg)[4] | Predicted $LD_{50}$ (mg/kg)[5] | Predicted Toxicity Category[3] (mg/kg) | 3T3 Log $IC_{50}$ (ug/mL)[6] |
|---|---|---|---|---|---|---|---|
| 1,1,1-Trichloroethane | 4.082 | 12078 | >5000 | 3.628 | 5078 | >5000 | 4.311 |
| 2-Propanol | 3.708 | 5105 | >5000 | 3.342 | 1494 | 300-2000 | 3.543 |
| 5-Aminosalicylic Acid | 3.535 | 3428 | 2000-5000 | 3.223 | 1825 | 300-2000 | 3.222 |
| Acetaminophen | 3.335 | 2162 | 2000-5000 | 2.648 | 381 | 300-2000 | 1.678 |
| Acetonitrile | 3.556 | 3595 | 2000-5000 | 3.475 | 1731 | 300-2000 | 3.900 |
| Acetylsalicylic Acid | 3.178 | 1506 | 300-2000 | 3.077 | 1346 | 300-2000 | 2.830 |
| Aminopterin | 0.845 | 7 | 5-50 | 1.207 | 14 | 5-50 | -2.195 |
| Amitriptyline HCl | 2.543 | 349 | 300-2000 | 2.340 | 248 | 50-300 | 0.848 |
| Arsenictrioxide | 1.400 | 25 | 5-50 | 2.142 | 112 | 50-300 | 0.316 |
| Atropine Sulfate | 2.913 | 819 | 300-2000 | 2.724 | 1099 | 300-2000 | 1.881 |
| Boric Acid | 3.535 | 3426 | 2000-5000 | 3.239 | 1149 | 300-2000 | 3.267 |
| Busulfan | 1.084 | 12 | 5-50 | 2.727 | 620 | 300-2000 | 1.890 |
| Cadmium chloride | 2.131 | 135 | 50-300 | 1.918 | 58 | 50-300 | -0.286 |
| Caffeine | 2.491 | 310 | 300-2000 | 2.836 | 730 | 300-2000 | 2.183 |
| Carbamazepine | 3.448 | 2807 | 2000-5000 | 2.773 | 686 | 300-2000 | 2.014 |
| Chloral Hydrate | 2.805 | 638 | 300-2000 | 2.866 | 723 | 300-2000 | 2.263 |
| Chloramphenicol | 3.543 | 3490 | 2000-5000 | 2.811 | 906 | 300-2000 | 2.115 |
| Citric Acid | 3.773 | 5929 | >5000 | 3.097 | 1472 | 300-2000 | 2.884 |
| Cupric Sulfate Pentahydrate | 2.677 | 475 | 300-2000 | 2.610 | 455 | 300-2000 | 1.576 |
| Cycloheximide | 0.301 | 2 | <5 | 1.753 | 47 | 5-50 | -0.727 |
| Dibutyl Phthalate | 3.949 | 8892 | >5000 | 2.633 | 514 | 300-2000 | 1.637 |
| Dichlorvos (DDVP) | 1.769 | 59 | 50-300 | 2.489 | 305 | 300-2000 | 1.249 |
| Diethyl Phthalate | 3.969 | 9311 | >5000 | 2.779 | 674 | 300-2000 | 2.031 |
| Digoxin | 1.451 | 28 | 5-50 | 3.009 | 2550 | 2000-5000 | 2.649 |
| Dimethylformamide | 3.725 | 5305 | >5000 | 3.407 | 1990 | 300-2000 | 3.718 |
| Diquat Dibromide Monohydrate | 2.204 | 160 | 50-300 | 2.361 | 284 | 50-300 | 0.905 |
| Disulfoton | 0.699 | 5 | <5 | 2.992 | 1352 | 300-2000 | 2.602 |
| Endosulfan | 1.444 | 28 | 5-50 | 2.310 | 265 | 50-300 | 0.770 |
| Ethanol | 4.054 | 11324 | >5000 | 3.443 | 1693 | 300-2000 | 3.814 |
| Ethyleneglycol | 3.855 | 7161 | >5000 | 3.656 | 3574 | 2000-5000 | 4.388 |
| Fenpropathrin | 1.879 | 76 | 50-300 | 2.533 | 445 | 300-2000 | 1.368 |
| Gibberellic Acid | 3.781 | 6039 | >5000 | 3.472 | 5683 | >5000 | 3.893 |
| Glutethimide | 2.778 | 600 | 300-2000 | 2.864 | 838 | 300-2000 | 2.258 |
| Glycerol | 4.296 | 19770 | >5000 | 3.656 | 4452 | 2000-5000 | 4.386 |
| Haloperidol | 2.519 | 330 | 300-2000 | 2.317 | 258 | 50-300 | 0.787 |
| Hexachlorophene | 1.914 | 82 | 50-300 | 2.256 | 228 | 50-300 | 0.623 |
| Lactic Acid | 3.561 | 3635 | 2000-5000 | 3.320 | 1765 | 300-2000 | 3.483 |
| Lindane | 2.000 | 100 | 50-300 | 2.786 | 798 | 300-2000 | 2.047 |
| Lithium carbonate | 2.771 | 590 | 300-2000 | 3.047 | 752 | 300-2000 | 2.749 |
| Meprobamate | 3.142 | 1387 | 300-2000 | 3.025 | 1301 | 300-2000 | 2.690 |
| Mercury Chloride | 1.604 | 40 | 5-50 | 2.253 | 180 | 50-300 | 0.615 |
| Nicotine | 1.843 | 70 | 50-300 | 2.975 | 963 | 300-2000 | 2.557 |

## 3T3 NRU Predictions: RC Rat-Only Weight Regression
## Log $LD_{50}$ (mg/kg) = 0.372 log $IC_{50}$ (ug/mL) + 2.024

| Reference Substance[1] | Log Reference $LD_{50}$ (mg/kg)[2] | Reference $LD_{50}$ (mg/kg)[2] | Observed Toxicity Category[3] (mg/kg) | Log Predicted $LD_{50}$ (mg/kg)[4] | Predicted $LD_{50}$ (mg/kg)[5] | Predicted Toxicity Category[3] (mg/kg) | 3T3 Log $IC_{50}$ (ug/mL)[6] |
|---|---|---|---|---|---|---|---|
| Paraquat | 1.967 | 93 | 50-300 | 2.509 | 351 | 300-2000 | 1.304 |
| Parathion | 0.785 | 6 | 5-50 | 2.609 | 494 | 300-2000 | 1.573 |
| Phenobarbital | 2.350 | 224 | 50-300 | 3.054 | 1457 | 300-2000 | 2.768 |
| Phenol | 2.739 | 548 | 300-2000 | 2.702 | 337 | 300-2000 | 1.822 |
| Phenylthiourea | 0.477 | 3 | <5 | 2.730 | 477 | 300-2000 | 1.898 |
| Physostigmine | 0.699 | 5 | <5 | 2.554 | 412 | 300-2000 | 1.425 |
| Potassium Cyanide | 0.857 | 7 | 5-50 | 2.597 | 206 | 50-300 | 1.540 |
| Potassium chloride | 3.447 | 2802 | 2000-5000 | 3.345 | 1699 | 300-2000 | 3.551 |
| Procainamide HCl | 3.290 | 1950 | 300-2000 | 3.008 | 1404 | 300-2000 | 2.644 |
| Propranolol | 2.668 | 466 | 300-2000 | 2.452 | 325 | 300-2000 | 1.150 |
| Sodium Arsenite | 1.639 | 44 | 5-50 | 1.979 | 57 | 50-300 | -0.120 |
| Sodium Chloride | 3.607 | 4050 | 2000-5000 | 3.392 | 1683 | 300-2000 | 3.676 |
| Sodium Dichromate Dihydrate | 1.703 | 50 | 50-300 | 1.938 | 81 | 50-300 | -0.232 |
| Sodium Hypochlorite | 4.014 | 10328 | >5000 | 3.146 | 990 | 300-2000 | 3.017 |
| Sodium Oxalate | 2.801 | 633 | 300-2000 | 2.608 | 319 | 300-2000 | 1.570 |
| Sodium fluoride | 2.103 | 127 | 50-300 | 2.728 | 230 | 50-300 | 1.892 |
| Sodium selenate | 0.477 | 3 | <5 | 2.568 | 347 | 300-2000 | 1.463 |
| Strychnine | 0.799 | 6 | 5-50 | 2.842 | 1005 | 300-2000 | 2.198 |
| Thallium Sulfate | 1.398 | 25 | 5-50 | 2.297 | 288 | 50-300 | 0.735 |
| Trichloroacetic Acid | 3.718 | 5229 | >5000 | 3.123 | 1445 | 300-2000 | 2.955 |
| Triethylenemelamine | 0.602 | 4 | <5 | 1.814 | 47 | 5-50 | -0.565 |
| Triphenyltin Hydroxide | 2.517 | 329 | 300-2000 | 1.368 | 19 | 5-50 | -1.764 |
| Valproic Acid | 2.998 | 996 | 300-2000 | 3.109 | 1296 | 300-2000 | 2.917 |
| Verapamil HCl | 2.045 | 111 | 50-300 | 2.598 | 643 | 300-2000 | 1.543 |
| Xylene | 3.669 | 4665 | 2000-5000 | 3.087 | 1028 | 300-2000 | 2.858 |

[1]Three chemicals were excluded because no rat oral $LD_{50}$ was identified: epinephrine bitartrate, colchicine, and propylparaben. Carbon tetrachloride and methanol were excluded because $IC_{50}$ values could not be determined.
[2]Reference $LD_{50}$ in mmol/kg from **Table 4-2**. Reference rat oral $LD_{50}$ values were developed from rat acute oral $LD_{50}$ studies located using literature searches, secondary references, and electronic database searches.
[3]Globally Harmonized System (GHS) hazard classification (UN 2005):

| Abbreviation | Category | Oral $LD_{50}$ Limits |
|---|---|---|
| <5 | 1 | $LD_{50} \leq 5$ mg/kg |
| 5-50 | 2 | $5 < LD_{50} \leq 50$ mg/kg |
| 50-300 | 3 | $50 < LD_{50} \leq 300$ mg/kg |
| 300-2000 | 4 | $300 < LD_{50} \leq 2000$ mg/kg |
| 2000-5000 | 5 | $2000 < LD_{50} \leq 5000$ mg/kg |
| >5000 | Unclassified | $LD_{50} > 5000$ mg/kg |

[4]$LD_{50}$ determined using NRU $IC_{50}$ in RC rat-only weight regression: Log $LD_{50}$ (mg/kg) = 0.372 log $IC_{50}$ (ug/mL) + 2.024
[5]$LD_{50}$ in mg/kg (converted from results of RC rat-only weight regression)
[6]Combined 3T3 $IC_{50}$ values from three laboratories

# Appendix J6

## NHK NRU Predictions: RC Rat-Only Weight Regression

***[This Page Intentionally Left Blank]***

## NHK NRU Predictions: RC Rat-Only Weight Regression
## Log $LD_{50}$ (mg/kg) = 0.372 log $IC_{50}$ (ug/mL) + 2.024

| Reference Substance[1] | Log Reference $LD_{50}$ (mg/kg)[2] | Reference $LD_{50}$ (mg/kg)[2] | Observed Toxicity Category[3] (mg/kg) | Log Predicted $LD_{50}$ (mg/kg)[4] | Predicted $LD_{50}$ (mg/kg)[5] | Predicted Toxicity Category[3] (mg/kg) | NHK Log $IC_{50}$ (ug/mL)[6] |
|---|---|---|---|---|---|---|---|
| 1,1,1-Trichloroethane | 1.957 | 12078 | >5000 | 3.478 | 3009 | 2000-5000 | 3.910 |
| 2-Propanol | 1.929 | 5105 | >5000 | 3.411 | 2579 | 300-2000 | 3.730 |
| 5-Aminosalicylic Acid | 1.350 | 3428 | 2000-5000 | 2.645 | 442 | 300-2000 | 1.669 |
| Acetaminophen | 1.155 | 2162 | 2000-5000 | 3.034 | 1081 | 300-2000 | 2.714 |
| Acetonitrile | 1.942 | 3595 | 2000-5000 | 3.505 | 3196 | 300-2000 | 3.980 |
| Acetylsalicylic Acid | 0.922 | 1506 | 300-2000 | 3.059 | 1145 | 300-2000 | 2.782 |
| Aminopterin | -1.799 | 7 | 5-50 | 3.073 | 1184 | 2000-5000 | 2.821 |
| Amitriptyline HCl | 0.046 | 349 | 300-2000 | 2.378 | 239 | 50-300 | 0.952 |
| Arsenictrioxide | -0.897 | 25 | 5-50 | 2.335 | 216 | 50-300 | 0.835 |
| Atropine Sulfate | 0.071 | 819 | 300-2000 | 2.736 | 544 | 300-2000 | 1.913 |
| Boric Acid | 1.744 | 3426 | 2000-5000 | 3.000 | 1001 | 300-2000 | 2.625 |
| Busulfan | -1.308 | 12 | 5-50 | 2.922 | 836 | 300-2000 | 2.415 |
| Cadmium chloride | -0.132 | 135 | 50-300 | 2.119 | 131 | 50-300 | 0.255 |
| Caffeine | 0.203 | 310 | 300-2000 | 3.067 | 1168 | 300-2000 | 2.805 |
| Carbamazepine | 1.075 | 2807 | 2000-5000 | 2.738 | 547 | 300-2000 | 1.920 |
| Chloral Hydrate | 0.586 | 638 | 300-2000 | 2.814 | 652 | 300-2000 | 2.125 |
| Chloramphenicol | 1.033 | 3490 | 2000-5000 | 2.968 | 929 | 300-2000 | 2.538 |
| Citric Acid | 1.489 | 5929 | >5000 | 2.997 | 992 | 300-2000 | 2.614 |
| Cupric Sulfate Pentahydrate | 0.279 | 475 | 300-2000 | 2.877 | 754 | 300-2000 | 2.293 |
| Cycloheximide | -2.148 | 2 | <5 | 1.602 | 40 | 5-50 | -1.134 |
| Dibutyl Phthalate | 1.504 | 8892 | >5000 | 2.566 | 368 | 300-2000 | 1.458 |
| Dichlorvos (DDVP) | -0.576 | 59 | 50-300 | 2.407 | 255 | 50-300 | 1.029 |
| Diethyl Phthalate | 1.622 | 9311 | >5000 | 2.798 | 628 | 300-2000 | 2.081 |
| Digoxin | -1.441 | 28 | 5-50 | 0.909 | 8 | 5-50 | -2.996 |
| Dimethylformamide | 1.861 | 5305 | >5000 | 3.471 | 2958 | 2000-5000 | 3.890 |
| Diquat Dibromide Monohydrate | -0.355 | 160 | 50-300 | 2.261 | 182 | 50-300 | 0.637 |
| Disulfoton | -1.739 | 5 | <5 | 2.928 | 848 | 300-2000 | 2.431 |
| Endosulfan | -1.165 | 28 | 5-50 | 2.146 | 140 | 50-300 | 0.328 |
| Ethanol | 2.391 | 11324 | >5000 | 3.512 | 3253 | 2000-5000 | 4.001 |
| Ethyleneglycol | 2.062 | 7161 | >5000 | 3.744 | 5549 | 2000-5000 | 4.624 |
| Fenpropathrin | -0.664 | 76 | 50-300 | 2.167 | 147 | 50-300 | 0.385 |
| Gibberellic Acid | 1.241 | 6039 | >5000 | 3.310 | 2040 | 2000-5000 | 3.456 |
| Glutethimide | 0.441 | 600 | 300-2000 | 2.857 | 720 | 300-2000 | 2.239 |
| Glycerol | 2.332 | 19770 | >5000 | 3.658 | 4553 | 2000-5000 | 4.393 |
| Haloperidol | -0.057 | 330 | 300-2000 | 2.220 | 166 | 50-300 | 0.526 |
| Hexachlorophene | -0.696 | 82 | 50-300 | 1.451 | 28 | 5-50 | -1.540 |
| Lactic Acid | 1.606 | 3635 | 2000-5000 | 3.183 | 1524 | 300-2000 | 3.115 |
| Lindane | -0.464 | 100 | 50-300 | 2.497 | 314 | 300-2000 | 1.272 |
| Lithium carbonate | 0.902 | 590 | 300-2000 | 3.017 | 1040 | 300-2000 | 2.670 |
| Meprobamate | 0.803 | 1387 | 300-2000 | 2.973 | 941 | 300-2000 | 2.552 |
| Mercury Chloride | -0.830 | 40 | 5-50 | 2.308 | 203 | 50-300 | 0.763 |
| Methanol | 2.434 | 8710 | >5000 | 3.209 | 1616 | 300-2000 | 3.184 |
| Nicotine | -0.367 | 70 | 50-300 | 2.778 | 600 | 300-2000 | 2.028 |

## NHK NRU Predictions: RC Rat-Only Weight Regression
## Log $LD_{50}$ (mg/kg) = 0.372 log $IC_{50}$ (ug/mL) + 2.024

| Reference Substance[1] | Log Reference $LD_{50}$ (mg/kg)[2] | Reference $LD_{50}$ (mg/kg)[2] | Observed Toxicity Category[3] (mg/kg) | Log Predicted $LD_{50}$ (mg/kg)[4] | Predicted $LD_{50}$ (mg/kg)[5] | Predicted Toxicity Category[3] (mg/kg) | NHK Log $IC_{50}$ (ug/mL)[6] |
|---|---|---|---|---|---|---|---|
| Paraquat | -0.443 | 93 | 50-300 | 2.690 | 489 | 300-2000 | 1.790 |
| Parathion | -1.679 | 6 | 5-50 | 2.575 | 376 | 300-2000 | 1.481 |
| Phenobarbital | -0.016 | 224 | 50-300 | 3.010 | 1024 | 300-2000 | 2.651 |
| Phenol | 0.765 | 548 | 300-2000 | 2.722 | 527 | 300-2000 | 1.875 |
| Phenylthiourea | -1.705 | 3 | <5 | 2.964 | 920 | 300-2000 | 2.527 |
| Physostigmine | -1.741 | 5 | <5 | 2.748 | 560 | 300-2000 | 1.947 |
| Potassium Cyanide | -0.956 | 7 | 5-50 | 2.568 | 370 | 50-300 | 1.462 |
| Potassium chloride | 1.575 | 2802 | 2000-5000 | 3.270 | 1862 | 300-2000 | 3.350 |
| Procainamide HCl | 0.856 | 1950 | 300-2000 | 3.230 | 1697 | 2000-5000 | 3.241 |
| Propranolol | 0.197 | 466 | 300-2000 | 2.604 | 402 | 300-2000 | 1.559 |
| Sodium Arsenite | -0.474 | 44 | 5-50 | 1.904 | 80 | 5-50 | -0.322 |
| Sodium Chloride | 1.841 | 4050 | 2000-5000 | 3.252 | 1786 | 300-2000 | 3.300 |
| Sodium Dichromate Dihydrate | -0.771 | 50 | 50-300 | 1.969 | 93 | 50-300 | -0.148 |
| Sodium Hypochlorite | 2.142 | 10328 | >5000 | 3.206 | 1606 | 300-2000 | 3.177 |
| Sodium Oxalate | 0.674 | 633 | 300-2000 | 2.965 | 923 | 300-2000 | 2.531 |
| Sodium fluoride | 0.480 | 127 | 50-300 | 2.652 | 449 | 50-300 | 1.689 |
| Sodium selenate | -1.799 | 3 | <5 | 2.399 | 251 | 50-300 | 1.009 |
| Strychnine | -1.725 | 6 | 5-50 | 2.687 | 486 | 300-2000 | 1.781 |
| Thallium Sulfate | -1.305 | 25 | 5-50 | 1.719 | 52 | 50-300 | -0.819 |
| Trichloroacetic Acid | 1.505 | 5229 | >5000 | 2.997 | 994 | 300-2000 | 2.616 |
| Triethylenemelamine | -1.708 | 4 | <5 | 2.124 | 133 | 50-300 | 0.268 |
| Triphenyltin Hydroxide | -0.047 | 329 | 300-2000 | 1.281 | 19 | 5-50 | -1.998 |
| Valproic Acid | 0.839 | 996 | 300-2000 | 3.032 | 1076 | 300-2000 | 2.709 |
| Verapamil HCl | -0.646 | 111 | 50-300 | 2.702 | 503 | 300-2000 | 1.823 |
| Xylene | 1.643 | 4665 | 2000-5000 | 3.016 | 1039 | 300-2000 | 2.668 |

[1]Three chemicals were excluded because no rat oral $LD_{50}$ was identified: epinephrine bitartrate, colchicine, and propylparaben. Carbon tetrachloride was excluded because $IC_{50}$ values could not be determined.
[2]Reference $LD_{50}$ in mmol/kg from **Table 4-2**. Reference rat oral $LD_{50}$ values were developed from rat acute oral $LD_{50}$ studies located using literature searches, secondary references, and electronic database searches.
[3]Globally Harmonized System (GHS) hazard classification (UN 2005):

| Abbreviation | Category | Oral $LD_{50}$ Limits |
|---|---|---|
| <5 | 1 | $LD_{50} \leq 5$ mg/kg |
| 5-50 | 2 | $5 < LD_{50} \leq 50$ mg/kg |
| 50-300 | 3 | $50 < LD_{50} \leq 300$ mg/kg |
| 300-2000 | 4 | $300 < LD_{50} \leq 2000$ mg/kg |
| 2000-5000 | 5 | $2000 < LD_{50} \leq 5000$ mg/kg |
| >5000 | Unclassified | $LD_{50} > 5000$ mg/kg |

[4]$LD_{50}$ determined using NRU $IC_{50}$ in RC rat-only weight regression: Log $LD_{50}$ (mg/kg) = 0.372 log $IC_{50}$ (ug/mL) + 2.024
[5]$LD_{50}$ in mg/kg (converted from results of RC rat-only weight regression)
[6]Combined NHK $IC_{50}$ values from three laboratories

# Appendix J7

## Comparison of Millimole Regression with Weight Regression Regarding Prediction of Toxicity ($LD_{50}$) for Low or High Molecular Weight Chemicals

***[This Page Intentionally Left Blank]***

## J.7 The Prediction of Toxicity for High and Low Molecular Weight Substances Using Millimole vs. Weight-Based Regressions

The ICCVAM Acute Toxicity Working Group expressed some concern that the RC rat-only weight regression may less accurately (than the RC rat-only millimole regression) predict the toxicity of low molecular weight substances and high molecular weight substances. Using the RC $IC_{50}$ and $LD_{50}$ values for the 282 RC substances with rat oral $LD_{50}$ data, analyses were performed to

- Determine the difference in the over and under-prediction rates of acute oral toxicity (i.e., $LD_{50}$) from $IC_{50}$ values for low molecular weight substances (i.e., molecular weight ≤100 g/mole) vs. substances with higher molecular weights
- Determine the difference in the over and under-prediction rates of acute oral toxicity from $IC_{50}$ values for high molecular weight substances (i.e., molecular weight ≥400 g/mole) vs. substances with lower molecular weights
- Compare the RC rat-only millimole regression with the RC rat-only weight regression with respect to the over and under-prediction rates of the toxicity of low and high molecular weight substances

### J.7.1 Methods

The data used for to evaluate the over- and under-prediction rates of toxicity of low or high molecular weight chemicals were the RC data rather than the NICEATM/ECVAM validation study data because the RC contains data for many more substances. The RC $IC_{50}$ and $LD_{50}$ values for the 282 RC substances with rat oral $LD_{50}$ data were used since substances with rat data are the focus of the BRD with respect to the prediction of oral $LD_{50}$ (and starting dose for acute oral toxicity testing) from $IC_{50}$ (see **Appendix K-3** for the data used). Over- or under-prediction of toxicity was determined by subtracting the predicted $LD_{50}$ in mg/kg (i.e., the rat oral $LD_{50}$ calculated using the RC $IC_{50}$ in the regression equation) from the observed $LD_{50}$ in mg/kg (i.e., the *in vivo* rat oral $LD_{50}$ from the RC that was used to develop the regression). Negative values indicated that toxicity was underpredicted by the regression (i.e., predicted $LD_{50}$ was greater than observed $LD_{50}$) and positive values indicated that toxicity was overpredicted by the regression (i.e., predicted $LD_{50}$ was less than observed $LD_{50}$). This analysis assumed that the regressions either underpredicted or overpredicted the toxicity of all of the substances evaluated. In other words, there was a difference between the $LD_{50}$ predicted by the regression and the *in vivo* $LD_{50}$ used to calculate the regression even if it was a tiny fraction (i.e., no substances fit the regression exactly).

The proportion of low or high molecular weight chemicals that were under- and over-predicted in terms of acute oral toxicity (i.e., predicted $LD_{50}$ values were higher or lower than reported *in vivo* $LD_{50}$ values, respectively) using a millimole regression were calculated. These proportions were compared with those for chemicals that did not have low or high molecular weights. The same calculations were then performed for a weight-based regression. The proportions of under- and over-prediction of the toxicity for the millimole and weight-based regressions were compared to determine whether the weight regression increased the proportion of low molecular weight chemicals for which toxicity was underpredicted or the proportion of high molecular weight chemicals for which toxicity was overpredicted.

The millimole regression used was the RC rat-only millimole regression. The RC rat-only regression in millimole units, was calculated using the $IC_{50}$ and oral $LD_{50}$ data from the 282 RC chemicals with rat oral $LD_{50}$ values and is strikingly similar in slope and intercept to the original RC millimole regression, which was based on 347 chemicals (282 chemicals with rat $LD_{50}$ data and 65 chemicals with mouse $LD_{50}$ data) (see **Table J7-1**). The weight-based regression used was the RC rat-only weight regression calculated using the $IC_{50}$ and oral $LD_{50}$ values from the 282 RC chemicals with rat oral $LD_{50}$ values (see **Table J7-1**).

**Table J7-1 $IC_{50}$-$LD_{50}$ Linear Regressions**

| Moniker | Data Used | Slope | Intercept | $R^2$ |
|---|---|---|---|---|
| RC millimole regression | 347 RC substances with oral rat and mouse $LD_{50}$ data – millimole units[1] | 0.435 | 0.625 | 0.452 |
| RC rat-only millimole regression | 282 RC substances with rat oral $LD_{50}$ data – millimole units[1] | 0.439 | 0.621 | 0.452 |
| RC rat-only weight regression | 282 RC substances with rat oral $LD_{50}$ data – weight units[2] | 0.372 | 2.024 | 0.325 |

Abbreviations: RC=Registry of Cytotoxicity; $R^2$=coefficient of determination
[1]$IC_{50}$ in mM; $LD_{50}$ in mmol/kg.
[2]$IC_{50}$ in µg/mL; $LD_{50}$ in mg/kg.

J.7.2 Results

**Figures J7-1** and **J7-2** show either the low molecular weight or high molecular weight chemicals plotted with either the RC rat-only millimole regression or the RC rat-only weight regression. Since $LD_{50}$ is inversely related to toxicity, low $LD_{50}$ values indicate high toxicity and high $LD_{50}$ values indicate low toxicity. The regression lines show the predicted $LD_{50}$ for each $IC_{50}$. The regression lines underpredict the toxicity of chemicals that are plotted below the lines (i.e., predicted $LD_{50}$ > *in vivo* $LD_{50}$ and predicted toxicity < *in vivo* toxicity). The regression lines overpredict the toxicity of chemicals that are plotted above the lines (i.e., predicted $LD_{50}$ < *in vivo* $LD_{50}$ and predicted toxicity > *in vivo* toxicity).

Of the 282 RC substances with rat oral $LD_{50}$ values, there were 51 substances with molecular weights ≤100 g/mole and 231 substances with molecular weights >100 g/mole. **Figure J7-1** shows the 51 low molecular weight chemicals (i.e., with molecular weight ≤100 g/mole) graphed with both the RC rat-only millimole regression (**Figure J7-1a**) and the RC rat-only weight regression (**Figure J7-1b**). The RC rat-only millimole regression underestimated the toxicity of 20/51 (39%) substances and overestimated the toxicity of 31/51 (61%) substances (see **Table J7-2**). The RC rat-only weight regression underestimated the toxicity of 24/51 (47%) substances and overestimated the toxicity of 27/51 (53%) substances. Fisher's exact test indicated that there was no difference between the millimole and weight regressions for the under and over-prediction rates of toxicity for the 51 low molecular weight substances (two-tailed p=0.549) (see **Table J7-3**).

## Figure J7-1 Rat-only Regressions Graphed with 51 Chemicals with Molecular Weight ≤100 g/mole

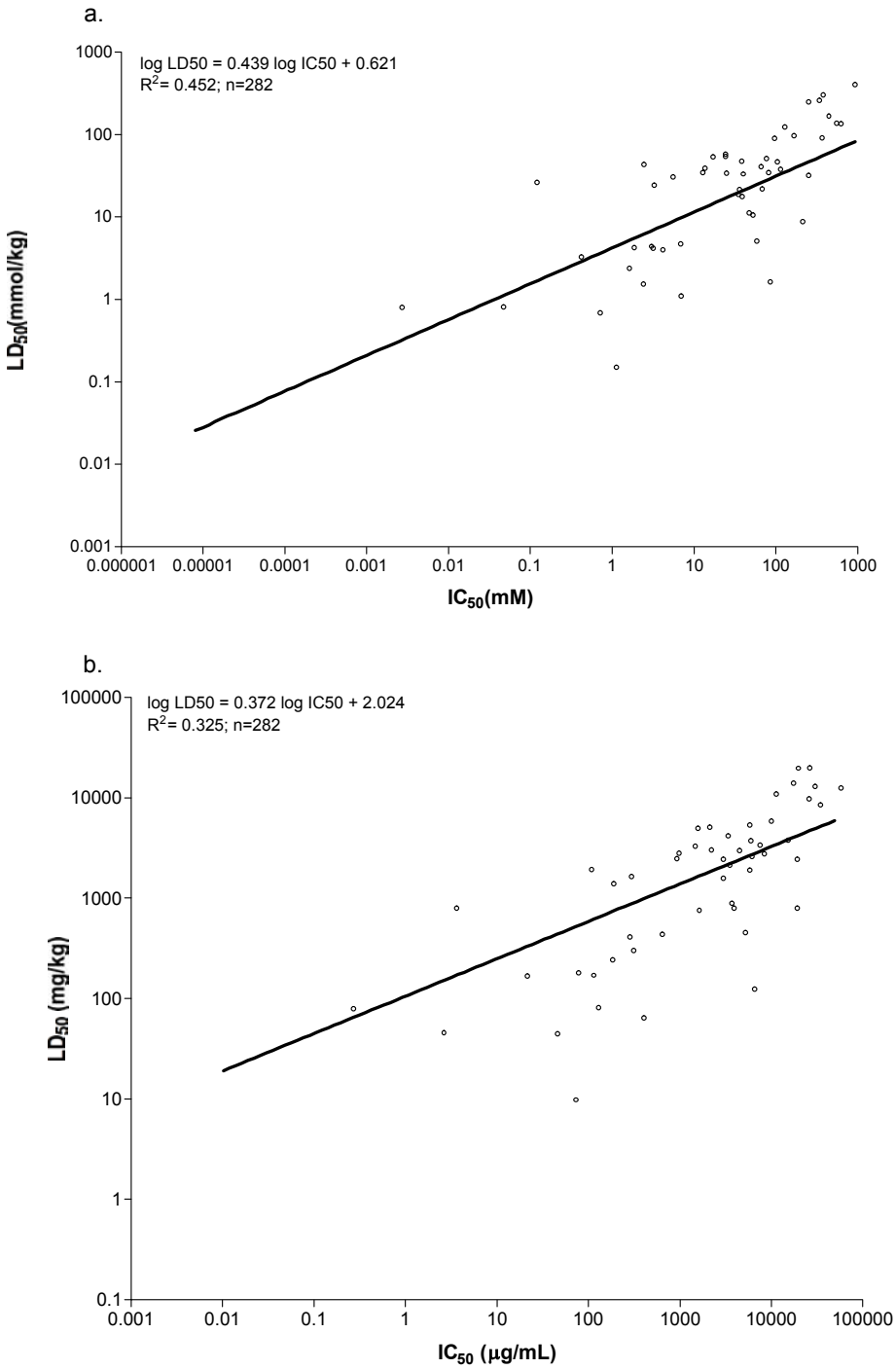


**Figure J7-1a** shows the RC rat-only millimole regression. Toxicity is underpredicted (i.e., predicted $LD_{50}$ > *in vivo* $LD_{50}$) for 20/51 (39%) chemicals. Toxicity is overpredicted (i.e., predicted $LD_{50}$ < *in vivo* $LD_{50}$) for 31/51 (61%) chemicals. **Figure J7-1b** shows the RC rat-only weight regression. Toxicity is underpredicted (i.e., predicted $LD_{50}$ > *in vivo* $LD_{50}$) for 24/51 (47%) chemicals. Toxicity is overpredicted (i.e., predicted $LD_{50}$ < *in vivo* $LD_{50}$) for 27/51 (53%) chemicals.

**Table J7-2 Over- and Under Prediction of Toxicity for Low and High Molecular Weight Chemicals Using RC Rat-only Weight and Millimole Regressions**

| Regression | Toxicity Underpredicted | Toxicity Overpredicted | Toxicity Underpredicted | Toxicity Overpredicted |
|---|---|---|---|---|
| | 51 Chemicals with Molecular Weight ≤100 g/mole | | 231 Chemicals with Molecular Weight >100 g/mole | |
| RC Rat-only Weight | 24/51 (47%) | 27/51 (53%) | 101/231 (44%) | 130/231 (57%) |
| RC Rat-only Millimole | 20/51 (39%) | 31/51 (61%) | 108/231 (47%) | 123/231 (53%) |
| | 20 Chemicals with Molecular Weight ≥400 g/mole | | 262 Chemicals with Molecular Weight <400 g/mole | |
| RC Rat-only Weight | 4/20 (20%) | 16/20 (80%) | 121/262 (46%) | 141/262 (54%) |
| RC Rat-only Millimole | 7/20 (35%) | 13/20 (65%) | 121/262 (46%) | 141/262 (54%) |

**Table J7-3 Over- and Under Prediction of Toxicity for Low and High Molecular Weight Substances Using RC Rat-Only Weight and Millimole Regressions**

| Comparison | For | Fisher's Exact Test[1] |
|---|---|---|
| RC rat-only millimole vs. RC rat-only weight regression | Under- and over-prediction of toxicity for 51 substances with molecular weight ≤100 g/mole | 0.549 |
| RC rat-only millimole vs. RC rat-only weight regression | Under- and over-prediction of toxicity for 231 substances with molecular weight >100 g/mole | 0.575 |
| 51 Low molecular weight (≤100 g/mole) substances vs. 231 other substances (>100 g/mole) | RC rat-only millimole regression | 0.355 |
| 51 Low molecular weight (≤100 g/mole) substances vs. 231 other substances (>100 g/mole) | RC rat-only weight regression | 0.756 |
| RC rat-only millimole vs. RC rat-only weight regression | Under- and over-prediction of toxicity for 20 substances with molecular weight ≥400 g/mole | 0.480 |
| RC rat-only millimole vs. RC rat-only weight regression | Under- and over-prediction of toxicity for 262 substances with molecular weight <400 g/mole | NT |
| 20 High molecular weight substances (≥400 g/mole) vs. 262 other substances (<400 g/mole) | RC rat-only millimole regression | 0.362 |
| 20 High molecular weight substances (≥400 g/mole) vs. 262 other substances (<400 g/mole) | RC rat-only weight regression | 0.033 |

Abbreviations: RC=Registry of Cytotoxicity; NT=Not tested since the proportions were the same.
Toxicity was underpredicted for 121/262 (46%) substances and overpredicted for 141/262 (54%) substances.
[1]P-values.

For the 231 substances with molecular weights >100 g/mole, the RC rat-only millimole regression underestimated the toxicity of 108/231 (47%) substances and overestimated the toxicity of 123/231 (53%) substances (see **Table J7-2**). The RC rat-only weight regression underestimated the toxicity of 101/231 (44%) substances and overestimated the toxicity of 130/231 (57%) substances. Fisher's exact test indicated that there was no difference between the millimole and weight regressions for the under- and over-prediction rates for the 231 substances with molecular weight >100 g/mole (two-tailed p=0.575; see **Table J7-3**). Additionally, Fisher's exact test also showed that there was no difference in the under- and over-prediction rates for the 51 substances with molecular weight ≤100 g/mole compared to the under- and over-prediction of the toxicity of the 231 substances with molecular weight >100 g/mole (two-tailed p=0.756 for the RC rat-only weight regression and two-tailed p=0.355 for the RC rat-only millimole regression).

Of the 282 RC substances with rat oral $LD_{50}$ values, there were 20 substances with molecular weights ≥400 g/mole and 262 substances with molecular weights <400 g/mole (see **Table J7-2**). **Figure J7-2** shows the 20 chemicals with molecular weights ≥400 g/mole plotted with the RC rat-only milllimole regression (**Figure J7-2a**) and the RC rat-only weight regression (**Figure J7-2b**). The RC rat-only millimole regression underestimated the toxicity of 7/20 (35%) substances and overestimated the toxicity of 13/20 (65%) substances (see **Table J7-2**). The RC rat-only weight regression underestimated the toxicity of 4/20 (20%) substances and overestimated the toxicity of 16/20 (80%) substances. Fisher's exact test indicated that there was no difference between the millimole and weight regressions for the under- and over-prediction of toxicity for the 20 high molecular weight substances (two-tailed p=0.480; see **Table J7-3**).

For the remaining 262 substances with molecular weights <400 g/mole, the RC rat-only millimole and the RC rat-only weight regressions both underestimated the toxicity of 121/262 (46%) substances and overestimated toxicity of 141/262 (54%) substances (see **Table J7-2**). Thus, there was no difference in the two regressions in the rates of under- and over-estimation of toxicity for the 262 substances with molecular weights <400 g/mole. Fisher's exact test also showed that there was no difference in the rates for under- and over-prediction of the toxicity of substances with high molecular weight (≥400 g/mole) compared with the under- and over-prediction of the toxicity of substances with lower molecular weight for the RC rat-only millimole regression (two-tailed p=0.362; see **Table J7-3**). For the RC rat-only weight regression, however, there was a significant difference in the under- and over-prediction rates for substances with high molecular weight (>400 g/mole) compared with the under- and over-prediction rates for substances with lower molecular weight (two-tailed p =0.033). Thus, the weight-based regression overestimated the toxicity of the high molecular weight substances (compared with substances with lower molecular weight) while the millimole regression did not.

**Figure J7-2 Rat-only Regressions Graphed with 20 Chemicals with Molecular Weight ≥400 g/mole**

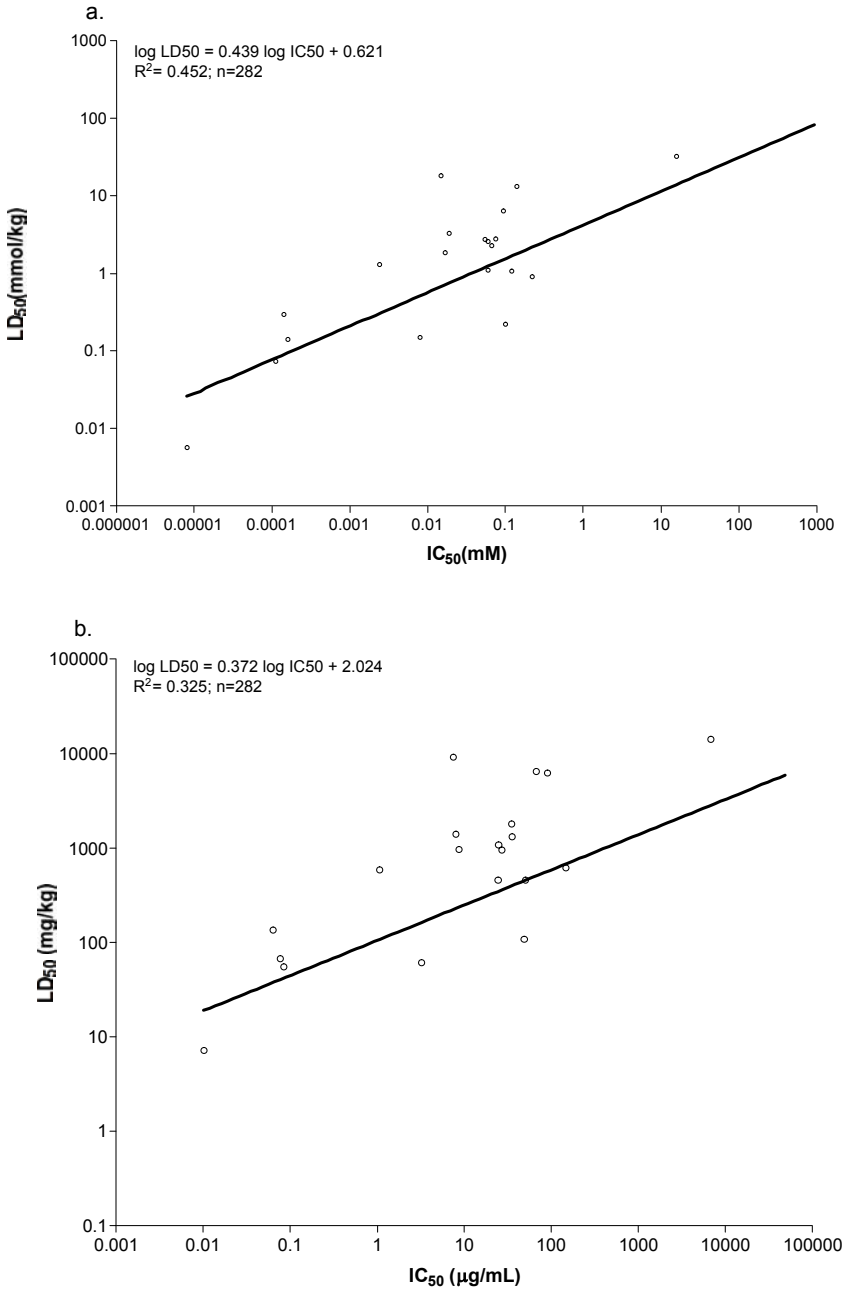


**Figure J7-2a** shows the RC rat-only millimole regression. Toxicity is underpredicted (i.e., predicted $LD_{50}$ > *in vivo* $LD_{50}$) for 7/20 (35%) chemicals. Toxicity is overpredicted (i.e., predicted $LD_{50}$ < *in vivo* $LD_{50}$) for 13/20 (65%) chemicals. **Figure J7-2b** shows the RC rat-only weight regression. Toxicity is underpredicted (i.e., predicted $LD_{50}$ > *in vivo* $LD_{50}$) for 4/20 (20%) chemicals. Toxicity is overpredicted (i.e., predicted $LD_{50}$ < *in vivo* $LD_{50}$) for 16/20 (80%) chemicals.

# Appendix K

## $IC_{50}$ and $LD_{50}$ Data for Regressions

**K1 $IC_{50}$ and $LD_{50}$ Values Used for Laboratory-Specific Regressions ..... K-3**

**K2 $IC_{50}$ and $LD_{50}$ Values Used for Combined-Laboratory Regressions ..... K-17**

**K3 RC $IC_{50}$ and $LD_{50}$ Values for RC Substances with Rat Oral $LD_{50}$ Data ..... K-23**

**K4 Individual Laboratory $LD_{50}$ Predictions: RC Rat-Only Millimole Regression ..... K-33**

***[This Page Intentionally Left Blank]***

# Appendix K1

## $IC_{50}$ and $LD_{50}$ Values Used for Laboratory-Specific Regressions

***[This Page Intentionally Left Blank]***

## IC50 and LD50 Values Used for Laboratory-Specific Regressions

| NRU Test Method | Substance | Lab | Log $IC_{50}$ (mM)[1] | Log Reference $LD_{50}$ (mmol/kg)[2] | $IC_{50}$ (mM)[1] | Reference $LD_{50}$ (mmol/kg)[2] | Molecular Weight (g/mole) | $IC_{50}$ (µg/mL)[1] | Reference $LD_{50}$ (mg/kg)[2] |
|---|---|---|---|---|---|---|---|---|---|
| 3T3 | 1,1,1-Trichloroethane | ECBC | 2.489 | 1.957 | 308.185 | 90.534 | 133.410 | 41114.974 | 12078 |
| 3T3 | 1,1,1-Trichloroethane | FAL | 2.200 | 1.957 | 158.512 | 90.534 | 133.410 | 21147.061 | 12078 |
| 3T3 | 1,1,1-Trichloroethane | IIVS | 1.868 | 1.957 | 73.758 | 90.534 | 133.410 | 9840.111 | 12078 |
| 3T3 | 2-Propanol | ECBC | 1.637 | 1.929 | 43.328 | 84.928 | 60.110 | 2604.458 | 5105 |
| 3T3 | 2-Propanol | FAL | 1.820 | 1.929 | 66.019 | 84.928 | 60.110 | 3968.400 | 5105 |
| 3T3 | 2-Propanol | IIVS | 1.835 | 1.929 | 68.340 | 84.928 | 60.110 | 4107.888 | 5105 |
| 3T3 | 5-Aminosalicylic acid | ECBC | 0.979 | 1.350 | 9.529 | 22.391 | 153.100 | 1458.814 | 3428 |
| 3T3 | 5-Aminosalicylic acid | FAL | 1.127 | 1.350 | 13.387 | 22.391 | 153.100 | 2049.588 | 3428 |
| 3T3 | 5-Aminosalicylic acid | IIVS | 1.005 | 1.350 | 10.116 | 22.391 | 153.100 | 1548.817 | 3428 |
| 3T3 | Acetaminophen | ECBC | -0.577 | 1.155 | 0.265 | 14.299 | 151.200 | 40.087 | 2162 |
| 3T3 | Acetaminophen | FAL | -0.375 | 1.155 | 0.421 | 14.299 | 151.200 | 63.728 | 2162 |
| 3T3 | Acetaminophen | IIVS | -0.553 | 1.155 | 0.280 | 14.299 | 151.200 | 42.364 | 2162 |
| 3T3 | Acetonitrile | ECBC | 2.195 | 1.942 | 156.682 | 87.576 | 41.050 | 6431.812 | 3595 |
| 3T3 | Acetonitrile | FAL | 2.312 | 1.942 | 204.968 | 87.576 | 41.050 | 8413.951 | 3595 |
| 3T3 | Acetonitrile | IIVS | 2.355 | 1.942 | 226.301 | 87.576 | 41.050 | 9289.664 | 3595 |
| 3T3 | Acetylsalicylic acid | ECBC | 0.553 | 0.922 | 3.572 | 8.357 | 180.200 | 643.675 | 1506 |
| 3T3 | Acetylsalicylic acid | FAL | 0.827 | 0.922 | 6.708 | 8.357 | 180.200 | 1208.741 | 1506 |
| 3T3 | Acetylsalicylic acid | IIVS | 0.344 | 0.922 | 2.208 | 8.357 | 180.200 | 397.802 | 1506 |
| 3T3 | Aminopterin | ECBC | -4.926 | -1.799 | 0.000012 | 0.016 | 440.470 | 0.0052 | 7.00 |
| 3T3 | Aminopterin | FAL | -4.612 | -1.799 | 0.000024 | 0.016 | 440.470 | 0.011 | 7.00 |
| 3T3 | Aminopterin | IIVS | -4.980 | -1.799 | 0.000010 | 0.016 | 440.470 | 0.005 | 7.00 |
| 3T3 | Amitriptyline HCl | ECBC | -1.724 | 0.046 | 0.019 | 1.112 | 313.900 | 5.920 | 349 |
| 3T3 | Amitriptyline HCl | FAL | -1.611 | 0.046 | 0.024 | 1.112 | 313.900 | 7.681 | 349 |
| 3T3 | Amitriptyline HCl | IIVS | -1.609 | 0.046 | 0.025 | 1.112 | 313.900 | 7.719 | 349 |
| 3T3 | Arsenic III trioxide | ECBC | -1.937 | -0.897 | 0.012 | 0.127 | 197.840 | 2.285 | 25.1 |
| 3T3 | Arsenic III trioxide | FAL | -2.278 | -0.897 | 0.005 | 0.127 | 197.840 | 1.042 | 25.1 |
| 3T3 | Arsenic III trioxide | IIVS | -1.724 | -0.897 | 0.019 | 0.127 | 197.840 | 3.731 | 25.1 |
| 3T3 | Atropine sulfate | ECBC | -1.151 | 0.071 | 0.071 | 1.179 | 694.800 | 49.128 | 819 |
| 3T3 | Atropine sulfate | FAL | -0.734 | 0.071 | 0.184 | 1.179 | 694.800 | 128.135 | 819 |
| 3T3 | Atropine sulfate | IIVS | -0.998 | 0.071 | 0.100 | 1.179 | 694.800 | 69.823 | 819 |
| 3T3 | Boric acid | ECBC | 1.370 | 1.744 | 23.432 | 55.410 | 61.830 | 1448.772 | 3426 |
| 3T3 | Boric acid | FAL | 1.804 | 1.744 | 63.748 | 55.410 | 61.830 | 3941.547 | 3426 |
| 3T3 | Boric acid | IIVS | 1.254 | 1.744 | 17.939 | 55.410 | 61.830 | 1109.175 | 3426 |
| 3T3 | Busulfan | ECBC | -0.827 | -1.308 | 0.149 | 0.049 | 246.310 | 36.700 | 12.1 |
| 3T3 | Busulfan | FAL | 0.075 | -1.308 | 1.187 | 0.049 | 246.310 | 292.415 | 12.1 |
| 3T3 | Busulfan | IIVS | -0.751 | -1.308 | 0.177 | 0.049 | 246.310 | 43.685 | 12.1 |
| 3T3 | Cadmium II chloride | ECBC | -2.585 | -0.132 | 0.0026 | 0.738 | 183.300 | 0.477 | 135 |
| 3T3 | Cadmium II chloride | FAL | -2.675 | -0.132 | 0.0021 | 0.738 | 183.300 | 0.387 | 135 |
| 3T3 | Cadmium II chloride | IIVS | -2.387 | -0.132 | 0.0041 | 0.738 | 183.300 | 0.752 | 135 |

## IC50 and LD50 Values Used for Laboratory-Specific Regressions

| NRU Test Method | Substance | Lab | Log $IC_{50}$ (mM)[1] | Log Reference $LD_{50}$ (mmol/kg)[2] | $IC_{50}$ (mM)[1] | Reference $LD_{50}$ (mmol/kg)[2] | Molecular Weight (g/mole) | $IC_{50}$ (µg/mL)[1] | Reference $LD_{50}$ (mg/kg)[2] |
|---|---|---|---|---|---|---|---|---|---|
| 3T3 | Caffeine | ECBC | -0.165 | 0.203 | 0.684 | 1.596 | 194.200 | 132.841 | 310 |
| 3T3 | Caffeine | FAL | -0.143 | 0.203 | 0.720 | 1.596 | 194.200 | 139.744 | 310 |
| 3T3 | Caffeine | IIVS | -0.007 | 0.203 | 0.984 | 1.596 | 194.200 | 191.132 | 310 |
| 3T3 | Carbamazepine | ECBC | -0.457 | 1.075 | 0.349 | 11.879 | 236.300 | 82.414 | 2807 |
| 3T3 | Carbamazepine | FAL | -0.209 | 1.075 | 0.617 | 11.879 | 236.300 | 145.881 | 2807 |
| 3T3 | Carbamazepine | IIVS | -0.412 | 1.075 | 0.387 | 11.879 | 236.300 | 91.411 | 2807 |
| 3T3 | Chloral hydrate | ECBC | -0.041 | 0.586 | 0.910 | 3.857 | 165.400 | 150.545 | 638 |
| 3T3 | Chloral hydrate | FAL | 0.162 | 0.586 | 1.454 | 3.857 | 165.400 | 240.436 | 638 |
| 3T3 | Chloral hydrate | IIVS | 0.011 | 0.586 | 1.025 | 3.857 | 165.400 | 169.564 | 638 |
| 3T3 | Chloramphenicol | ECBC | -0.776 | 1.033 | 0.168 | 10.800 | 323.150 | 54.147 | 3490 |
| 3T3 | Chloramphenicol | FAL | -0.088 | 1.033 | 0.817 | 10.800 | 323.150 | 264.039 | 3490 |
| 3T3 | Chloramphenicol | IIVS | -0.321 | 1.033 | 0.478 | 10.800 | 323.150 | 154.402 | 3490 |
| 3T3 | Citric acid | ECBC | 0.378 | 1.489 | 2.389 | 30.864 | 192.100 | 458.846 | 5929 |
| 3T3 | Citric acid | FAL | 0.774 | 1.489 | 5.943 | 30.864 | 192.100 | 1141.563 | 5929 |
| 3T3 | Citric acid | IIVS | 0.648 | 1.489 | 4.444 | 30.864 | 192.100 | 853.755 | 5929 |
| 3T3 | Colchicine | ECBC | -4.292 | -1.425 | 0.000051 | 0.038 | 399.480 | 0.020 | 15.0 |
| 3T3 | Colchicine | FAL | -3.671 | -1.425 | 0.000213 | 0.038 | 399.480 | 0.085 | 15.0 |
| 3T3 | Colchicine | IIVS | -4.158 | -1.425 | 0.000070 | 0.038 | 399.480 | 0.028 | 15.0 |
| 3T3 | Cupric sulfate pentahydrate | ECBC | -0.480 | 0.279 | 0.331 | 1.902 | 249.700 | 82.667 | 475 |
| 3T3 | Cupric sulfate pentahydrate | FAL | -0.333 | 0.279 | 0.465 | 1.902 | 249.700 | 116.078 | 475 |
| 3T3 | Cupric sulfate pentahydrate | IIVS | -1.653 | 0.279 | 0.022 | 1.902 | 249.700 | 5.556 | 475 |
| 3T3 | Cycloheximide | ECBC | -3.384 | -2.148 | 0.00041 | 0.007 | 281.400 | 0.116 | 2.0 |
| 3T3 | Cycloheximide | FAL | -2.726 | -2.148 | 0.00188 | 0.007 | 281.400 | 0.529 | 2.0 |
| 3T3 | Cycloheximide | IIVS | -3.420 | -2.148 | 0.00038 | 0.007 | 281.400 | 0.107 | 2.0 |
| 3T3 | Dibutyl phthalate | ECBC | -1.079 | 1.504 | 0.083 | 31.951 | 278.300 | 23.227 | 8892 |
| 3T3 | Dibutyl phthalate | FAL | -0.214 | 1.504 | 0.611 | 31.951 | 278.300 | 169.922 | 8892 |
| 3T3 | Dibutyl phthalate | IIVS | -1.129 | 1.504 | 0.074 | 31.951 | 278.300 | 20.670 | 8892 |
| 3T3 | Dichlorvos | ECBC | -1.373 | -0.576 | 0.042 | 0.266 | 220.980 | 9.358 | 58.7 |
| 3T3 | Dichlorvos | FAL | -0.829 | -0.576 | 0.148 | 0.266 | 220.980 | 32.759 | 58.7 |
| 3T3 | Dichlorvos | IIVS | -1.084 | -0.576 | 0.082 | 0.266 | 220.980 | 18.225 | 58.7 |
| 3T3 | Diethyl phthalate | ECBC | -0.430 | 1.622 | 0.372 | 41.904 | 222.200 | 82.604 | 9311 |
| 3T3 | Diethyl phthalate | FAL | -0.191 | 1.622 | 0.644 | 41.904 | 222.200 | 143.109 | 9311 |
| 3T3 | Diethyl phthalate | IIVS | -0.328 | 1.622 | 0.470 | 41.904 | 222.200 | 104.472 | 9311 |
| 3T3 | Digoxin | ECBC | -0.373 | -1.441 | 0.424 | 0.036 | 780.900 | 330.877 | 28.3 |
| 3T3 | Digoxin | FAL | 0.039 | -1.441 | 1.093 | 0.036 | 780.900 | 853.755 | 28.3 |
| 3T3 | Digoxin | IIVS | -0.397 | -1.441 | 0.401 | 0.036 | 780.900 | 312.968 | 28.3 |
| 3T3 | Dimethylformamide | ECBC | 1.862 | 1.861 | 72.848 | 72.572 | 73.100 | 5325.168 | 5305 |
| 3T3 | Dimethylformamide | FAL | 1.874 | 1.861 | 74.774 | 72.572 | 73.100 | 5465.962 | 5305 |
| 3T3 | Dimethylformamide | IIVS | 1.826 | 1.861 | 67.001 | 72.572 | 73.100 | 4897.788 | 5305 |

## IC50 and LD50 Values Used for Laboratory-Specific Regressions

| NRU Test Method | Substance | Lab | Log $IC_{50}$ (mM)[1] | Log Reference $LD_{50}$ (mmol/kg)[2] | $IC_{50}$ (mM)[1] | Reference $LD_{50}$ (mmol/kg)[2] | Molecular Weight (g/mole) | $IC_{50}$ (µg/mL)[1] | Reference $LD_{50}$ (mg/kg)[2] |
|---|---|---|---|---|---|---|---|---|---|
| 3T3 | Diquat dibromide monohydra | ECBC | -1.978 | -0.355 | 0.011 | 0.442 | 362.100 | 3.811 | 160 |
| 3T3 | Diquat dibromide monohydra | FAL | -1.146 | -0.355 | 0.071 | 0.442 | 362.100 | 25.882 | 160 |
| 3T3 | Diquat dibromide monohydra | IIVS | -1.837 | -0.355 | 0.015 | 0.442 | 362.100 | 5.268 | 160 |
| 3T3 | Disulfoton | ECBC | -0.361 | -1.739 | 0.435 | 0.018 | 274.420 | 119.402 | 5.0 |
| 3T3 | Disulfoton | FAL | 1.611 | -1.739 | 40.796 | 0.018 | 274.420 | 11195.195 | 5.0 |
| 3T3 | Disulfoton | IIVS | -0.760 | -1.739 | 0.174 | 0.018 | 274.420 | 47.728 | 5.0 |
| 3T3 | Endosulfan | ECBC | -1.933 | -1.165 | 0.012 | 0.068 | 406.910 | 4.751 | 27.8 |
| 3T3 | Endosulfan | FAL | -1.511 | -1.165 | 0.031 | 0.068 | 406.910 | 12.554 | 27.8 |
| 3T3 | Endosulfan | IIVS | -2.076 | -1.165 | 0.008 | 0.068 | 406.910 | 3.416 | 27.8 |
| 3T3 | Epinephrine bitartrate | ECBC | -0.813 | -1.921 | 0.154 | 0.012 | 333.300 | 51.286 | 4.0 |
| 3T3 | Epinephrine bitartrate | FAL | -0.723 | -1.921 | 0.189 | 0.012 | 333.300 | 63.144 | 4.0 |
| 3T3 | Epinephrine bitartrate | IIVS | -0.721 | -1.921 | 0.190 | 0.012 | 333.300 | 63.338 | 4.0 |
| 3T3 | Ethanol | ECBC | 2.051 | 2.391 | 112.439 | 245.800 | 46.070 | 5180.043 | 11324 |
| 3T3 | Ethanol | FAL | 2.259 | 2.391 | 181.516 | 245.800 | 46.070 | 8362.446 | 11324 |
| 3T3 | Ethanol | IIVS | 2.143 | 2.391 | 139.075 | 245.800 | 46.070 | 6407.176 | 11324 |
| 3T3 | Ethylene glycol | ECBC | 2.469 | 2.062 | 294.295 | 115.351 | 62.080 | 18269.837 | 7161 |
| 3T3 | Ethylene glycol | FAL | 2.698 | 2.062 | 499.068 | 115.351 | 62.080 | 30982.150 | 7161 |
| 3T3 | Ethylene glycol | IIVS | 2.618 | 2.062 | 415.216 | 115.351 | 62.080 | 25776.589 | 7161 |
| 3T3 | Fenpropathrin | ECBC | -1.191 | -0.664 | 0.064 | 0.217 | 349.430 | 22.491 | 75.7 |
| 3T3 | Fenpropathrin | FAL | -1.012 | -0.664 | 0.097 | 0.217 | 349.430 | 33.982 | 75.7 |
| 3T3 | Fenpropathrin | IIVS | -1.322 | -0.664 | 0.048 | 0.217 | 349.430 | 16.647 | 75.7 |
| 3T3 | Gibberellic acid | ECBC | 1.363 | 1.241 | 23.074 | 17.436 | 346.380 | 7992.206 | 6039 |
| 3T3 | Gibberellic acid | IIVS | 1.343 | 1.241 | 22.035 | 17.436 | 346.380 | 7632.497 | 6039 |
| 3T3 | Glutethimide | ECBC | -0.115 | 0.441 | 0.767 | 2.761 | 217.300 | 166.725 | 600 |
| 3T3 | Glutethimide | FAL | 0.117 | 0.441 | 1.308 | 2.761 | 217.300 | 284.228 | 600 |
| 3T3 | Glutethimide | IIVS | -0.240 | 0.441 | 0.576 | 2.761 | 217.300 | 125.098 | 600 |
| 3T3 | Glycerol | ECBC | 2.334 | 2.332 | 215.835 | 214.681 | 92.090 | 19876.198 | 19770 |
| 3T3 | Glycerol | FAL | 2.477 | 2.332 | 299.942 | 214.681 | 92.090 | 27621.673 | 19770 |
| 3T3 | Glycerol | IIVS | 2.455 | 2.332 | 285.400 | 214.681 | 92.090 | 26282.499 | 19770 |
| 3T3 | Haloperidol | ECBC | -1.851 | -0.057 | 0.014 | 0.878 | 375.900 | 5.297 | 330 |
| 3T3 | Haloperidol | FAL | -1.673 | -0.057 | 0.021 | 0.878 | 375.900 | 7.977 | 330 |
| 3T3 | Haloperidol | IIVS | -1.840 | -0.057 | 0.014 | 0.878 | 375.900 | 5.440 | 330 |
| 3T3 | Hexachlorophene | ECBC | -1.939 | -0.696 | 0.012 | 0.202 | 406.910 | 4.684 | 82.0 |
| 3T3 | Hexachlorophene | FAL | -1.896 | -0.696 | 0.013 | 0.202 | 406.910 | 5.172 | 82.0 |
| 3T3 | Hexachlorophene | IIVS | -2.126 | -0.696 | 0.007 | 0.202 | 406.910 | 3.046 | 82.0 |
| 3T3 | Lactic acid | ECBC | 1.513 | 1.606 | 32.562 | 40.353 | 90.080 | 2933.144 | 3635 |
| 3T3 | Lactic acid | FAL | 1.584 | 1.606 | 38.374 | 40.353 | 90.080 | 3456.740 | 3635 |
| 3T3 | Lactic acid | IIVS | 1.490 | 1.606 | 30.882 | 40.353 | 90.080 | 2781.848 | 3635 |
| 3T3 | Lindane | ECBC | -0.496 | -0.464 | 0.319 | 0.344 | 290.800 | 92.754 | 100 |

## IC50 and LD50 Values Used for Laboratory-Specific Regressions

| NRU Test Method | Substance | Lab | Log $IC_{50}$ (mM)[1] | Log Reference $LD_{50}$ (mmol/kg)[2] | $IC_{50}$ (mM)[1] | Reference $LD_{50}$ (mmol/kg)[2] | Molecular Weight (g/mole) | $IC_{50}$ (µg/mL)[1] | Reference $LD_{50}$ (mg/kg)[2] |
|---|---|---|---|---|---|---|---|---|---|
| 3T3 | Lindane | FAL | -0.067 | -0.464 | 0.856 | 0.344 | 290.800 | 249.029 | 100 |
| 3T3 | Lindane | IIVS | -0.685 | -0.464 | 0.207 | 0.344 | 290.800 | 60.090 | 100 |
| 3T3 | Lithium I carbonate | ECBC | 0.881 | 0.902 | 7.601 | 7.985 | 73.890 | 561.606 | 590 |
| 3T3 | Meprobamate | ECBC | 0.207 | 0.803 | 1.609 | 6.353 | 218.300 | 351.291 | 1387 |
| 3T3 | Meprobamate | FAL | 0.600 | 0.803 | 3.981 | 6.353 | 218.300 | 868.960 | 1387 |
| 3T3 | Meprobamate | IIVS | 0.247 | 0.803 | 1.766 | 6.353 | 218.300 | 385.478 | 1387 |
| 3T3 | Mercury II chloride | ECBC | -1.897 | -0.830 | 0.013 | 0.148 | 271.500 | 3.446 | 40.2 |
| 3T3 | Mercury II chloride | FAL | -1.670 | -0.830 | 0.021 | 0.148 | 271.500 | 5.801 | 40.2 |
| 3T3 | Mercury II chloride | IIVS | -1.889 | -0.830 | 0.013 | 0.148 | 271.500 | 3.505 | 40.2 |
| 3T3 | Nicotine | ECBC | 0.216 | -0.367 | 1.643 | 0.430 | 162.200 | 266.481 | 69.7 |
| 3T3 | Nicotine | FAL | 0.386 | -0.367 | 2.430 | 0.430 | 162.200 | 394.155 | 69.7 |
| 3T3 | Nicotine | IIVS | 0.441 | -0.367 | 2.760 | 0.430 | 162.200 | 447.713 | 69.7 |
| 3T3 | Paraquat | ECBC | -1.103 | -0.443 | 0.079 | 0.360 | 257.200 | 20.308 | 92.7 |
| 3T3 | Paraquat | FAL | -1.109 | -0.443 | 0.078 | 0.360 | 257.200 | 19.991 | 92.7 |
| 3T3 | Paraquat | IIVS | -1.107 | -0.443 | 0.078 | 0.360 | 257.200 | 20.116 | 92.7 |
| 3T3 | Parathion | ECBC | -1.147 | -1.679 | 0.071 | 0.021 | 291.300 | 20.750 | 6.1 |
| 3T3 | Parathion | FAL | -0.398 | -1.679 | 0.400 | 0.021 | 291.300 | 116.413 | 6.1 |
| 3T3 | Parathion | IIVS | -1.128 | -1.679 | 0.074 | 0.021 | 291.300 | 21.695 | 6.1 |
| 3T3 | Phenobarbital | ECBC | 0.429 | -0.016 | 2.688 | 0.965 | 232.230 | 624.214 | 224.0 |
| 3T3 | Phenobarbital | FAL | 0.473 | -0.016 | 2.975 | 0.965 | 232.230 | 690.770 | 224.0 |
| 3T3 | Phenobarbital | IIVS | 0.303 | -0.016 | 2.011 | 0.965 | 232.230 | 466.928 | 224.0 |
| 3T3 | Phenol | ECBC | -0.280 | 0.908 | 0.524 | 8.097 | 94.110 | 49.355 | 762.0 |
| 3T3 | Phenol | FAL | 0.036 | 0.908 | 1.086 | 8.097 | 94.110 | 102.172 | 762.0 |
| 3T3 | Phenol | IIVS | -0.211 | 0.908 | 0.615 | 8.097 | 94.110 | 57.854 | 762.0 |
| 3T3 | Phenylthiourea | ECBC | -0.795 | -1.705 | 0.160 | 0.020 | 152.200 | 24.389 | 3.0 |
| 3T3 | Phenylthiourea | FAL | 0.183 | -1.705 | 1.523 | 0.020 | 152.200 | 231.739 | 3.0 |
| 3T3 | Phenylthiourea | IIVS | -0.242 | -1.705 | 0.573 | 0.020 | 152.200 | 87.163 | 3.0 |
| 3T3 | Physostigmine | ECBC | -1.038 | -1.741 | 0.092 | 0.018 | 275.400 | 25.235 | 5.0 |
| 3T3 | Physostigmine | FAL | -0.863 | -1.741 | 0.137 | 0.018 | 275.400 | 37.786 | 5.0 |
| 3T3 | Physostigmine | IIVS | -1.145 | -1.741 | 0.072 | 0.018 | 275.400 | 19.702 | 5.0 |
| 3T3 | Potassium cyanide | ECBC | -0.637 | -0.956 | 0.231 | 0.111 | 65.120 | 15.031 | 7.2 |
| 3T3 | Potassium cyanide | FAL | 0.353 | -0.956 | 2.254 | 0.111 | 65.120 | 146.780 | 7.2 |
| 3T3 | Potassium cyanide | IIVS | -0.538 | -0.956 | 0.289 | 0.111 | 65.120 | 18.851 | 7.2 |
| 3T3 | Potassium I chloride | ECBC | 1.650 | 1.575 | 44.667 | 37.586 | 74.550 | 3329.953 | 2802.0 |
| 3T3 | Potassium I chloride | FAL | 1.690 | 1.575 | 48.972 | 37.586 | 74.550 | 3650.893 | 2802.0 |
| 3T3 | Potassium I chloride | IIVS | 1.695 | 1.575 | 49.557 | 37.586 | 74.550 | 3694.501 | 2802.0 |
| 3T3 | Procainamide HCl | ECBC | 0.168 | 0.856 | 1.473 | 7.175 | 271.790 | 400.252 | 1950.0 |
| 3T3 | Procainamide HCl | FAL | 0.200 | 0.856 | 1.585 | 7.175 | 271.790 | 430.857 | 1950.0 |
| 3T3 | Procainamide HCl | IIVS | 0.261 | 0.856 | 1.826 | 7.175 | 271.790 | 496.211 | 1950.0 |

## IC50 and LD50 Values Used for Laboratory-Specific Regressions

| NRU Test Method | Substance | Lab | Log $IC_{50}$ (mM)[1] | Log Reference $LD_{50}$ (mmol/kg)[2] | $IC_{50}$ (mM)[1] | Reference $LD_{50}$ (mmol/kg)[2] | Molecular Weight (g/mole) | $IC_{50}$ (µg/mL)[1] | Reference $LD_{50}$ (mg/kg)[2] |
|---|---|---|---|---|---|---|---|---|---|
| 3T3 | Propranolol | ECBC | -1.354 | 0.197 | 0.044 | 1.575 | 295.840 | 13.089 | 466.0 |
| 3T3 | Propranolol | FAL | -1.378 | 0.197 | 0.042 | 1.575 | 295.840 | 12.377 | 466.0 |
| 3T3 | Propranolol | IIVS | -1.232 | 0.197 | 0.059 | 1.575 | 295.840 | 17.352 | 466.0 |
| 3T3 | Propylparaben | ECBC | -0.940 | 1.546 | 0.115 | 35.139 | 180.200 | 20.686 | 6332.0 |
| 3T3 | Propylparaben | FAL | -0.553 | 1.546 | 0.280 | 35.139 | 180.200 | 50.466 | 6332.0 |
| 3T3 | Propylparaben | IIVS | -1.026 | 1.546 | 0.094 | 35.139 | 180.200 | 16.982 | 6332.0 |
| 3T3 | Sodium arsenite | ECBC | -2.419 | -0.474 | 0.00381 | 0.336 | 129.900 | 0.495 | 43.6 |
| 3T3 | Sodium arsenite | FAL | -1.998 | -0.474 | 0.01005 | 0.336 | 129.900 | 1.305 | 43.6 |
| 3T3 | Sodium arsenite | IIVS | -2.284 | -0.474 | 0.00520 | 0.336 | 129.900 | 0.676 | 43.6 |
| 3T3 | Sodium chloride | ECBC | 1.913 | 1.841 | 81.901 | 69.302 | 58.440 | 4786.301 | 4050.0 |
| 3T3 | Sodium chloride | FAL | 1.896 | 1.841 | 78.621 | 69.302 | 58.440 | 4594.624 | 4050.0 |
| 3T3 | Sodium chloride | IIVS | 1.920 | 1.841 | 83.168 | 69.302 | 58.440 | 4860.340 | 4050.0 |
| 3T3 | Sodium dichromate dihydrate | ECBC | -2.697 | -0.771 | 0.00201 | 0.169 | 298.000 | 0.599 | 50.5 |
| 3T3 | Sodium dichromate dihydrate | FAL | -2.680 | -0.771 | 0.00209 | 0.169 | 298.000 | 0.622 | 50.5 |
| 3T3 | Sodium dichromate dihydrate | IIVS | -2.740 | -0.771 | 0.00182 | 0.169 | 298.000 | 0.542 | 50.5 |
| 3T3 | Sodium hypochlorite | ECBC | 1.041 | 2.142 | 10.995 | 138.737 | 74.440 | 818.465 | 10327.6 |
| 3T3 | Sodium hypochlorite | FAL | 0.996 | 2.142 | 9.898 | 138.737 | 74.440 | 736.772 | 10327.6 |
| 3T3 | Sodium hypochlorite | IIVS | 1.399 | 2.142 | 25.058 | 138.737 | 74.440 | 1865.306 | 10327.6 |
| 3T3 | Sodium oxalate | ECBC | -0.535 | 0.674 | 0.292 | 4.724 | 134.000 | 39.114 | 633.0 |
| 3T3 | Sodium oxalate | FAL | -0.649 | 0.674 | 0.224 | 4.724 | 134.000 | 30.061 | 633.0 |
| 3T3 | Sodium oxalate | IIVS | -0.488 | 0.674 | 0.325 | 4.724 | 134.000 | 43.576 | 633.0 |
| 3T3 | Sodium I fluoride | ECBC | 0.163 | 0.480 | 1.456 | 3.020 | 41.990 | 61.136 | 126.8 |
| 3T3 | Sodium I fluoride | FAL | 0.354 | 0.480 | 2.260 | 3.020 | 41.990 | 94.911 | 126.8 |
| 3T3 | Sodium I fluoride | IIVS | 0.290 | 0.480 | 1.950 | 3.020 | 41.990 | 81.860 | 126.8 |
| 3T3 | Sodium selenate | ECBC | -1.176 | -1.799 | 0.067 | 0.016 | 188.940 | 12.594 | 3.0 |
| 3T3 | Sodium selenate | FAL | -0.548 | -1.799 | 0.283 | 0.016 | 188.940 | 53.487 | 3.0 |
| 3T3 | Sodium selenate | IIVS | -0.717 | -1.799 | 0.192 | 0.016 | 188.940 | 36.291 | 3.0 |
| 3T3 | Strychnine | ECBC | 0.059 | -1.725 | 1.146 | 0.019 | 334.400 | 383.119 | 6.3 |
| 3T3 | Strychnine | FAL | -0.434 | -1.725 | 0.368 | 0.019 | 334.400 | 123.121 | 6.3 |
| 3T3 | Strychnine | IIVS | -0.603 | -1.725 | 0.249 | 0.019 | 334.400 | 83.432 | 6.3 |
| 3T3 | Thallium II sulfate | ECBC | -2.263 | -1.305 | 0.005 | 0.050 | 504.800 | 2.756 | 25.0 |
| 3T3 | Thallium II sulfate | FAL | -1.726 | -1.305 | 0.019 | 0.050 | 504.800 | 9.483 | 25.0 |
| 3T3 | Thallium II sulfate | IIVS | -1.916 | -1.305 | 0.012 | 0.050 | 504.800 | 6.124 | 25.0 |
| 3T3 | Trichloroacetic acid | ECBC | 0.666 | 1.282 | 4.639 | 19.137 | 163.400 | 757.996 | 3127.0 |
| 3T3 | Trichloroacetic acid | FAL | 0.872 | 1.282 | 7.443 | 19.137 | 163.400 | 1216.186 | 3127.0 |
| 3T3 | Trichloroacetic acid | IIVS | 0.687 | 1.282 | 4.869 | 19.137 | 163.400 | 795.548 | 3127.0 |
| 3T3 | Triethylenemelamine | ECBC | -3.378 | -1.708 | 0.000419 | 0.020 | 204.230 | 0.086 | 4.0 |
| 3T3 | Triethylenemelamine | FAL | -2.153 | -1.708 | 0.00703 | 0.020 | 204.230 | 1.436 | 4.0 |
| 3T3 | Triethylenemelamine | IIVS | -3.095 | -1.708 | 0.000804 | 0.020 | 204.230 | 0.164 | 4.0 |

## IC50 and LD50 Values Used for Laboratory-Specific Regressions

| NRU Test Method | Substance | Lab | Log $IC_{50}$ (mM)[1] | Log Reference $LD_{50}$ (mmol/kg)[2] | $IC_{50}$ (mM)[1] | Reference $LD_{50}$ (mmol/kg)[2] | Molecular Weight (g/mole) | $IC_{50}$ (µg/mL)[1] | Reference $LD_{50}$ (mg/kg)[2] |
|---|---|---|---|---|---|---|---|---|---|
| 3T3 | Triphenyltin hydroxide | ECBC | -4.161 | -0.047 | 0.000069 | 0.896 | 367.020 | 0.025 | 329.0 |
| 3T3 | Triphenyltin hydroxide | FAL | -4.366 | -0.047 | 0.000043 | 0.896 | 367.020 | 0.016 | 329.0 |
| 3T3 | Triphenyltin hydroxide | IIVS | -4.459 | -0.047 | 0.000035 | 0.896 | 367.020 | 0.013 | 329.0 |
| 3T3 | Valproic acid | ECBC | 0.577 | 0.839 | 3.776 | 6.907 | 144.200 | 544.503 | 996.0 |
| 3T3 | Valproic acid | FAL | 1.097 | 0.839 | 12.494 | 6.907 | 144.200 | 1801.634 | 996.0 |
| 3T3 | Valproic acid | IIVS | 0.600 | 0.839 | 3.981 | 6.907 | 144.200 | 574.116 | 996.0 |
| 3T3 | Verapamil HCl | ECBC | -1.188 | -0.646 | 0.065 | 0.226 | 491.080 | 31.842 | 111.0 |
| 3T3 | Verapamil HCl | FAL | -1.153 | -0.646 | 0.070 | 0.226 | 491.080 | 34.514 | 111.0 |
| 3T3 | Verapamil HCl | IIVS | -1.103 | -0.646 | 0.079 | 0.226 | 491.080 | 38.726 | 111.0 |
| 3T3 | Xylene | IIVS | 0.832 | 1.643 | 6.787 | 43.939 | 106.170 | 720.554 | 4665.0 |

## IC50 and LD50 Values Used for Laboratory-Specific Regressions

| NRU Test Method | Substance | Lab | Log $IC_{50}$ (mM)[1] | Log Reference $LD_{50}$ (mmol/kg)[2] | $IC_{50}$ (mM)[1] | Reference $LD_{50}$ (mmol/kg)[2] | Molecular Weight (g/mole) | $IC_{50}$ (µg/mL)[1] | Reference $LD_{50}$ (mg/kg)[2] |
|---|---|---|---|---|---|---|---|---|---|
| NHK | 1,1,1-Trichloroethane | ECBC | 1.784 | 1.957 | 60.881 | 90.534 | 133.410 | 8122.069 | 12078.1 |
| NHK | 2-Propanol | ECBC | 1.940 | 1.929 | 87.191 | 84.928 | 60.110 | 5241.038 | 5105.0 |
| NHK | 2-Propanol | FAL | 1.840 | 1.929 | 69.247 | 84.928 | 60.110 | 4162.458 | 5105.0 |
| NHK | 2-Propanol | IIVS | 2.071 | 1.929 | 117.715 | 84.928 | 60.110 | 7075.821 | 5105.0 |
| NHK | 5-Aminosalicylic acid | ECBC | -0.717 | 1.350 | 0.192 | 22.391 | 153.100 | 29.399 | 3428.0 |
| NHK | 5-Aminosalicylic acid | FAL | -0.330 | 1.350 | 0.468 | 22.391 | 153.100 | 71.669 | 3428.0 |
| NHK | 5-Aminosalicylic acid | IIVS | -0.501 | 1.350 | 0.316 | 22.391 | 153.100 | 48.343 | 3428.0 |
| NHK | Acetaminophen | ECBC | 0.564 | 1.155 | 3.663 | 14.299 | 151.200 | 553.775 | 2162.0 |
| NHK | Acetaminophen | FAL | 0.466 | 1.155 | 2.925 | 14.299 | 151.200 | 442.249 | 2162.0 |
| NHK | Acetaminophen | IIVS | 0.574 | 1.155 | 3.754 | 14.299 | 151.200 | 567.545 | 2162.0 |
| NHK | Acetonitrile | ECBC | 2.357 | 1.942 | 227.608 | 87.576 | 41.050 | 9343.293 | 3595.0 |
| NHK | Acetonitrile | FAL | 2.388 | 1.942 | 244.542 | 87.576 | 41.050 | 10038.450 | 3595.0 |
| NHK | Acetonitrile | IIVS | 2.354 | 1.942 | 226.128 | 87.576 | 41.050 | 9282.536 | 3595.0 |
| NHK | Acetylsalicylic acid | ECBC | 0.544 | 0.922 | 3.501 | 8.357 | 180.200 | 630.957 | 1506.0 |
| NHK | Acetylsalicylic acid | FAL | 0.583 | 0.922 | 3.827 | 8.357 | 180.200 | 689.710 | 1506.0 |
| NHK | Acetylsalicylic acid | IIVS | 0.452 | 0.922 | 2.831 | 8.357 | 180.200 | 510.113 | 1506.0 |
| NHK | Aminopterin | ECBC | 0.299 | -1.799 | 1.990 | 0.016 | 440.470 | 876.710 | 7.0 |
| NHK | Aminopterin | FAL | 0.091 | -1.799 | 1.234 | 0.016 | 440.470 | 543.604 | 7.0 |
| NHK | Aminopterin | IIVS | 0.141 | -1.799 | 1.383 | 0.016 | 440.470 | 608.951 | 7.0 |
| NHK | Amitriptyline HCl | ECBC | -1.480 | 0.046 | 0.033 | 1.112 | 313.900 | 10.402 | 349.0 |
| NHK | Amitriptyline HCl | FAL | -1.696 | 0.046 | 0.020 | 1.112 | 313.900 | 6.328 | 349.0 |
| NHK | Amitriptyline HCl | IIVS | -1.458 | 0.046 | 0.035 | 1.112 | 313.900 | 10.923 | 349.0 |
| NHK | Arsenic III trioxide | ECBC | -1.426 | -0.897 | 0.038 | 0.127 | 197.840 | 7.425 | 25.1 |
| NHK | Arsenic III trioxide | FAL | -1.968 | -0.897 | 0.011 | 0.127 | 197.840 | 2.132 | 25.1 |
| NHK | Arsenic III trioxide | IIVS | -0.991 | -0.897 | 0.102 | 0.127 | 197.840 | 20.216 | 25.1 |
| NHK | Atropine sulfate | ECBC | -0.912 | 0.071 | 0.122 | 1.179 | 694.800 | 85.049 | 819.0 |
| NHK | Atropine sulfate | FAL | -0.943 | 0.071 | 0.114 | 1.179 | 694.800 | 79.189 | 819.0 |
| NHK | Atropine sulfate | IIVS | -0.932 | 0.071 | 0.117 | 1.179 | 694.800 | 81.345 | 819.0 |
| NHK | Boric acid | ECBC | 0.839 | 1.744 | 6.899 | 55.410 | 61.830 | 426.580 | 3426.0 |
| NHK | Boric acid | FAL | 0.786 | 1.744 | 6.111 | 55.410 | 61.830 | 377.862 | 3426.0 |
| NHK | Boric acid | IIVS | 0.875 | 1.744 | 7.501 | 55.410 | 61.830 | 463.803 | 3426.0 |
| NHK | Busulfan | ECBC | 0.003 | -1.308 | 1.006 | 0.049 | 246.310 | 247.742 | 12.1 |
| NHK | Busulfan | FAL | -0.033 | -1.308 | 0.926 | 0.049 | 246.310 | 228.034 | 12.1 |
| NHK | Busulfan | IIVS | 0.102 | -1.308 | 1.265 | 0.049 | 246.310 | 311.650 | 12.1 |
| NHK | Cadmium II chloride | ECBC | -1.948 | -0.132 | 0.011 | 0.738 | 183.300 | 2.066 | 135.2 |
| NHK | Cadmium II chloride | FAL | -2.083 | -0.132 | 0.008 | 0.738 | 183.300 | 1.514 | 135.2 |
| NHK | Cadmium II chloride | IIVS | -1.995 | -0.132 | 0.010 | 0.738 | 183.300 | 1.856 | 135.2 |
| NHK | Caffeine | ECBC | 0.609 | 0.203 | 4.062 | 1.596 | 194.200 | 788.860 | 310.0 |
| NHK | Caffeine | FAL | 0.469 | 0.203 | 2.947 | 1.596 | 194.200 | 572.357 | 310.0 |

## IC50 and LD50 Values Used for Laboratory-Specific Regressions

| NRU Test Method | Substance | Lab | Log $IC_{50}$ (mM)[1] | Log Reference $LD_{50}$ (mmol/kg)[2] | $IC_{50}$ (mM)[1] | Reference $LD_{50}$ (mmol/kg)[2] | Molecular Weight (g/mole) | $IC_{50}$ (µg/mL)[1] | Reference $LD_{50}$ (mg/kg)[2] |
|---|---|---|---|---|---|---|---|---|---|
| NHK | Caffeine | IIVS | 0.471 | 0.203 | 2.956 | 1.596 | 194.200 | 574.116 | 310.0 |
| NHK | Carbamazepine | ECBC | -0.555 | 1.075 | 0.278 | 11.879 | 236.300 | 65.766 | 2807.0 |
| NHK | Carbamazepine | FAL | -0.235 | 1.075 | 0.582 | 11.879 | 236.300 | 137.615 | 2807.0 |
| NHK | Carbamazepine | IIVS | -0.569 | 1.075 | 0.270 | 11.879 | 236.300 | 63.728 | 2807.0 |
| NHK | Chloral hydrate | ECBC | -0.082 | 0.586 | 0.829 | 3.857 | 165.400 | 137.088 | 638.0 |
| NHK | Chloral hydrate | FAL | -0.031 | 0.586 | 0.931 | 3.857 | 165.400 | 153.934 | 638.0 |
| NHK | Chloral hydrate | IIVS | -0.169 | 0.586 | 0.677 | 3.857 | 165.400 | 112.030 | 638.0 |
| NHK | Chloramphenicol | ECBC | -0.033 | 1.033 | 0.927 | 10.800 | 323.150 | 299.663 | 3490.0 |
| NHK | Chloramphenicol | FAL | 0.070 | 1.033 | 1.175 | 10.800 | 323.150 | 379.588 | 3490.0 |
| NHK | Chloramphenicol | IIVS | 0.048 | 1.033 | 1.117 | 10.800 | 323.150 | 361.049 | 3490.0 |
| NHK | Citric acid | ECBC | 0.434 | 1.489 | 2.715 | 30.864 | 192.100 | 521.595 | 5929.0 |
| NHK | Citric acid | FAL | 0.206 | 1.489 | 1.608 | 30.864 | 192.100 | 308.852 | 5929.0 |
| NHK | Citric acid | IIVS | 0.352 | 1.489 | 2.250 | 30.864 | 192.100 | 432.182 | 5929.0 |
| NHK | Colchicine | ECBC | -4.918 | -1.425 | 0.0000121 | 0.038 | 399.480 | 0.005 | 15.0 |
| NHK | Colchicine | FAL | -4.720 | -1.425 | 0.0000190 | 0.038 | 399.480 | 0.008 | 15.0 |
| NHK | Colchicine | IIVS | -4.699 | -1.425 | 0.0000200 | 0.038 | 399.480 | 0.008 | 15.0 |
| NHK | Cupric sulfate pentahydrate | ECBC | -0.121 | 0.279 | 0.757 | 1.902 | 249.700 | 188.944 | 475.0 |
| NHK | Cupric sulfate pentahydrate | FAL | -0.109 | 0.279 | 0.778 | 1.902 | 249.700 | 194.387 | 475.0 |
| NHK | Cupric sulfate pentahydrate | IIVS | -0.082 | 0.279 | 0.828 | 1.902 | 249.700 | 206.697 | 475.0 |
| NHK | Cycloheximide | ECBC | -3.732 | -2.148 | 0.000185 | 0.007 | 281.400 | 0.052 | 2.0 |
| NHK | Cycloheximide | FAL | -3.418 | -2.148 | 0.000382 | 0.007 | 281.400 | 0.108 | 2.0 |
| NHK | Cycloheximide | IIVS | -3.601 | -2.148 | 0.000251 | 0.007 | 281.400 | 0.071 | 2.0 |
| NHK | Dibutyl phthalate | ECBC | -1.005 | 1.504 | 0.099 | 31.951 | 278.300 | 27.521 | 8892.0 |
| NHK | Dibutyl phthalate | FAL | -0.854 | 1.504 | 0.140 | 31.951 | 278.300 | 38.964 | 8892.0 |
| NHK | Dibutyl phthalate | IIVS | -1.102 | 1.504 | 0.079 | 31.951 | 278.300 | 22.012 | 8892.0 |
| NHK | Dichlorvos | ECBC | -1.423 | -0.576 | 0.038 | 0.266 | 220.980 | 8.348 | 58.7 |
| NHK | Dichlorvos | FAL | -1.265 | -0.576 | 0.054 | 0.266 | 220.980 | 11.991 | 58.7 |
| NHK | Dichlorvos | IIVS | -1.258 | -0.576 | 0.055 | 0.266 | 220.980 | 12.199 | 58.7 |
| NHK | Diethyl phthalate | ECBC | -0.108 | 1.622 | 0.779 | 41.904 | 222.200 | 173.114 | 9311.0 |
| NHK | Diethyl phthalate | FAL | -0.615 | 1.622 | 0.243 | 41.904 | 222.200 | 53.910 | 9311.0 |
| NHK | Diethyl phthalate | IIVS | -0.074 | 1.622 | 0.843 | 41.904 | 222.200 | 187.212 | 9311.0 |
| NHK | Digoxin | ECBC | -5.164 | -1.441 | 0.00000685 | 0.036 | 780.900 | 0.0053 | 28.3 |
| NHK | Digoxin | FAL | -7.209 | -1.441 | 0.00000006 | 0.036 | 780.900 | 0.000048 | 28.3 |
| NHK | Digoxin | IIVS | -5.293 | -1.441 | 0.00000509 | 0.036 | 780.900 | 0.0040 | 28.3 |
| NHK | Dimethylformamide | ECBC | 2.107 | 1.861 | 127.962 | 72.572 | 73.100 | 9354.057 | 5305.0 |
| NHK | Dimethylformamide | FAL | 2.029 | 1.861 | 106.926 | 72.572 | 73.100 | 7816.278 | 5305.0 |
| NHK | Dimethylformamide | IIVS | 1.942 | 1.861 | 87.448 | 72.572 | 73.100 | 6392.440 | 5305.0 |
| NHK | Diquat dibromide monohydra | ECBC | -2.012 | -0.355 | 0.010 | 0.442 | 362.100 | 3.525 | 160.0 |
| NHK | Diquat dibromide monohydra | FAL | -1.779 | -0.355 | 0.017 | 0.442 | 362.100 | 6.028 | 160.0 |

## IC50 and LD50 Values Used for Laboratory-Specific Regressions

| NRU Test Method | Substance | Lab | Log $IC_{50}$ (mM)[1] | Log Reference $LD_{50}$ (mmol/kg)[2] | $IC_{50}$ (mM)[1] | Reference $LD_{50}$ (mmol/kg)[2] | Molecular Weight (g/mole) | $IC_{50}$ (µg/mL)[1] | Reference $LD_{50}$ (mg/kg)[2] |
|---|---|---|---|---|---|---|---|---|---|
| NHK | Diquat dibromide monohydra | IIVS | -1.976 | -0.355 | 0.011 | 0.442 | 362.100 | 3.829 | 160.0 |
| NHK | Disulfoton | ECBC | -0.298 | -1.739 | 0.504 | 0.018 | 274.420 | 138.250 | 5.0 |
| NHK | Disulfoton | FAL | 0.458 | -1.739 | 2.872 | 0.018 | 274.420 | 788.255 | 5.0 |
| NHK | Disulfoton | IIVS | -0.182 | -1.739 | 0.657 | 0.018 | 274.420 | 180.302 | 5.0 |
| NHK | Endosulfan | ECBC | -2.077 | -1.165 | 0.0084 | 0.068 | 406.910 | 3.411 | 27.8 |
| NHK | Endosulfan | FAL | -2.493 | -1.165 | 0.0032 | 0.068 | 406.910 | 1.307 | 27.8 |
| NHK | Endosulfan | IIVS | -2.276 | -1.165 | 0.0053 | 0.068 | 406.910 | 2.157 | 27.8 |
| NHK | Epinephrine bitartrate | ECBC | -0.464 | -1.921 | 0.343 | 0.012 | 333.300 | 114.463 | 4.0 |
| NHK | Epinephrine bitartrate | FAL | -0.628 | -1.921 | 0.236 | 0.012 | 333.300 | 78.584 | 4.0 |
| NHK | Epinephrine bitartrate | IIVS | -0.652 | -1.921 | 0.223 | 0.012 | 333.300 | 74.245 | 4.0 |
| NHK | Ethanol | ECBC | 2.255 | 2.391 | 179.852 | 245.800 | 46.070 | 8285.779 | 11324.0 |
| NHK | Ethanol | FAL | 2.411 | 2.391 | 257.780 | 245.800 | 46.070 | 11875.904 | 11324.0 |
| NHK | Ethanol | IIVS | 2.346 | 2.391 | 221.776 | 245.800 | 46.070 | 10217.234 | 11324.0 |
| NHK | Ethylene glycol | ECBC | 2.785 | 2.062 | 609.021 | 115.351 | 62.080 | 37808.041 | 7161.0 |
| NHK | Ethylene glycol | FAL | 2.903 | 2.062 | 800.306 | 115.351 | 62.080 | 49683.006 | 7161.0 |
| NHK | Ethylene glycol | IIVS | 2.806 | 2.062 | 639.741 | 115.351 | 62.080 | 39715.137 | 7161.0 |
| NHK | Fenpropathrin | ECBC | -1.982 | -0.664 | 0.0104 | 0.217 | 349.430 | 3.645 | 75.7 |
| NHK | Fenpropathrin | FAL | -2.207 | -0.664 | 0.0062 | 0.217 | 349.430 | 2.171 | 75.7 |
| NHK | Fenpropathrin | IIVS | -2.287 | -0.664 | 0.0052 | 0.217 | 349.430 | 1.806 | 75.7 |
| NHK | Gibberellic acid | ECBC | 0.912 | 1.241 | 8.174 | 17.436 | 346.380 | 2831.392 | 6039.5 |
| NHK | Gibberellic acid | FAL | 0.927 | 1.241 | 8.461 | 17.436 | 346.380 | 2930.893 | 6039.5 |
| NHK | Gibberellic acid | IIVS | 0.909 | 1.241 | 8.106 | 17.436 | 346.380 | 2807.588 | 6039.5 |
| NHK | Glutethimide | ECBC | -0.087 | 0.441 | 0.819 | 2.761 | 217.300 | 177.964 | 600.0 |
| NHK | Glutethimide | FAL | -0.110 | 0.441 | 0.776 | 2.761 | 217.300 | 168.655 | 600.0 |
| NHK | Glutethimide | IIVS | -0.096 | 0.441 | 0.802 | 2.761 | 217.300 | 174.181 | 600.0 |
| NHK | Glycerol | ECBC | 2.542 | 2.332 | 348.180 | 214.681 | 92.090 | 32063.852 | 19770.0 |
| NHK | Glycerol | FAL | 2.250 | 2.332 | 177.877 | 214.681 | 92.090 | 16380.733 | 19770.0 |
| NHK | Glycerol | IIVS | 2.495 | 2.332 | 312.695 | 214.681 | 92.090 | 28796.077 | 19770.0 |
| NHK | Haloperidol | ECBC | -2.019 | -0.057 | 0.00958 | 0.878 | 375.900 | 3.601 | 330.0 |
| NHK | Haloperidol | FAL | -2.053 | -0.057 | 0.00886 | 0.878 | 375.900 | 3.329 | 330.0 |
| NHK | Haloperidol | IIVS | -2.076 | -0.057 | 0.00840 | 0.878 | 375.900 | 3.157 | 330.0 |
| NHK | Hexachlorophene | ECBC | -4.179 | -0.696 | 0.000066 | 0.202 | 406.910 | 0.027 | 82.0 |
| NHK | Hexachlorophene | FAL | -3.984 | -0.696 | 0.000104 | 0.202 | 406.910 | 0.042 | 82.0 |
| NHK | Hexachlorophene | IIVS | -4.285 | -0.696 | 0.000052 | 0.202 | 406.910 | 0.021 | 82.0 |
| NHK | Lactic acid | ECBC | 1.155 | 1.606 | 14.274 | 40.353 | 90.080 | 1285.822 | 3635.0 |
| NHK | Lactic acid | FAL | 1.166 | 1.606 | 14.646 | 40.353 | 90.080 | 1319.269 | 3635.0 |
| NHK | Lactic acid | IIVS | 1.162 | 1.606 | 14.511 | 40.353 | 90.080 | 1307.174 | 3635.0 |
| NHK | Lindane | ECBC | -1.188 | -0.464 | 0.065 | 0.344 | 290.800 | 18.880 | 100.0 |
| NHK | Lindane | FAL | -1.113 | -0.464 | 0.077 | 0.344 | 290.800 | 22.439 | 100.0 |

## IC50 and LD50 Values Used for Laboratory-Specific Regressions

| NRU Test Method | Substance | Lab | Log $IC_{50}$ (mM)[1] | Log Reference $LD_{50}$ (mmol/kg)[2] | $IC_{50}$ (mM)[1] | Reference $LD_{50}$ (mmol/kg)[2] | Molecular Weight (g/mole) | $IC_{50}$ (µg/mL)[1] | Reference $LD_{50}$ (mg/kg)[2] |
|---|---|---|---|---|---|---|---|---|---|
| NHK | Lindane | IIVS | -1.273 | -0.464 | 0.053 | 0.344 | 290.800 | 15.500 | 100.0 |
| NHK | Lithium I carbonate | ECBC | 0.733 | 0.902 | 5.413 | 7.985 | 73.890 | 399.969 | 590.0 |
| NHK | Lithium I carbonate | FAL | 0.812 | 0.902 | 6.482 | 7.985 | 73.890 | 478.918 | 590.0 |
| NHK | Lithium I carbonate | IIVS | 0.859 | 0.902 | 7.228 | 7.985 | 73.890 | 534.059 | 590.0 |
| NHK | Meprobamate | ECBC | 0.539 | 0.803 | 3.459 | 6.353 | 218.300 | 755.092 | 1386.8 |
| NHK | Meprobamate | FAL | -0.353 | 0.803 | 0.444 | 6.353 | 218.300 | 96.902 | 1386.8 |
| NHK | Meprobamate | IIVS | 0.454 | 0.803 | 2.842 | 6.353 | 218.300 | 620.393 | 1386.8 |
| NHK | Mercury II chloride | ECBC | -1.600 | -0.830 | 0.025 | 0.148 | 271.500 | 6.815 | 40.2 |
| NHK | Mercury II chloride | FAL | -1.706 | -0.830 | 0.020 | 0.148 | 271.500 | 5.339 | 40.2 |
| NHK | Mercury II chloride | IIVS | -1.705 | -0.830 | 0.020 | 0.148 | 271.500 | 5.352 | 40.2 |
| NHK | Methanol | FAL | 1.543 | 2.434 | 34.885 | 271.835 | 32.040 | 1117.721 | 8709.6 |
| NHK | Methanol | IIVS | 1.815 | 2.434 | 65.259 | 271.835 | 32.040 | 2090.900 | 8709.6 |
| NHK | Nicotine | ECBC | -0.246 | -0.367 | 0.568 | 0.430 | 162.200 | 92.116 | 69.7 |
| NHK | Nicotine | FAL | -0.129 | -0.367 | 0.742 | 0.430 | 162.200 | 120.411 | 69.7 |
| NHK | Nicotine | IIVS | -0.172 | -0.367 | 0.673 | 0.430 | 162.200 | 109.144 | 69.7 |
| NHK | Paraquat | ECBC | -0.729 | -0.443 | 0.187 | 0.360 | 257.200 | 48.010 | 92.7 |
| NHK | Paraquat | FAL | -0.449 | -0.443 | 0.356 | 0.360 | 257.200 | 91.482 | 92.7 |
| NHK | Paraquat | IIVS | -0.684 | -0.443 | 0.207 | 0.360 | 257.200 | 53.211 | 92.7 |
| NHK | Parathion | ECBC | -0.945 | -1.679 | 0.114 | 0.021 | 291.300 | 33.090 | 6.1 |
| NHK | Parathion | FAL | -0.993 | -1.679 | 0.102 | 0.021 | 291.300 | 29.582 | 6.1 |
| NHK | Parathion | IIVS | -1.012 | -1.679 | 0.097 | 0.021 | 291.300 | 28.316 | 6.1 |
| NHK | Phenobarbital | ECBC | 0.466 | -0.016 | 2.922 | 0.965 | 232.230 | 678.683 | 224.0 |
| NHK | Phenobarbital | FAL | 0.179 | -0.016 | 1.512 | 0.965 | 232.230 | 351.021 | 224.0 |
| NHK | Phenobarbital | IIVS | 0.210 | -0.016 | 1.622 | 0.965 | 232.230 | 376.704 | 224.0 |
| NHK | Phenol | ECBC | -0.224 | 0.908 | 0.598 | 8.097 | 94.110 | 56.234 | 762.0 |
| NHK | Phenol | FAL | -0.005 | 0.908 | 0.989 | 8.097 | 94.110 | 93.111 | 762.0 |
| NHK | Phenol | IIVS | -0.067 | 0.908 | 0.857 | 8.097 | 94.110 | 80.662 | 762.0 |
| NHK | Phenylthiourea | ECBC | 0.374 | -1.705 | 2.367 | 0.020 | 152.200 | 360.302 | 3.0 |
| NHK | Phenylthiourea | FAL | 0.415 | -1.705 | 2.600 | 0.020 | 152.200 | 395.670 | 3.0 |
| NHK | Phenylthiourea | IIVS | 0.244 | -1.705 | 1.754 | 0.020 | 152.200 | 266.891 | 3.0 |
| NHK | Physostigmine | ECBC | -0.226 | -1.741 | 0.594 | 0.018 | 275.400 | 163.682 | 5.0 |
| NHK | Physostigmine | FAL | -0.954 | -1.741 | 0.111 | 0.018 | 275.400 | 30.617 | 5.0 |
| NHK | Physostigmine | IIVS | -0.299 | -1.741 | 0.502 | 0.018 | 275.400 | 138.250 | 5.0 |
| NHK | Potassium cyanide | ECBC | -0.356 | -0.956 | 0.441 | 0.111 | 65.120 | 28.708 | 7.2 |
| NHK | Potassium cyanide | FAL | -0.112 | -0.956 | 0.773 | 0.111 | 65.120 | 50.350 | 7.2 |
| NHK | Potassium cyanide | IIVS | -0.589 | -0.956 | 0.258 | 0.111 | 65.120 | 16.788 | 7.2 |
| NHK | Potassium I chloride | ECBC | 1.531 | 1.575 | 33.999 | 37.586 | 74.550 | 2534.622 | 2802.0 |
| NHK | Potassium I chloride | FAL | 1.475 | 1.575 | 29.837 | 37.586 | 74.550 | 2224.317 | 2802.0 |
| NHK | Potassium I chloride | IIVS | 1.425 | 1.575 | 26.634 | 37.586 | 74.550 | 1985.553 | 2802.0 |

## IC50 and LD50 Values Used for Laboratory-Specific Regressions

| NRU Test Method | Substance | Lab | Log $IC_{50}$ (mM)[1] | Log Reference $LD_{50}$ (mmol/kg)[2] | $IC_{50}$ (mM)[1] | Reference $LD_{50}$ (mmol/kg)[2] | Molecular Weight (g/mole) | $IC_{50}$ (µg/mL)[1] | Reference $LD_{50}$ (mg/kg)[2] |
|---|---|---|---|---|---|---|---|---|---|
| NHK | Procainamide HCl | ECBC | 0.733 | 0.856 | 5.413 | 7.175 | 271.790 | 1471.183 | 1950.0 |
| NHK | Procainamide HCl | FAL | 0.816 | 0.856 | 6.543 | 7.175 | 271.790 | 1778.280 | 1950.0 |
| NHK | Procainamide HCl | IIVS | 0.871 | 0.856 | 7.426 | 7.175 | 271.790 | 2018.366 | 1950.0 |
| NHK | Propranolol | ECBC | -0.890 | 0.197 | 0.129 | 1.575 | 295.840 | 38.084 | 466.0 |
| NHK | Propranolol | FAL | -0.830 | 0.197 | 0.148 | 1.575 | 295.840 | 43.758 | 466.0 |
| NHK | Propranolol | IIVS | -1.017 | 0.197 | 0.096 | 1.575 | 295.840 | 28.465 | 466.0 |
| NHK | Propylparaben | ECBC | -1.000 | 1.546 | 0.100 | 35.139 | 180.200 | 18.016 | 6332.0 |
| NHK | Propylparaben | FAL | -0.991 | 1.546 | 0.102 | 35.139 | 180.200 | 18.394 | 6332.0 |
| NHK | Propylparaben | IIVS | -1.115 | 1.546 | 0.077 | 35.139 | 180.200 | 13.825 | 6332.0 |
| NHK | Sodium arsenite | ECBC | -2.231 | -0.474 | 0.0059 | 0.336 | 129.900 | 0.763 | 43.6 |
| NHK | Sodium arsenite | FAL | -2.631 | -0.474 | 0.0023 | 0.336 | 129.900 | 0.304 | 43.6 |
| NHK | Sodium arsenite | IIVS | -2.444 | -0.474 | 0.0036 | 0.336 | 129.900 | 0.467 | 43.6 |
| NHK | Sodium chloride | ECBC | 1.787 | 1.841 | 61.229 | 69.302 | 58.440 | 3578.217 | 4050.0 |
| NHK | Sodium chloride | FAL | 1.042 | 1.841 | 11.014 | 69.302 | 58.440 | 643.675 | 4050.0 |
| NHK | Sodium chloride | IIVS | 1.772 | 1.841 | 59.196 | 69.302 | 58.440 | 3459.394 | 4050.0 |
| NHK | Sodium dichromate dihydrate | ECBC | -2.583 | -0.771 | 0.0026 | 0.169 | 298.000 | 0.779 | 50.5 |
| NHK | Sodium dichromate dihydrate | FAL | -2.565 | -0.771 | 0.0027 | 0.169 | 298.000 | 0.811 | 50.5 |
| NHK | Sodium dichromate dihydrate | IIVS | -2.718 | -0.771 | 0.0019 | 0.169 | 298.000 | 0.571 | 50.5 |
| NHK | Sodium hypochlorite | ECBC | 1.384 | 2.142 | 24.203 | 138.737 | 74.440 | 1801.634 | 10327.6 |
| NHK | Sodium hypochlorite | FAL | 1.192 | 2.142 | 15.543 | 138.737 | 74.440 | 1157.000 | 10327.6 |
| NHK | Sodium hypochlorite | IIVS | 1.340 | 2.142 | 21.854 | 138.737 | 74.440 | 1626.797 | 10327.6 |
| NHK | Sodium oxalate | ECBC | 0.420 | 0.674 | 2.632 | 4.724 | 134.000 | 352.641 | 633.0 |
| NHK | Sodium oxalate | FAL | 0.373 | 0.674 | 2.360 | 4.724 | 134.000 | 316.228 | 633.0 |
| NHK | Sodium oxalate | IIVS | 0.418 | 0.674 | 2.616 | 4.724 | 134.000 | 350.483 | 633.0 |
| NHK | Sodium I fluoride | ECBC | 0.061 | 0.480 | 1.152 | 3.020 | 41.990 | 48.363 | 126.8 |
| NHK | Sodium I fluoride | FAL | 0.032 | 0.480 | 1.078 | 3.020 | 41.990 | 45.250 | 126.8 |
| NHK | Sodium I fluoride | IIVS | 0.105 | 0.480 | 1.272 | 3.020 | 41.990 | 53.423 | 126.8 |
| NHK | Sodium selenate | ECBC | -1.405 | -1.799 | 0.039 | 0.016 | 188.940 | 7.439 | 3.0 |
| NHK | Sodium selenate | FAL | -1.117 | -1.799 | 0.076 | 0.016 | 188.940 | 14.440 | 3.0 |
| NHK | Sodium selenate | IIVS | -1.279 | -1.799 | 0.053 | 0.016 | 188.940 | 9.935 | 3.0 |
| NHK | Strychnine | ECBC | -0.601 | -1.725 | 0.251 | 0.019 | 334.400 | 83.898 | 6.3 |
| NHK | Strychnine | FAL | -0.844 | -1.725 | 0.143 | 0.019 | 334.400 | 47.863 | 6.3 |
| NHK | Strychnine | IIVS | -0.784 | -1.725 | 0.164 | 0.019 | 334.400 | 54.996 | 6.3 |
| NHK | Thallium II sulfate | ECBC | -3.440 | -1.305 | 0.00036 | 0.050 | 504.800 | 0.183 | 25.0 |
| NHK | Thallium II sulfate | FAL | -3.525 | -1.305 | 0.00030 | 0.050 | 504.800 | 0.151 | 25.0 |
| NHK | Thallium II sulfate | IIVS | -3.602 | -1.305 | 0.00025 | 0.050 | 504.800 | 0.126 | 25.0 |
| NHK | Trichloroacetic acid | ECBC | 0.323 | 1.282 | 2.103 | 19.137 | 163.400 | 343.558 | 3127.0 |
| NHK | Trichloroacetic acid | FAL | 0.507 | 1.282 | 3.214 | 19.137 | 163.400 | 525.210 | 3127.0 |
| NHK | Trichloroacetic acid | IIVS | 0.379 | 1.282 | 2.394 | 19.137 | 163.400 | 391.141 | 3127.0 |

## IC50 and LD50 Values Used for Laboratory-Specific Regressions

| NRU Test Method | Substance | Lab | Log $IC_{50}$ (mM)[1] | Log Reference $LD_{50}$ (mmol/kg)[2] | $IC_{50}$ (mM)[1] | Reference $LD_{50}$ (mmol/kg)[2] | Molecular Weight (g/mole) | $IC_{50}$ (µg/mL)[1] | Reference $LD_{50}$ (mg/kg)[2] |
|---|---|---|---|---|---|---|---|---|---|
| NHK | Triethylenemelamine | ECBC | -2.126 | -1.708 | 0.0075 | 0.020 | 204.230 | 1.527 | 4.0 |
| NHK | Triethylenemelamine | FAL | -2.012 | -1.708 | 0.0097 | 0.020 | 204.230 | 1.986 | 4.0 |
| NHK | Triethylenemelamine | IIVS | -1.988 | -1.708 | 0.0103 | 0.020 | 204.230 | 2.097 | 4.0 |
| NHK | Triphenyltin hydroxide | ECBC | -4.250 | -0.047 | 0.000056 | 0.896 | 367.020 | 0.021 | 329.0 |
| NHK | Triphenyltin hydroxide | FAL | -4.885 | -0.047 | 0.000013 | 0.896 | 367.020 | 0.0048 | 329.0 |
| NHK | Triphenyltin hydroxide | IIVS | -4.552 | -0.047 | 0.000028 | 0.896 | 367.020 | 0.010 | 329.0 |
| NHK | Valproic acid | ECBC | 0.501 | 0.839 | 3.172 | 6.907 | 144.200 | 457.439 | 996.0 |
| NHK | Valproic acid | FAL | 0.679 | 0.839 | 4.779 | 6.907 | 144.200 | 689.181 | 996.0 |
| NHK | Valproic acid | IIVS | 0.470 | 0.839 | 2.954 | 6.907 | 144.200 | 425.925 | 996.0 |
| NHK | Verapamil HCl | ECBC | -0.917 | -0.646 | 0.121 | 0.226 | 491.080 | 59.384 | 111.0 |
| NHK | Verapamil HCl | FAL | -0.817 | -0.646 | 0.152 | 0.226 | 491.080 | 74.874 | 111.0 |
| NHK | Verapamil HCl | IIVS | -0.871 | -0.646 | 0.134 | 0.226 | 491.080 | 66.019 | 111.0 |
| NHK | Xylene | IIVS | 0.642 | 1.643 | 4.385 | 43.939 | 106.170 | 465.586 | 4665.0 |

Abbreviations: 3T3=Neutral red uptake with mouse fibroblast 3T3 cell line; NHK=Neutral red uptake with normal human epidermal keratinocytes; ECBC=US Army Chemical Biological Center; FAL=FRAME Alternatives Lab; IIVS=Institute for *In Vitro* Sciences.

[1] $IC_{50}$ values are the geometric mean $IC_{50}$ values for each substance in each lab.

[2] Reference rat oral $LD_{50}$ values from **Table 4-2**. Reference values were developed from rat acute oral $LD_{50}$ studies located using literature searches, secondary references, and electronic database searches.

# Appendix K2

## $IC_{50}$ and $LD_{50}$ Values Used for Combined-Laboratory Regressions

***[This Page Intentionally Left Blank]***

## IC50 and LD50 Values Used for Combined-Laboratory Regressions

| NRU Test Method | Substance | Log $IC_{50}$ (mM)[1] | Log Reference $LD_{50}$ (mmol/kg)[2] | Molecular Weight (g/mole) | $IC_{50}$ (mM)[1] | Reference $LD_{50}$ (mmol/kg)[2] | $IC_{50}$ (µg/mL)[1] | Reference $LD_{50}$ (mg/kg)[2] |
|---|---|---|---|---|---|---|---|---|
| 3T3 | 1,1,1-Trichloroethane | 2.186 | 1.957 | 133.41 | 153.307 | 90.534 | 20453 | 12078.1 |
| 3T3 | 2-Propanol | 1.764 | 1.929 | 60.11 | 58.037 | 84.928 | 3489 | 5105.0 |
| 3T3 | 5-Aminosalicylic Acid | 1.037 | 1.350 | 153.10 | 10.887 | 22.391 | 1667 | 3428.0 |
| 3T3 | Acetaminophen | -0.501 | 1.155 | 151.20 | 0.315 | 14.299 | 47.7 | 2162.0 |
| 3T3 | Acetonitrile | 2.287 | 1.942 | 41.05 | 193.701 | 87.576 | 7951 | 3595.0 |
| 3T3 | Acetylsalicylic Acid | 0.574 | 0.922 | 180.20 | 3.754 | 8.357 | 676 | 1506.0 |
| 3T3 | Aminopterin | -4.839 | -1.799 | 440.47 | 0.000 | 0.016 | 0.006 | 7.0 |
| 3T3 | Amitriptyline HCl | -1.648 | 0.046 | 313.90 | 0.022 | 1.112 | 7.05 | 349.0 |
| 3T3 | Arsenictrioxide | -1.980 | -0.897 | 197.84 | 0.010 | 0.127 | 2.07 | 25.1 |
| 3T3 | Atropine Sulfate | -0.961 | 0.071 | 694.80 | 0.109 | 1.179 | 76.0 | 819.0 |
| 3T3 | Boric Acid | 1.476 | 1.744 | 61.83 | 29.924 | 55.410 | 1850 | 3426.0 |
| 3T3 | Busulfan | -0.501 | -1.308 | 246.31 | 0.315 | 0.049 | 77.7 | 12.1 |
| 3T3 | Cadmium chloride | -2.549 | -0.132 | 183.30 | 0.003 | 0.738 | 0.518 | 135.2 |
| 3T3 | Caffeine | -0.105 | 0.203 | 194.20 | 0.785 | 1.596 | 153 | 310.0 |
| 3T3 | Carbamazepine | -0.360 | 1.075 | 236.30 | 0.437 | 11.879 | 103 | 2807.0 |
| 3T3 | Chloral Hydrate | 0.044 | 0.586 | 165.40 | 1.107 | 3.857 | 183 | 638.0 |
| 3T3 | Chloramphenicol | -0.395 | 1.033 | 323.15 | 0.403 | 10.800 | 130 | 3490.0 |
| 3T3 | Citric Acid | 0.600 | 1.489 | 192.10 | 3.981 | 30.864 | 765 | 5929.0 |
| 3T3 | Cupric Sulfate Pentahydrate | -0.822 | 0.279 | 249.70 | 0.151 | 1.902 | 37.6 | 475.0 |
| 3T3 | Cycloheximide | -3.177 | -2.148 | 281.40 | 0.001 | 0.007 | 0.187 | 2.0 |
| 3T3 | Dibutyl Phthalate | -0.807 | 1.504 | 278.30 | 0.156 | 31.951 | 43.4 | 8892.0 |
| 3T3 | Dichlorvos (DDVP) | -1.095 | -0.576 | 220.98 | 0.080 | 0.266 | 17.7 | 58.7 |
| 3T3 | Diethyl Phthalate | -0.316 | 1.622 | 222.20 | 0.483 | 41.904 | 107 | 9311.0 |
| 3T3 | Digoxin | -0.244 | -1.441 | 780.90 | 0.570 | 0.036 | 445 | 28.3 |
| 3T3 | Dimethylformamide | 1.854 | 1.861 | 73.10 | 71.463 | 72.572 | 5224 | 5305.0 |
| 3T3 | Diquat Dibromide Monohydrate | -1.654 | -0.355 | 362.10 | 0.022 | 0.442 | 8.04 | 160.0 |
| 3T3 | Disulfoton | 0.163 | -1.739 | 274.42 | 1.456 | 0.018 | 400 | 5.0 |
| 3T3 | Endosulfan | -1.840 | -1.165 | 406.91 | 0.014 | 0.068 | 5.88 | 27.8 |
| 3T3 | Ethanol | 2.151 | 2.391 | 46.07 | 141.588 | 245.800 | 6523 | 11324.0 |
| 3T3 | Ethyleneglycol | 2.595 | 2.062 | 62.08 | 393.615 | 115.351 | 24436 | 7161.0 |
| 3T3 | Fenpropathrin | -1.175 | -0.664 | 349.43 | 0.067 | 0.217 | 23.3 | 75.7 |
| 3T3 | Gibberellic Acid | 1.353 | 1.241 | 346.38 | 22.548 | 17.436 | 7810 | 6039.5 |
| 3T3 | Glutethimide | -0.079 | 0.441 | 217.30 | 0.833 | 2.761 | 181 | 600.0 |
| 3T3 | Glycerol | 2.422 | 2.332 | 92.09 | 264.365 | 214.681 | 24345 | 19770.0 |
| 3T3 | Haloperidol | -1.788 | -0.057 | 375.90 | 0.016 | 0.878 | 6.13 | 330.0 |
| 3T3 | Hexachlorophene | -1.987 | -0.696 | 406.91 | 0.010 | 0.202 | 4.19 | 82.0 |
| 3T3 | Lactic Acid | 1.529 | 1.606 | 90.08 | 33.792 | 40.353 | 3044 | 3635.0 |

## IC50 and LD50 Values Used for Combined-Laboratory Regressions

| NRU Test Method | Substance | Log $IC_{50}$ (mM)[1] | Log Reference $LD_{50}$ (mmol/kg)[2] | Molecular Weight (g/mole) | $IC_{50}$ (mM)[1] | Reference $LD_{50}$ (mmol/kg)[2] | $IC_{50}$ (µg/mL)[1] | Reference $LD_{50}$ (mg/kg)[2] |
|---|---|---|---|---|---|---|---|---|
| 3T3 | Lindane | -0.416 | -0.464 | 290.80 | 0.384 | 0.344 | 112 | 100.0 |
| 3T3 | Lithium carbonate | 0.881 | 0.902 | 73.89 | 7.601 | 7.985 | 562 | 590.0 |
| 3T3 | Meprobamate | 0.351 | 0.803 | 218.30 | 2.245 | 6.353 | 490 | 1386.8 |
| 3T3 | Mercury Chloride | -1.819 | -0.830 | 271.50 | 0.015 | 0.148 | 4.12 | 40.2 |
| 3T3 | Nicotine | 0.347 | -0.367 | 162.20 | 2.225 | 0.430 | 361 | 69.7 |
| 3T3 | Paraquat | -1.106 | -0.443 | 257.20 | 0.078 | 0.360 | 20.1 | 92.7 |
| 3T3 | Parathion | -0.891 | -1.679 | 291.30 | 0.128 | 0.021 | 37.4 | 6.1 |
| 3T3 | Phenobarbital | 0.402 | -0.016 | 232.23 | 2.524 | 0.965 | 586 | 224.0 |
| 3T3 | Phenol | -0.152 | 0.765 | 94.11 | 0.705 | 5.823 | 66.3 | 548.0 |
| 3T3 | Phenylthiourea | -0.285 | -1.705 | 152.20 | 0.519 | 0.020 | 79.0 | 3.0 |
| 3T3 | Physostigmine | -1.015 | -1.741 | 275.40 | 0.097 | 0.018 | 26.6 | 5.0 |
| 3T3 | Potassium Cyanide | -0.274 | -0.956 | 65.12 | 0.532 | 0.111 | 34.6 | 7.2 |
| 3T3 | Potassium chloride | 1.678 | 1.575 | 74.55 | 47.682 | 37.586 | 3555 | 2802.0 |
| 3T3 | Procainamide HCl | 0.210 | 0.856 | 271.79 | 1.621 | 7.175 | 441 | 1950.0 |
| 3T3 | Propranolol | -1.321 | 0.197 | 295.84 | 0.048 | 1.575 | 14.1 | 466.0 |
| 3T3 | Sodium Arsenite | -2.234 | -0.474 | 129.90 | 0.006 | 0.336 | 0.759 | 43.6 |
| 3T3 | Sodium Chloride | 1.910 | 1.841 | 58.44 | 81.207 | 69.302 | 4746 | 4050.0 |
| 3T3 | Sodium Dichromate Dihydrate | -2.706 | -0.771 | 298.00 | 0.002 | 0.169 | 0.587 | 50.5 |
| 3T3 | Sodium Hypochlorite | 1.145 | 2.142 | 74.44 | 13.971 | 138.737 | 1040 | 10327.6 |
| 3T3 | Sodium Oxalate | -0.557 | 0.674 | 134.00 | 0.277 | 4.724 | 37.1 | 633.0 |
| 3T3 | Sodium fluoride | 0.269 | 0.480 | 41.99 | 1.858 | 3.020 | 78.0 | 126.8 |
| 3T3 | Sodium selenate | -0.814 | -1.799 | 188.94 | 0.154 | 0.016 | 29.0 | 3.0 |
| 3T3 | Strychnine | -0.326 | -1.725 | 334.40 | 0.472 | 0.019 | 158 | 6.3 |
| 3T3 | Thallium Sulfate | -1.968 | -1.305 | 504.80 | 0.011 | 0.050 | 5.43 | 25.0 |
| 3T3 | Trichloroacetic Acid | 0.742 | 1.505 | 163.40 | 5.519 | 32.001 | 902 | 5229.0 |
| 3T3 | Triethylenemelamine | -2.875 | -1.708 | 204.23 | 0.001 | 0.020 | 0.272 | 4.0 |
| 3T3 | Triphenyltin Hydroxide | -4.329 | -0.047 | 367.02 | 0.000 | 0.896 | 0.017 | 329.0 |
| 3T3 | Valproic Acid | 0.758 | 0.839 | 144.20 | 5.727 | 6.907 | 826 | 996.0 |
| 3T3 | Verapamil HCl | -1.148 | -0.646 | 491.08 | 0.071 | 0.226 | 34.9 | 111.0 |
| 3T3 | Xylene | 0.832 | 1.643 | 106.17 | 6.787 | 43.939 | 721 | 4665.0 |

## IC50 and LD50 Values Used for Combined-Laboratory Regressions

| NRU Test Method | Substance | Log $IC_{50}$ (mM)[1] | Log Reference $LD_{50}$ (mmol/kg)[2] | Molecular Weight (g/mole) | $IC_{50}$ (mM)[1] | Reference $LD_{50}$ (mmol/kg)[2] | $IC_{50}$ (µg/mL)[1] | Reference $LD_{50}$ (mg/kg)[2] |
|---|---|---|---|---|---|---|---|---|
| NHK | 1,1,1-Trichloroethane | 1.784 | 1.957 | 133.41 | 60.881 | 90.534 | 8122 | 12078.1 |
| NHK | 2-Propanol | 1.951 | 1.929 | 60.11 | 89.242 | 84.928 | 5364 | 5105.0 |
| NHK | 5-Aminosalicylic Acid | -0.516 | 1.350 | 153.10 | 0.305 | 22.391 | 46.7 | 3428.0 |
| NHK | Acetaminophen | 0.535 | 1.155 | 151.20 | 3.426 | 14.299 | 518 | 2162.0 |
| NHK | Acetonitrile | 2.367 | 1.942 | 41.05 | 232.612 | 87.576 | 9549 | 3595.0 |
| NHK | Acetylsalicylic Acid | 0.526 | 0.922 | 180.20 | 3.360 | 8.357 | 605 | 1506.0 |
| NHK | Aminopterin | 0.177 | -1.799 | 440.47 | 1.503 | 0.016 | 662 | 7.0 |
| NHK | Amitriptyline HCl | -1.545 | 0.046 | 313.90 | 0.029 | 1.112 | 8.96 | 349.0 |
| NHK | Arsenictrioxide | -1.461 | -0.897 | 197.84 | 0.035 | 0.127 | 6.84 | 25.1 |
| NHK | Atropine Sulfate | -0.929 | 0.071 | 694.80 | 0.118 | 1.179 | 81.8 | 819.0 |
| NHK | Boric Acid | 0.833 | 1.744 | 61.83 | 6.813 | 55.410 | 421 | 3426.0 |
| NHK | Busulfan | 0.024 | -1.308 | 246.31 | 1.056 | 0.049 | 260 | 12.1 |
| NHK | Cadmium chloride | -2.009 | -0.132 | 183.30 | 0.010 | 0.738 | 1.80 | 135.2 |
| NHK | Caffeine | 0.516 | 0.203 | 194.20 | 3.283 | 1.596 | 638 | 310.0 |
| NHK | Carbamazepine | -0.453 | 1.075 | 236.30 | 0.352 | 11.879 | 83.2 | 2807.0 |
| NHK | Chloral Hydrate | -0.094 | 0.586 | 165.40 | 0.805 | 3.857 | 133 | 638.0 |
| NHK | Chloramphenicol | 0.028 | 1.033 | 323.15 | 1.068 | 10.800 | 345 | 3490.0 |
| NHK | Citric Acid | 0.331 | 1.489 | 192.10 | 2.142 | 30.864 | 411 | 5929.0 |
| NHK | Cupric Sulfate Pentahydrate | -0.104 | 0.279 | 249.70 | 0.787 | 1.902 | 197 | 475.0 |
| NHK | Cycloheximide | -3.584 | -2.148 | 281.40 | 0.000 | 0.007 | 0.073 | 2.0 |
| NHK | Dibutyl Phthalate | -0.987 | 1.504 | 278.30 | 0.103 | 31.951 | 28.7 | 8892.0 |
| NHK | Dichlorvos (DDVP) | -1.315 | -0.576 | 220.98 | 0.048 | 0.266 | 10.7 | 58.7 |
| NHK | Diethyl Phthalate | -0.266 | 1.622 | 222.20 | 0.542 | 41.904 | 120 | 9311.0 |
| NHK | Digoxin | -5.889 | -1.441 | 780.90 | 0.000 | 0.036 | 0.001 | 28.3 |
| NHK | Dimethylformamide | 2.026 | 1.861 | 73.10 | 106.163 | 72.572 | 7760 | 5305.0 |
| NHK | Diquat Dibromide Monohydrate | -1.922 | -0.355 | 362.10 | 0.012 | 0.442 | 4.33 | 160.0 |
| NHK | Disulfoton | -0.007 | -1.739 | 274.42 | 0.983 | 0.018 | 270 | 5.0 |
| NHK | Endosulfan | -2.282 | -1.165 | 406.91 | 0.005 | 0.068 | 2.13 | 27.8 |
| NHK | Ethanol | 2.337 | 2.391 | 46.07 | 217.450 | 245.800 | 10018 | 11324.0 |
| NHK | Ethyleneglycol | 2.831 | 2.062 | 62.08 | 678.106 | 115.351 | 42097 | 7161.0 |
| NHK | Fenpropathrin | -2.158 | -0.664 | 349.43 | 0.007 | 0.217 | 2.43 | 75.7 |
| NHK | Gibberellic Acid | 0.916 | 1.241 | 346.38 | 8.246 | 17.436 | 2856 | 6039.5 |
| NHK | Glutethimide | -0.098 | 0.441 | 217.30 | 0.799 | 2.761 | 174 | 600.0 |
| NHK | Glycerol | 2.429 | 2.332 | 92.09 | 268.544 | 214.681 | 24730 | 19770.0 |
| NHK | Haloperidol | -2.049 | -0.057 | 375.90 | 0.009 | 0.878 | 3.36 | 330.0 |
| NHK | Hexachlorophene | -4.149 | -0.696 | 406.91 | 0.000 | 0.202 | 0.029 | 82.0 |
| NHK | Lactic Acid | 1.161 | 1.606 | 90.08 | 14.476 | 40.353 | 1304 | 3635.0 |

## IC50 and LD50 Values Used for Combined-Laboratory Regressions

| NRU Test Method | Substance | Log $IC_{50}$ (mM)[1] | Log Reference $LD_{50}$ (mmol/kg)[2] | Molecular Weight (g/mole) | $IC_{50}$ (mM)[1] | Reference $LD_{50}$ (mmol/kg)[2] | $IC_{50}$ (µg/mL)[1] | Reference $LD_{50}$ (mg/kg)[2] |
|---|---|---|---|---|---|---|---|---|
| NHK | Lindane | -1.191 | -0.464 | 290.80 | 0.064 | 0.344 | 18.7 | 100.0 |
| NHK | Lithium carbonate | 0.801 | 0.902 | 73.89 | 6.330 | 7.985 | 468 | 590.0 |
| NHK | Meprobamate | 0.213 | 0.803 | 218.30 | 1.634 | 6.353 | 357 | 1386.8 |
| NHK | Mercury Chloride | -1.671 | -0.830 | 271.50 | 0.021 | 0.148 | 5.80 | 40.2 |
| NHK | Methanol | 1.679 | 2.434 | 32.04 | 47.713 | 271.835 | 1529 | 8709.6 |
| NHK | Nicotine | -0.182 | -0.367 | 162.20 | 0.657 | 0.430 | 107 | 69.7 |
| NHK | Paraquat | -0.621 | -0.443 | 257.20 | 0.239 | 0.360 | 61.6 | 92.7 |
| NHK | Parathion | -0.983 | -1.679 | 291.30 | 0.104 | 0.021 | 30.3 | 6.1 |
| NHK | Phenobarbital | 0.285 | -0.016 | 232.23 | 1.928 | 0.965 | 448 | 224.0 |
| NHK | Phenol | -0.098 | 0.765 | 94.11 | 0.797 | 5.823 | 75.0 | 548.0 |
| NHK | Phenylthiourea | 0.344 | -1.705 | 152.20 | 2.210 | 0.020 | 336 | 3.0 |
| NHK | Physostigmine | -0.493 | -1.741 | 275.40 | 0.321 | 0.018 | 88.5 | 5.0 |
| NHK | Potassium Cyanide | -0.352 | -0.956 | 65.12 | 0.445 | 0.111 | 29.0 | 7.2 |
| NHK | Potassium chloride | 1.477 | 1.575 | 74.55 | 30.007 | 37.586 | 2237 | 2802.0 |
| NHK | Procainamide HCl | 0.807 | 0.856 | 271.79 | 6.407 | 7.175 | 1741 | 1950.0 |
| NHK | Propranolol | -0.912 | 0.197 | 295.84 | 0.122 | 1.575 | 36.2 | 466.0 |
| NHK | Sodium Arsenite | -2.435 | -0.474 | 129.90 | 0.004 | 0.336 | 0.477 | 43.6 |
| NHK | Sodium Chloride | 1.534 | 1.841 | 58.44 | 34.177 | 69.302 | 1997 | 4050.0 |
| NHK | Sodium Dichromate Dihydrate | -2.622 | -0.771 | 298.00 | 0.002 | 0.169 | 0.712 | 50.5 |
| NHK | Sodium Hypochlorite | 1.305 | 2.142 | 74.44 | 20.182 | 138.737 | 1502 | 10327.6 |
| NHK | Sodium Oxalate | 0.404 | 0.674 | 134.00 | 2.533 | 4.724 | 339 | 633.0 |
| NHK | Sodium fluoride | 0.066 | 0.480 | 41.99 | 1.165 | 3.020 | 48.9 | 126.8 |
| NHK | Sodium selenate | -1.267 | -1.799 | 188.94 | 0.054 | 0.016 | 10.2 | 3.0 |
| NHK | Strychnine | -0.743 | -1.725 | 334.40 | 0.181 | 0.019 | 60.4 | 6.3 |
| NHK | Thallium Sulfate | -3.522 | -1.305 | 504.80 | 0.000 | 0.050 | 0.152 | 25.0 |
| NHK | Trichloroacetic Acid | 0.403 | 1.505 | 163.40 | 2.529 | 32.001 | 413 | 5229.0 |
| NHK | Triethylenemelamine | -2.042 | -1.708 | 204.23 | 0.009 | 0.020 | 1.85 | 4.0 |
| NHK | Triphenyltin Hydroxide | -4.562 | -0.047 | 367.02 | 0.000 | 0.896 | 0.010 | 329.0 |
| NHK | Valproic Acid | 0.550 | 0.839 | 144.20 | 3.551 | 6.907 | 512 | 996.0 |
| NHK | Verapamil HCl | -0.869 | -0.646 | 491.08 | 0.135 | 0.226 | 66.5 | 111.0 |
| NHK | Xylene | 0.642 | 1.643 | 106.17 | 4.385 | 43.939 | 466 | 4665.0 |

Abbreviations: 3T3=Neutral red uptake with mouse fibroblast 3T3 cell line; NHK=Neutral red uptake with normal human epidermal keratinocytes; ECBC=US Army Chemical Biological Center; FAL=FRAME Alternatives Lab; IIVS=Institute for *In Vitro* Sciences.

[1]$IC_{50}$ values are the geometric mean $IC_{50}$ values for each substance in each lab.

[2]Reference rat oral $LD_{50}$ values from **Table 4-2**. Reference values were developed from rat acute oral $LD_{50}$ studies located using literature searches, secondary references, and electronic database searches.

# Appendix K3

## RC $IC_{50}$ and $LD_{50}$ Values for RC Substances with Rat Oral $LD_{50}$ Data

***[This Page Intentionally Left Blank]***

## RC $IC_{50}$ and $LD_{50}$ Values for RC Substances with Rat Oral $LD_{50}$ Data

| Substance | Molecular Weight (g/mole) | $IC_{50x}$ (mM)[1] | $IC_{50x}$ (mg/mL)[1] | Rat Oral $LD_{50}$ (mmol/kg)[2] | Rat Oral $LD_{50}$ (mg/kg)[2] |
|---|---|---|---|---|---|
| Formaldehyde | 30.03 | 0.12 | 3.60 | 26.6 | 798.8 |
| Methanol | 32.05 | 930 | 29806.5 | 406 | 13012.3 |
| Acetonitrile | 41.06 | 368 | 15110.1 | 92.5 | 3798.1 |
| Sodium I fluoride | 41.99 | 1.85 | 77.68 | 4.29 | 180.1 |
| Lithium I chloride | 42.39 | 38.6 | 1636.3 | 17.9 | 758.8 |
| Acetaldehyde | 44.06 | 2.45 | 107.95 | 43.8 | 1929.8 |
| Ethanol | 46.08 | 379 | 17464.3 | 304 | 14008.3 |
| Ammonium sulfide | 51.12 | 0.42 | 21.47 | 3.29 | 168.2 |
| Acrylonitrile | 53.07 | 2.42 | 128.43 | 1.54 | 81.7 |
| Ammonium chloride | 53.5 | 5.52 | 295.32 | 30.8 | 1647.8 |
| Acrolein | 56.07 | 0.047 | 2.64 | 0.82 | 46.0 |
| Propionaldehyde | 58.09 | 3.25 | 188.79 | 24.3 | 1411.6 |
| Allylalcohol | 58.09 | 6.94 | 403.14 | 1.1 | 63.9 |
| Acetone | 58.09 | 444 | 25792.0 | 168 | 9759.1 |
| Potassium I fluoride | 58.1 | 3.13 | 181.85 | 4.22 | 245.2 |
| Sodium chloride | 58.44 | 75.9 | 4435.6 | 51.3 | 2998.0 |
| Acetic acid | 60.06 | 24.3 | 1459.5 | 55.1 | 3309.3 |
| 1-Propanol | 60.11 | 96.5 | 5800.6 | 89.8 | 5397.9 |
| 2-Propanol | 60.11 | 167 | 10038.4 | 97.2 | 5842.7 |
| Ethylene glycol | 62.08 | 555 | 34454.4 | 138 | 8567.0 |
| Sodium azide | 65.02 | 0.71 | 46.16 | 0.69 | 44.9 |
| Potassium cyanide | 65.12 | 1.12 | 72.93 | 0.15 | 9.8 |
| Acrylamide | 71.09 | 1.61 | 114.45 | 2.39 | 169.9 |
| n-Butanal | 72.12 | 12.8 | 923.1 | 34.5 | 2488.1 |
| Isobutanal | 72.12 | 13.5 | 973.62 | 39 | 2812.7 |
| Ethyl methyl ketone | 72.12 | 104 | 7500.5 | 47.1 | 3396.9 |
| Dimethylformamide | 73.11 | 114 | 8334.5 | 38.3 | 2800.1 |
| Isobutanol | 74.14 | 40.1 | 2973.0 | 33.2 | 2461.4 |
| 1-Butanol | 74.14 | 52.5 | 3892.4 | 10.7 | 793.3 |
| Potassium I chloride | 74.55 | 82 | 6113.1 | 34.9 | 2601.8 |
| Thioacetamide | 75.14 | 4.17 | 313.33 | 4.01 | 301.3 |
| 2-Methoxyethanol | 76.11 | 251 | 19103.6 | 32.3 | 2458.4 |
| Propylene glycol | 76.11 | 342 | 26029.6 | 263 | 20016.9 |
| Thiourea | 76.13 | 86 | 6547.2 | 1.64 | 124.9 |
| Dimethyl sulfoxide | 78.14 | 252 | 19691.3 | 252 | 19691.3 |
| Pyridine | 79.11 | 46.9 | 3710.3 | 11.3 | 893.9 |
| Dichloromethane | 84.93 | 34.9 | 2964.1 | 18.8 | 1596.7 |
| Piperazine | 86.16 | 67.2 | 5790.0 | 22.1 | 1904.1 |
| N,N-Dimethylacetamide | 87.14 | 24.2 | 2108.8 | 58.4 | 5089.0 |
| 1,4-Dioxane | 88.12 | 38.1 | 3357.4 | 47.7 | 4203.3 |

## RC $IC_{50}$ and $LD_{50}$ Values for RC Substances with Rat Oral $LD_{50}$ Data

| Substance | Molecular Weight (g/mole) | $IC_{50x}$ (mM)[1] | $IC_{50x}$ (mg/mL)[1] | Rat Oral $LD_{50}$ (mmol/kg)[2] | Rat Oral $LD_{50}$ (mg/kg)[2] |
|---|---|---|---|---|---|
| Ethyl acetate | 88.12 | 128 | 11279.4 | 125 | 11015.0 |
| 1-Pentanol | 88.17 | 24.9 | 2195.4 | 34.4 | 3033.0 |
| 1-Nitropropane | 89.11 | 57.9 | 5159.5 | 5.11 | 455.4 |
| Lactic acid | 90.09 | 66 | 5945.9 | 41.4 | 3729.7 |
| 1,3,5-Trioxane | 90.09 | 213 | 19189.2 | 8.88 | 800.0 |
| Glycerol | 92.11 | 624 | 57476.6 | 137 | 12619.1 |
| Toluene | 92.15 | 17.1 | 1575.8 | 54.3 | 5003.7 |
| Aniline | 93.14 | 6.9 | 642.67 | 4.72 | 439.6 |
| Phenol | 94.12 | 3.01 | 283.30 | 4.4 | 414.1 |
| Sulfuric acid | 98.08 | 36 | 3530.9 | 21.8 | 2138.1 |
| Chromium VI trioxide | 100 | 0.0027 | 0.27 | 0.8 | 80.0 |
| 2-Ethylbutanal | 100.18 | 13.2 | 1322.4 | 39.7 | 3977.1 |
| Cyclohexanol | 100.18 | 26.3 | 2634.7 | 20.6 | 2063.7 |
| Tetrahydrofurfuryl alcohol | 102.15 | 111 | 11338.7 | 24.5 | 2502.7 |
| 1-Hexanol | 102.2 | 15.4 | 1573.9 | 7.04 | 719.5 |
| Styrene | 104.16 | 3.3 | 343.73 | 48 | 4999.7 |
| Sodium I bromide | 104.92 | 77.4 | 8120.8 | 33.4 | 3504.3 |
| Beryllium II sulfate | 105.07 | 0.61 | 64.09 | 0.78 | 82.0 |
| Diethylene glycol | 106.14 | 62.1 | 6591.3 | 139 | 14753.5 |
| Xylene | 106.18 | 12 | 1274.2 | 40.5 | 4300.3 |
| p-Cresol | 108.15 | 0.22 | 23.79 | 1.91 | 206.6 |
| o-Cresol | 108.15 | 0.52 | 56.24 | 1.12 | 121.1 |
| m-Cresol | 108.15 | 0.66 | 71.38 | 2.24 | 242.3 |
| Benzylalcohol | 108.15 | 5.81 | 628.35 | 11.4 | 1232.9 |
| Anisole | 108.15 | 13.2 | 1427.6 | 34.2 | 3698.7 |
| p-Phenylenediamine | 108.16 | 0.05 | 5.41 | 0.74 | 80.0 |
| o-Phenylenediamine | 108.16 | 0.31 | 33.53 | 9.89 | 1069.7 |
| p-Aminophenol | 109.14 | 0.062 | 6.77 | 15.2 | 1658.9 |
| m-Aminophenol | 109.14 | 0.86 | 93.86 | 15.2 | 1658.9 |
| Catechol | 110.12 | 0.2 | 22.02 | 35.3 | 3887.2 |
| Resorcinol | 110.12 | 0.8 | 88.10 | 2.73 | 300.6 |
| Calcium II chloride | 110.98 | 12.4 | 1376.2 | 9.01 | 999.9 |
| Trifluoroacetic acid | 114.03 | 20.5 | 2337.6 | 1.75 | 199.6 |
| 2,5-Hexanedione | 114.16 | 8.45 | 964.65 | 23.7 | 2705.6 |
| 1-Heptanol | 116.23 | 6.25 | 726.44 | 28 | 3254.4 |
| Sodium monochloroacetate | 116.48 | 1.45 | 168.90 | 0.65 | 75.7 |
| 2-Butoxyethanol | 118.2 | 26 | 3073.2 | 12.5 | 1477.5 |
| Chloroform | 119.37 | 13.4 | 1599.6 | 7.61 | 908.4 |
| Benzoic acid | 122.13 | 15.7 | 1917.4 | 20.7 | 2528.1 |
| Nicotinamide | 122.14 | 44.4 | 5423.0 | 28.7 | 3505.4 |

## RC $IC_{50}$ and $LD_{50}$ Values for RC Substances with Rat Oral $LD_{50}$ Data

| Substance | Molecular Weight (g/mole) | $IC_{50x}$ (mM)[1] | $IC_{50x}$ (mg/mL)[1] | Rat Oral $LD_{50}$ (mmol/kg)[2] | Rat Oral $LD_{50}$ (mg/kg)[2] |
|---|---|---|---|---|---|
| p-Toluylendiamine | 122.19 | 0.094 | 11.49 | 0.83 | 101.4 |
| Nitrobenzene | 123.12 | 12.2 | 1502.1 | 5.2 | 640.2 |
| p-Anisidine | 123.17 | 0.73 | 89.91 | 11.4 | 1404.1 |
| 2-Thiouracil | 128.16 | 0.32 | 41.01 | 7.8 | 999.6 |
| Dichloroacetic acid | 128.94 | 11.5 | 1482.8 | 21.9 | 2823.8 |
| Nickel II chloride | 129.61 | 0.27 | 34.99 | 0.81 | 105.0 |
| Cobalt II chloride | 129.83 | 0.16 | 20.77 | 0.62 | 80.5 |
| 5-Fluorouracil | 130.09 | 0.0026 | 0.34 | 1.77 | 230.3 |
| 1,1,1-Trichloroethane | 133.4 | 10.3 | 1374.0 | 77.2 | 10298.5 |
| Sodium oxalate | 134 | 0.44 | 58.96 | 1.16 | 155.4 |
| 1,2,6-Hexanetriol | 134.2 | 123 | 16506.6 | 119 | 15969.8 |
| Cupric chloride | 134.44 | 0.11 | 14.79 | 1.04 | 139.8 |
| Zinc II chloride | 136.27 | 0.13 | 17.72 | 2.57 | 350.2 |
| Salicylamide | 137.15 | 1.08 | 148.12 | 13.8 | 1892.7 |
| Isoniazid | 137.16 | 7.49 | 1027.3 | 4.74 | 650.1 |
| Salicylic acid | 138.13 | 3.38 | 466.9 | 6.45 | 890.9 |
| p-Nitrophenol | 139.12 | 0.2 | 27.8 | 2.52 | 350.6 |
| Isononylaldehyde | 142.27 | 1.52 | 216.3 | 22.8 | 3243.8 |
| 8-Hydroxyquinoline | 145.17 | 0.0033 | 0.48 | 8.27 | 1200.6 |
| Coumarin | 146.15 | 1.71 | 249.9 | 2 | 292.3 |
| N-Methyl-N'-nitro-N-nitroso-guanidine | 147.12 | 0.012 | 1.8 | 0.61 | 89.7 |
| Isobenzoic furanodione | 148.12 | 17 | 2518.0 | 27.1 | 4014.1 |
| Thymol | 150.24 | 0.23 | 34.6 | 6.52 | 979.6 |
| Acetaminophen | 151.18 | 2.71 | 409.7 | 15.9 | 2403.8 |
| Ferrous sulfate | 151.91 | 1.85 | 281.0 | 2.1 | 319.0 |
| Methyl salicylate | 152.16 | 1.7 | 258.7 | 5.83 | 887.1 |
| Phenylthiourea | 152.23 | 0.54 | 82.2 | 0.02 | 3.0 |
| 2-Nitro-p-phenylenediamine | 153.16 | 0.39 | 59.7 | 20.1 | 3078.5 |
| Carbon tetrachloride | 153.81 | 8.51 | 1308.9 | 18.2 | 2799.3 |
| Menthol | 156.3 | 0.95 | 148.5 | 20.3 | 3172.9 |
| Bromobenzene | 157.02 | 3.46 | 543.3 | 17.2 | 2700.7 |
| Dimethylaminoethyl methacrylate (polymer) | 157.24 | 0.11 | 17.3 | 11.1 | 1745.4 |
| Strontium II chloride | 158.52 | 36.4 | 5770.1 | 14.2 | 2251.0 |
| Sodium salicylate | 160.11 | 4.33 | 693.3 | 9.99 | 1599.5 |
| 6-Methylcoumarin | 160.18 | 0.31 | 49.7 | 10.5 | 1681.9 |
| Hydralazine | 160.2 | 0.33 | 52.9 | 0.56 | 89.7 |
| Nicotine | 162.26 | 1.79 | 290.4 | 0.31 | 50.3 |
| 2,4-Dichlorophenol | 163 | 0.055 | 9.0 | 3.56 | 580.3 |
| Trichloroacetic acid | 163.38 | 8.19 | 1338.1 | 30.6 | 4999.4 |

## RC $IC_{50}$ and $LD_{50}$ Values for RC Substances with Rat Oral $LD_{50}$ Data

| Substance | Molecular Weight (g/mole) | $IC_{50x}$ (mM)[1] | $IC_{50x}$ (mg/mL)[1] | Rat Oral $LD_{50}$ (mmol/kg)[2] | Rat Oral $LD_{50}$ (mg/kg)[2] |
|---|---|---|---|---|---|
| Chloral hydrate | 165.4 | 2.65 | 438.3 | 2.9 | 479.7 |
| Tetrachloroethene | 165.82 | 6.54 | 1084.5 | 53.4 | 8854.8 |
| t-Butyl hydroquinone | 166.24 | 0.069 | 11.5 | 4.81 | 799.6 |
| (-)-Phenylephrine | 167.23 | 4.45 | 744.2 | 2.09 | 349.5 |
| m-Dinitrobenzene | 168.12 | 0.39 | 65.6 | 0.49 | 82.4 |
| Azaserine | 173.15 | 0.002 | 0.35 | 0.98 | 169.7 |
| 1,2-Dibromomethane | 173.85 | 4.2 | 730.2 | 0.62 | 107.8 |
| L-Ascorbic acid | 176.14 | 1.52 | 267.7 | 67.6 | 11907.1 |
| n-Butyl benzoate | 178.25 | 0.41 | 73.1 | 28.8 | 5133.6 |
| Phenacetin | 179.24 | 1.27 | 227.6 | 9.21 | 1650.8 |
| Iproniazid | 179.25 | 0.79 | 141.6 | 2.04 | 365.7 |
| Acetylsalicylic acid | 180.17 | 2.27 | 409.0 | 5.55 | 999.9 |
| D-Glucose | 180.18 | 226 | 40720.7 | 143 | 25765.7 |
| Butylated hydoxyanisole | 180.27 | 0.24 | 43.3 | 12.2 | 2199.3 |
| 1,2,4-Trichlorobenzene | 181.44 | 0.71 | 128.8 | 4.17 | 756.6 |
| Cadmium II chloride | 183.3 | 0.0064 | 1.2 | 0.48 | 88.0 |
| 2,4-Dinitrophenol | 184.12 | 0.21 | 38.7 | 0.16 | 29.5 |
| Undecylenic acid | 184.31 | 0.18 | 33.2 | 13.6 | 2506.6 |
| Tributylamine | 185.4 | 15.4 | 2855.2 | 2.91 | 539.5 |
| Paraquat | 186.25 | 0.54 | 100.6 | 0.31 | 57.7 |
| Amrinone | 187.22 | 0.28 | 52.4 | 0.54 | 101.1 |
| Antipyrine | 188.25 | 11.6 | 2183.7 | 9.56 | 1799.7 |
| Tin II chloride | 189.59 | 1.51 | 286.3 | 3.69 | 699.6 |
| Nitrilotriacetic acid | 191.16 | 3.61 | 690.1 | 7.69 | 1470.0 |
| Nitrogen mustard * HCl | 192.53 | 0.0026 | 0.50 | 0.052 | 10.0 |
| Dimethyl phthalate | 194.2 | 23.4 | 4544.3 | 35.5 | 6894.1 |
| Caffeine | 194.22 | 2.64 | 512.7 | 0.99 | 192.3 |
| 4-Hexylresorcinol | 194.3 | 0.064 | 12.4 | 2.83 | 549.9 |
| L-Dopa | 197.21 | 0.13 | 25.6 | 9.03 | 1780.8 |
| Halothane | 197.39 | 31.1 | 6138.8 | 28.8 | 5684.8 |
| Arsenic III trioxide | 197.84 | 0.0042 | 0.8 | 0.1 | 19.8 |
| Manganese II chloride *4 H2O | 197.92 | 0.13 | 25.7 | 7.5 | 1484.4 |
| Carbaryl | 201.24 | 0.26 | 52.3 | 1.24 | 249.5 |
| Sodium cyclamate | 201.24 | 35.4 | 7123.9 | 75.8 | 15254.0 |
| Magnesium II chloride * 6 H2O | 203.33 | 70.4 | 14314.4 | 39.8 | 8092.5 |
| Phenylephrine * HCl | 203.69 | 4.16 | 847.4 | 1.72 | 350.3 |
| Triethylene melamine | 204.27 | 0.00078 | 0.16 | 0.005 | 1.0 |
| Ibuprofen | 206.31 | 0.52 | 107.3 | 4.89 | 1008.9 |
| Milrinone | 211.24 | 4.77 | 1007.6 | 0.43 | 90.8 |
| 1,3-Bis(2-chloroethyl)- 1- | 214.07 | 0.078 | 16.7 | 0.093 | 19.9 |

## RC $IC_{50}$ and $LD_{50}$ Values for RC Substances with Rat Oral $LD_{50}$ Data

| Substance | Molecular Weight (g/mole) | $IC_{50x}$ (mM)[1] | $IC_{50x}$ (mg/mL)[1] | Rat Oral $LD_{50}$ (mmol/kg)[2] | Rat Oral $LD_{50}$ (mg/kg)[2] |
|---|---|---|---|---|---|
| nitrosourea | | | | | |
| Clofibric acid | 214.66 | 2.61 | 560.3 | 5.82 | 1249.3 |
| Glutethimide | 217.29 | 1.56 | 339.0 | 2.76 | 599.7 |
| Butylated hydroxytoluene | 220.39 | 0.056 | 12.3 | 4.04 | 890.4 |
| 2,4-Dichlorophenoxyacetic acid | 221.04 | 0.77 | 170.2 | 1.67 | 369.1 |
| Diethyl phthalate | 222.26 | 5.52 | 1226.9 | 38.7 | 8601.5 |
| Bendiocarb | 223.25 | 0.18 | 40.2 | 0.8 | 178.6 |
| Diethyldithiocarbamate sodium* 3H20 | 225.33 | 0.00039 | 0.088 | 6.66 | 1500.7 |
| Ammonium persulfate | 228.22 | 0.23 | 52.5 | 3.59 | 819.3 |
| Cygon | 229.27 | 1.24 | 284.3 | 0.66 | 151.3 |
| Aminophenazone | 231.33 | 5.39 | 1246.9 | 4.32 | 999.3 |
| Nalidixic acid | 232.26 | 1.5 | 348.4 | 5.81 | 1349.4 |
| Phenobarbital | 232.26 | 3.81 | 884.9 | 0.7 | 162.6 |
| Ambazone | 237.32 | 0.038 | 9.0 | 3.16 | 749.9 |
| Mefenamic acid | 241.31 | 0.087 | 21.0 | 3.27 | 789.1 |
| Triethyltin chloride | 241.35 | 0.00046 | 0.11 | 0.021 | 5.1 |
| Busulphan | 246.32 | 0.046 | 11.3 | 0.0076 | 1.9 |
| Isoproterenol * HCl | 247.75 | 0.022 | 5.5 | 8.96 | 2219.8 |
| Pentobarbital sodium | 248.29 | 0.71 | 176.3 | 0.81 | 201.1 |
| Cupric sulfate * 5 H2O | 249.7 | 0.33 | 82.4 | 1.2 | 299.6 |
| 2,4,5-Trichlorophenoxyacetic acid | 255.48 | 0.44 | 112.4 | 1.17 | 298.9 |
| Nabam | 256.34 | 0.035 | 9.0 | 1.54 | 394.8 |
| Trichlorfon | 257.44 | 0.27 | 69.5 | 1.75 | 450.5 |
| Natulan * HCl | 257.8 | 2.74 | 706.4 | 3.04 | 783.7 |
| Diethyl sebacate | 258.4 | 1.63 | 421.2 | 56 | 14470.4 |
| Versalide | 258.44 | 0.15 | 38.8 | 1.22 | 315.3 |
| Secobarbital sodium | 260.3 | 0.21 | 54.7 | 0.48 | 124.9 |
| Barium II nitrate | 261.36 | 0.81 | 211.7 | 1.36 | 355.4 |
| Sodium bichromate VI | 261.98 | 0.00093 | 0.24 | 0.19 | 49.8 |
| Theophylline sodium acetate | 262.23 | 4.19 | 1098.7 | 2.22 | 582.2 |
| Maneb | 266.31 | 0.0042 | 1.1 | 16.9 | 4500.6 |
| 3-Cyano-2-morpholino-5-(pyrid-4-yl)-pyridine (Chemical 122) | 266.31 | 0.96 | 255.7 | 1.3 | 346.2 |
| Pentachlorophenol | 266.32 | 0.036 | 9.6 | 0.19 | 50.6 |
| Isoxepac | 268.28 | 1.33 | 356.8 | 0.74 | 198.5 |
| Dichlorophene | 269.13 | 0.0083 | 2.2 | 10 | 2691.3 |
| Mercury II chloride | 271.49 | 0.015 | 4.1 | 0.0037 | 1.0 |
| Hexachlorocyclopentadiene | 272.75 | 0.0031 | 0.85 | 0.41 | 111.8 |
| Disulfoton | 274.42 | 0.11 | 30.2 | 0.0073 | 2.0 |
| Zineb | 275.73 | 0.059 | 16.3 | 18.9 | 5211.3 |

## RC $IC_{50}$ and $LD_{50}$ Values for RC Substances with Rat Oral $LD_{50}$ Data

| Substance | Molecular Weight (g/mole) | $IC_{50x}$ (mM)[1] | $IC_{50x}$ (mg/mL)[1] | Rat Oral $LD_{50}$ (mmol/kg)[2] | Rat Oral $LD_{50}$ (mg/kg)[2] |
|---|---|---|---|---|---|
| Triethyl citrate | 276.32 | 14.7 | 4061.9 | 25.3 | 6990.9 |
| Azathioprine | 277.29 | 0.14 | 38.8 | 1.93 | 535.2 |
| Amitriptyline | 277.44 | 0.056 | 15.5 | 1.15 | 319.1 |
| Imidazolidinyl urea | 278.26 | 0.36 | 100.2 | 9.34 | 2598.9 |
| Dibutyl phthalate | 278.38 | 0.76 | 211.6 | 43.1 | 11998.2 |
| Cyclophosphamide * H2O | 279.13 | 3.12 | 870.9 | 0.34 | 94.9 |
| Flufenamic acid | 281.25 | 0.029 | 8.2 | 0.97 | 272.8 |
| Cycloheximide | 281.39 | 0.00059 | 0.17 | 0.0071 | 2.0 |
| Diazepam | 284.76 | 0.16 | 45.6 | 2.49 | 709.1 |
| Retinol | 286.5 | 0.00054 | 0.15 | 6.98 | 1999.8 |
| Dihydralazine sulfate | 288.32 | 0.14 | 40.4 | 2.84 | 818.8 |
| Sodium dodecyl sulfate | 289.43 | 0.27 | 78.1 | 4.45 | 1288.0 |
| Lindane | 290.82 | 0.41 | 119.2 | 0.26 | 75.6 |
| Parathion | 291.28 | 0.093 | 27.1 | 0.0069 | 2.0 |
| Diphenhydramine * HCl | 291.85 | 0.24 | 70.0 | 2.93 | 855.1 |
| Naftipramide | 298.47 | 0.084 | 25.1 | 3.45 | 1029.7 |
| Cis-platinum | 300.07 | 0.0028 | 0.84 | 0.086 | 25.8 |
| all-trans-Retinoic acid | 300.48 | 0.11 | 33.1 | 6.66 | 2001.2 |
| Captan | 300.59 | 0.0039 | 1.2 | 33.3 | 10009.6 |
| Chlorambucil | 304.24 | 0.076 | 23.1 | 0.25 | 76.1 |
| Orphenadrine * HCl | 305.88 | 0.49 | 149.9 | 1.39 | 425.2 |
| Buflomedil | 307.43 | 1.35 | 415.0 | 1.19 | 365.8 |
| Warfarin | 308.35 | 0.67 | 206.6 | 1.05 | 323.8 |
| Phenylbutazone | 308.41 | 0.32 | 98.7 | 1.22 | 376.3 |
| Aflatoxin B1 | 312.29 | 0.034 | 10.6 | 0.016 | 5.0 |
| Refortan | 313.1 | 0.25 | 78.3 | 10.1 | 3162.3 |
| Imipramine * HCl | 316.91 | 0.054 | 17.1 | 0.96 | 304.2 |
| p,p'-DDE | 318.02 | 0.1 | 31.8 | 2.77 | 880.9 |
| Chlorpromazine | 318.89 | 0.014 | 4.5 | 0.44 | 140.3 |
| p,p'-DDD | 320.04 | 0.024 | 7.7 | 0.35 | 112.0 |
| Chloramphenicol | 323.15 | 0.79 | 255.3 | 10.5 | 3393.1 |
| Oxyphenbutazone | 324.41 | 0.19 | 61.6 | 3.08 | 999.2 |
| Tributyltin chloride | 325.53 | 0.00054 | 0.18 | 0.37 | 120.4 |
| Malathion | 330.38 | 0.2 | 66.1 | 2.68 | 885.4 |
| Frusemide | 330.76 | 2.33 | 770.7 | 7.86 | 2599.8 |
| Mitomycin C | 334.37 | 0.00084 | 0.28 | 0.042 | 14.0 |
| Metamizol | 334.38 | 0.58 | 193.9 | 21.5 | 7189.2 |
| Dicoumarol | 336.31 | 0.027 | 9.1 | 2.11 | 709.6 |
| Caffeine sodium benzoate | 338.33 | 5.67 | 1918.3 | 2.54 | 859.4 |
| Papaverine | 339.42 | 0.045 | 15.3 | 0.96 | 325.8 |

## RC $IC_{50}$ and $LD_{50}$ Values for RC Substances with Rat Oral $LD_{50}$ Data

| Substance | Molecular Weight (g/mole) | $IC_{50x}$ (mM)[1] | $IC_{50x}$ (mg/mL)[1] | Rat Oral $LD_{50}$ (mmol/kg)[2] | Rat Oral $LD_{50}$ (mg/kg)[2] |
|---|---|---|---|---|---|
| Diquat dibromide | 344.08 | 0.16 | 55.1 | 0.67 | 230.5 |
| Gibberellic acid | 346.41 | 2.3 | 796.7 | 18.2 | 6304.7 |
| Dodecylbenzene sodiumsulfonate | 348.52 | 0.42 | 146.4 | 3.62 | 1261.6 |
| Triisooctylamine | 353.76 | 0.023 | 8.1 | 4.58 | 1620.2 |
| p,p'-DDT | 354.48 | 0.16 | 56.7 | 0.32 | 113.4 |
| Benzylpenicillin sodium | 356.4 | 5.73 | 2042.2 | 19.4 | 6914.2 |
| Indomethacin | 357.81 | 0.16 | 57.2 | 0.034 | 12.2 |
| Quinine * HCl | 360.92 | 0.075 | 27.1 | 1.72 | 620.8 |
| Cetyltrimethylammonium chloride | 362.16 | 0.021 | 7.6 | 1.31 | 474.4 |
| Hexadecyltrimethylammonium bromide | 364.53 | 0.0089 | 3.2 | 1.12 | 408.3 |
| Aldrin | 364.9 | 0.067 | 24.4 | 0.11 | 40.1 |
| Benzalkonium chloride | 365 | 0.0052 | 1.9 | 1.1 | 401.5 |
| Triphenyltin hydroxide | 367.03 | 0.000049 | 0.0180 | 0.12 | 44.0 |
| Potassium hexacyanoferrate II | 368.37 | 42.3 | 15582.1 | 17.4 | 6409.6 |
| Amphetamine sulfate | 368.54 | 1.97 | 726.0 | 0.15 | 55.3 |
| Homatropine methylbromide | 370.33 | 9 | 3333.0 | 3.24 | 1199.9 |
| Kelthane | 370.48 | 0.012 | 4.4 | 1.55 | 574.2 |
| Di(2-ethylhexyl)adipate | 370.64 | 3.15 | 1167.5 | 24.6 | 9117.7 |
| Ioxynil | 370.91 | 0.11 | 40.8 | 0.3 | 111.3 |
| Heptachlor | 373.3 | 0.059 | 22.0 | 0.11 | 41.1 |
| Dextropropoxyphene * HCl | 375.98 | 0.49 | 184.2 | 0.22 | 82.7 |
| Dieldrin | 380.9 | 0.18 | 68.6 | 0.12 | 45.7 |
| Scopolamine * HBr | 384.31 | 1.08 | 415.1 | 3.3 | 1268.2 |
| Di(2-ethylhexyl)phthalate | 390.62 | 0.84 | 328.1 | 79.4 | 31015.2 |
| Rotenone | 394.45 | 0.00013 | 0.051 | 0.33 | 130.2 |
| Hexachlorophene | 406.89 | 0.0079 | 3.2 | 0.15 | 61.0 |
| Chlordan | 409.76 | 0.06 | 24.6 | 1.12 | 458.9 |
| Hydroxyzine * HCl | 411.41 | 0.067 | 27.6 | 2.31 | 950.4 |
| Chloroquine sulfate | 418 | 0.06 | 25.1 | 2.6 | 1086.8 |
| Quinidine sulfate | 422.54 | 0.12 | 50.7 | 1.08 | 456.3 |
| Oxatomide | 426.61 | 0.019 | 8.1 | 3.31 | 1412.1 |
| Xanthinol nicotinate | 434.51 | 15.8 | 6865.3 | 32.5 | 14121.6 |
| Mitoxantrone | 444.54 | 0.0024 | 1.07 | 1.32 | 586.8 |
| Amethopterin | 454.5 | 0.00014 | 0.064 | 0.3 | 136.4 |
| Dimenhydrinate | 470.02 | 0.076 | 35.7 | 2.81 | 1320.8 |
| Emetine | 480.71 | 0.00016 | 0.077 | 0.14 | 67.3 |
| Tetracycline * HCl | 480.94 | 0.14 | 67.3 | 13.4 | 6444.6 |
| VerapamilHCl | 491.13 | 0.1 | 49.1 | 0.22 | 108.0 |
| Chlorhexidine | 505.52 | 0.015 | 7.6 | 18.2 | 9200.5 |

## RC $IC_{50}$ and $LD_{50}$ Values for RC Substances with Rat Oral $LD_{50}$ Data

| Substance | Molecular Weight (g/mole) | $IC_{50x}$ (mM)[1] | $IC_{50x}$ (mg/mL)[1] | Rat Oral $LD_{50}$ (mmol/kg)[2] | Rat Oral $LD_{50}$ (mg/kg)[2] |
|---|---|---|---|---|---|
| Chloroquine diphosphate | 515.92 | 0.017 | 8.8 | 1.88 | 969.9 |
| Triton X-100 | 647 | 0.055 | 35.6 | 2.78 | 1798.7 |
| Atropine sulfate | 676.9 | 0.22 | 148.9 | 0.92 | 622.7 |
| Digitoxin | 765.05 | 0.00011 | 0.0842 | 0.073 | 55.8 |
| Trypan blue | 964.88 | 0.095 | 91.7 | 6.43 | 6204.2 |
| Actinomycin D | 1255.6 | 0.0000081 | 0.0102 | 0.0057 | 7.2 |

Abbreviations: RC=Registry of Cytotoxicity.
[1]Geometric mean of the $IC_{50}$ values collected from the literature for various *in vitro* basal cytotoxicity endpoints and cell types (from the RC [Halle 1998, 2003]).
[2]Rat oral $LD_{50}$ values used in the RC (Halle 1998, 2003), which generally came from the 1983/1984 Registry of Toxic Effects for Chemical Substances®.

# Appendix K4

## Individual Laboratory $LD_{50}$ Predictions: RC Rat-Only Millimole Regression

***[This Page Intentionally Left Blank]***

## Individual Laboratory LD50 Predictions: RC Rat-Only Millimole Regression

| NRU Test Method | Substance | Lab | Log Reference $LD_{50}$ (mmol/kg)[1] | Reference $LD_{50}$ (mg/kg)[1] | Observed $LD_{50}$ Toxicity Category[2] (mg/kg) | Log Predicted $LD_{50}$ (mmol/kg)[3] | Predicted $LD_{50}$ (mg/kg)[3] | Predicted $LD_{50}$ Toxicity Category[2] (mg/kg) | Log $IC_{50}$ (mM)[4] |
|---|---|---|---|---|---|---|---|---|---|
| 3T3 | 1,1,1-Trichloroethane | ECBC | 1.957 | 12078 | > 5000 | 51.712 | 6899 | > 5000 | 2.489 |
| 3T3 | 1,1,1-Trichloroethane | FAL | 1.957 | 12078 | > 5000 | 38.621 | 5152 | > 5000 | 2.200 |
| 3T3 | 1,1,1-Trichloroethane | IIVS | 1.957 | 12078 | > 5000 | 27.604 | 3683 | 2000-5000 | 1.868 |
| 3T3 | 2-Propanol | ECBC | 1.929 | 5105 | > 5000 | 21.855 | 1314 | 300-2000 | 1.637 |
| 3T3 | 2-Propanol | FAL | 1.929 | 5105 | > 5000 | 26.293 | 1580 | 300-2000 | 1.820 |
| 3T3 | 2-Propanol | IIVS | 1.929 | 5105 | > 5000 | 26.694 | 1605 | 300-2000 | 1.835 |
| 3T3 | 5-Aminosalicylic acid | ECBC | 1.350 | 3428 | 2000-5000 | 11.241 | 1721 | 300-2000 | 0.979 |
| 3T3 | 5-Aminosalicylic acid | FAL | 1.350 | 3428 | 2000-5000 | 13.050 | 1998 | 300-2000 | 1.127 |
| 3T3 | 5-Aminosalicylic acid | IIVS | 1.350 | 3428 | 2000-5000 | 11.540 | 1767 | 300-2000 | 1.005 |
| 3T3 | Acetaminophen | ECBC | 1.155 | 2162 | 2000-5000 | 2.333 | 353 | 300-2000 | -0.577 |
| 3T3 | Acetaminophen | FAL | 1.155 | 2162 | 2000-5000 | 2.859 | 432 | 300-2000 | -0.375 |
| 3T3 | Acetaminophen | IIVS | 1.155 | 2162 | 2000-5000 | 2.390 | 361 | 300-2000 | -0.553 |
| 3T3 | Acetonitrile | ECBC | 1.942 | 3595 | 2000-5000 | 38.425 | 1577 | 300-2000 | 2.195 |
| 3T3 | Acetonitrile | FAL | 1.942 | 3595 | 2000-5000 | 43.235 | 1775 | 300-2000 | 2.312 |
| 3T3 | Acetonitrile | IIVS | 1.942 | 3595 | 2000-5000 | 45.155 | 1854 | 300-2000 | 2.355 |
| 3T3 | Acetylsalicylic acid | ECBC | 0.922 | 1506 | 300-2000 | 7.307 | 1317 | 300-2000 | 0.553 |
| 3T3 | Acetylsalicylic acid | FAL | 0.922 | 1506 | 300-2000 | 9.635 | 1736 | 300-2000 | 0.827 |
| 3T3 | Acetylsalicylic acid | IIVS | 0.922 | 1506 | 300-2000 | 5.915 | 1066 | 300-2000 | 0.344 |
| 3T3 | Aminopterin | ECBC | -1.799 | 7 | 5-50 | 0.029 | 13 | 5-50 | -4.926 |
| 3T3 | Aminopterin | FAL | -1.799 | 7 | 5-50 | 0.039 | 17 | 5-50 | -4.612 |
| 3T3 | Aminopterin | IIVS | -1.799 | 7 | 5-50 | 0.027 | 12 | 5-50 | -4.980 |
| 3T3 | Amitriptyline HCl | ECBC | 0.046 | 349 | 300-2000 | 0.731 | 229 | 50-300 | -1.724 |
| 3T3 | Amitriptyline HCl | FAL | 0.046 | 349 | 300-2000 | 0.820 | 257 | 50-300 | -1.611 |
| 3T3 | Amitriptyline HCl | IIVS | 0.046 | 349 | 300-2000 | 0.821 | 258 | 50-300 | -1.609 |
| 3T3 | Arsenic III trioxide | ECBC | -0.897 | 25 | 5-50 | 0.589 | 117 | 50-300 | -1.937 |
| 3T3 | Arsenic III trioxide | FAL | -0.897 | 25 | 5-50 | 0.418 | 83 | 50-300 | -2.278 |
| 3T3 | Arsenic III trioxide | IIVS | -0.897 | 25 | 5-50 | 0.731 | 145 | 50-300 | -1.724 |
| 3T3 | Atropine sulfate | ECBC | 0.071 | 819 | 300-2000 | 1.306 | 907 | 300-2000 | -1.151 |
| 3T3 | Atropine sulfate | FAL | 0.071 | 819 | 300-2000 | 1.989 | 1382 | 300-2000 | -0.734 |
| 3T3 | Atropine sulfate | IIVS | 0.071 | 819 | 300-2000 | 1.524 | 1059 | 300-2000 | -0.998 |
| 3T3 | Boric acid | ECBC | 1.744 | 3426 | 2000-5000 | 16.686 | 1032 | 300-2000 | 1.370 |
| 3T3 | Boric acid | FAL | 1.744 | 3426 | 2000-5000 | 25.892 | 1601 | 300-2000 | 1.804 |
| 3T3 | Boric acid | IIVS | 1.744 | 3426 | 2000-5000 | 14.839 | 918 | 300-2000 | 1.254 |
| 3T3 | Busulfan | ECBC | -1.308 | 12 | 5-50 | 1.811 | 446 | 300-2000 | -0.827 |
| 3T3 | Busulfan | FAL | -1.308 | 12 | 5-50 | 4.505 | 1110 | 300-2000 | 0.075 |
| 3T3 | Busulfan | IIVS | -1.308 | 12 | 5-50 | 1.955 | 482 | 300-2000 | -0.751 |
| 3T3 | Cadmium II chloride | ECBC | -0.132 | 135 | 50-300 | 0.306 | 56 | 50-300 | -2.585 |
| 3T3 | Cadmium II chloride | FAL | -0.132 | 135 | 50-300 | 0.280 | 51 | 50-300 | -2.675 |
| 3T3 | Cadmium II chloride | IIVS | -0.132 | 135 | 50-300 | 0.374 | 69 | 50-300 | -2.387 |
| 3T3 | Caffeine | ECBC | 0.203 | 310 | 300-2000 | 3.537 | 687 | 300-2000 | -0.165 |
| 3T3 | Caffeine | FAL | 0.203 | 310 | 300-2000 | 3.616 | 702 | 300-2000 | -0.143 |

## Individual Laboratory LD50 Predictions: RC Rat-Only Millimole Regression

| NRU Test Method | Substance | Lab | Log Reference $LD_{50}$ (mmol/kg)[1] | Reference $LD_{50}$ (mg/kg)[1] | Observed $LD_{50}$ Toxicity Category[2] (mg/kg) | Log Predicted $LD_{50}$ (mmol/kg)[3] | Predicted $LD_{50}$ (mg/kg)[3] | Predicted $LD_{50}$ Toxicity Category[2] (mg/kg) | Log $IC_{50}$ (mM)[4] |
|---|---|---|---|---|---|---|---|---|---|
| 3T3 | Caffeine | IIVS | 0.203 | 310 | 300-2000 | 4.149 | 806 | 300-2000 | -0.007 |
| 3T3 | Carbamazepine | ECBC | 1.075 | 2807 | 2000-5000 | 2.631 | 622 | 300-2000 | -0.457 |
| 3T3 | Carbamazepine | FAL | 1.075 | 2807 | 2000-5000 | 3.381 | 799 | 300-2000 | -0.209 |
| 3T3 | Carbamazepine | IIVS | 1.075 | 2807 | 2000-5000 | 2.754 | 651 | 300-2000 | -0.412 |
| 3T3 | Carbon Tetrachloride | ECBC | 1.391 | 3783 | 2000-5000 | NA | NA | NA | NA |
| 3T3 | Carbon Tetrachloride | FAL | 1.391 | 3783 | 2000-5000 | NA | NA | NA | NA |
| 3T3 | Carbon Tetrachloride | IIVS | 1.391 | 3783 | 2000-5000 | NA | NA | NA | NA |
| 3T3 | Chloral hydrate | ECBC | 0.586 | 638 | 300-2000 | 4.009 | 663 | 300-2000 | -0.041 |
| 3T3 | Chloral hydrate | FAL | 0.586 | 638 | 300-2000 | 4.924 | 814 | 300-2000 | 0.162 |
| 3T3 | Chloral hydrate | IIVS | 0.586 | 638 | 300-2000 | 4.224 | 699 | 300-2000 | 0.011 |
| 3T3 | Chloramphenicol | ECBC | 1.033 | 3490 | 2000-5000 | 1.907 | 616 | 300-2000 | -0.776 |
| 3T3 | Chloramphenicol | FAL | 1.033 | 3490 | 2000-5000 | 3.824 | 1236 | 300-2000 | -0.088 |
| 3T3 | Chloramphenicol | IIVS | 1.033 | 3490 | 2000-5000 | 3.021 | 976 | 300-2000 | -0.321 |
| 3T3 | Citric acid | ECBC | 1.489 | 5929 | > 5000 | 6.124 | 1176 | 300-2000 | 0.378 |
| 3T3 | Citric acid | FAL | 1.489 | 5929 | > 5000 | 9.136 | 1755 | 300-2000 | 0.774 |
| 3T3 | Citric acid | IIVS | 1.489 | 5929 | > 5000 | 8.042 | 1545 | 300-2000 | 0.648 |
| 3T3 | Colchicine | ECBC | -1.425 | 15 | 5-50 | 0.055 | 22 | 5-50 | -4.292 |
| 3T3 | Colchicine | FAL | -1.425 | 15 | 5-50 | 0.102 | 41 | 5-50 | -3.671 |
| 3T3 | Colchicine | IIVS | -1.425 | 15 | 5-50 | 0.062 | 25 | 5-50 | -4.158 |
| 3T3 | Cupric sulfate pentahydrate | ECBC | 0.279 | 475 | 300-2000 | 2.572 | 642 | 300-2000 | -0.480 |
| 3T3 | Cupric sulfate pentahydrate | FAL | 0.279 | 475 | 300-2000 | 2.985 | 745 | 300-2000 | -0.333 |
| 3T3 | Cupric sulfate pentahydrate | IIVS | 0.279 | 475 | 300-2000 | 0.786 | 196 | 50-300 | -1.653 |
| 3T3 | Cycloheximide | ECBC | -2.148 | 2 | < 5 | 0.137 | 38 | 5-50 | -3.384 |
| 3T3 | Cycloheximide | FAL | -2.148 | 2 | < 5 | 0.266 | 75 | 50-300 | -2.726 |
| 3T3 | Cycloheximide | IIVS | -2.148 | 2 | < 5 | 0.132 | 37 | 5-50 | -3.420 |
| 3T3 | Dibutyl phthalate | ECBC | 1.504 | 8892 | > 5000 | 1.405 | 391 | 300-2000 | -1.079 |
| 3T3 | Dibutyl phthalate | FAL | 1.504 | 8892 | > 5000 | 3.365 | 936 | 300-2000 | -0.214 |
| 3T3 | Dibutyl phthalate | IIVS | 1.504 | 8892 | > 5000 | 1.334 | 371 | 300-2000 | -1.129 |
| 3T3 | Dichlorvos | ECBC | -0.576 | 59 | 50-300 | 1.043 | 230 | 50-300 | -1.373 |
| 3T3 | Dichlorvos | FAL | -0.576 | 59 | 50-300 | 1.807 | 399 | 300-2000 | -0.829 |
| 3T3 | Dichlorvos | IIVS | -0.576 | 59 | 50-300 | 1.397 | 309 | 300-2000 | -1.084 |
| 3T3 | Diethyl phthalate | ECBC | 1.622 | 9311 | > 5000 | 2.706 | 601 | 300-2000 | -0.430 |
| 3T3 | Diethyl phthalate | FAL | 1.622 | 9311 | > 5000 | 3.444 | 765 | 300-2000 | -0.191 |
| 3T3 | Diethyl phthalate | IIVS | 1.622 | 9311 | > 5000 | 3.000 | 667 | 300-2000 | -0.328 |
| 3T3 | Digoxin | ECBC | -1.441 | 28 | 5-50 | 2.866 | 2238 | 2000-5000 | -0.373 |
| 3T3 | Digoxin | FAL | -1.441 | 28 | 5-50 | 4.345 | 3393 | 2000-5000 | 0.039 |
| 3T3 | Digoxin | IIVS | -1.441 | 28 | 5-50 | 2.797 | 2184 | 2000-5000 | -0.397 |
| 3T3 | Dimethylformamide | ECBC | 1.861 | 5305 | > 5000 | 27.454 | 2007 | 2000-5000 | 1.862 |
| 3T3 | Dimethylformamide | FAL | 1.861 | 5305 | > 5000 | 27.770 | 2030 | 2000-5000 | 1.874 |
| 3T3 | Dimethylformamide | IIVS | 1.861 | 5305 | > 5000 | 26.464 | 1934 | 300-2000 | 1.826 |
| 3T3 | Diquat dibromide monohydrate | ECBC | -0.355 | 160 | 50-300 | 0.566 | 205 | 50-300 | -1.978 |
| 3T3 | Diquat dibromide monohydrate | FAL | -0.355 | 160 | 50-300 | 1.312 | 475 | 300-2000 | -1.146 |

## Individual Laboratory LD50 Predictions: RC Rat-Only Millimole Regression

| NRU Test Method | Substance | Lab | Log Reference $LD_{50}$ (mmol/kg)[1] | Reference $LD_{50}$ (mg/kg)[1] | Observed $LD_{50}$ Toxicity Category[2] (mg/kg) | Log Predicted $LD_{50}$ (mmol/kg)[3] | Predicted $LD_{50}$ (mg/kg)[3] | Predicted $LD_{50}$ Toxicity Category[2] (mg/kg) | Log $IC_{50}$ (mM)[4] |
|---|---|---|---|---|---|---|---|---|---|
| 3T3 | Diquat dibromide monohydrate | IIVS | -0.355 | 160 | 50-300 | 0.652 | 236 | 50-300 | -1.837 |
| 3T3 | Disulfoton | ECBC | -1.739 | 5 | < 5 | 2.900 | 796 | 300-2000 | -0.361 |
| 3T3 | Disulfoton | FAL | -1.739 | 5 | < 5 | 21.284 | 5841 | > 5000 | 1.611 |
| 3T3 | Disulfoton | IIVS | -1.739 | 5 | < 5 | 1.939 | 532 | 300-2000 | -0.760 |
| 3T3 | Endosulfan | ECBC | -1.165 | 28 | 5-50 | 0.592 | 241 | 50-300 | -1.933 |
| 3T3 | Endosulfan | FAL | -1.165 | 28 | 5-50 | 0.907 | 369 | 300-2000 | -1.511 |
| 3T3 | Endosulfan | IIVS | -1.165 | 28 | 5-50 | 0.512 | 209 | 50-300 | -2.076 |
| 3T3 | Epinephrine bitartrate | ECBC | -1.921 | 4 | < 5 | 1.837 | 612 | 300-2000 | -0.813 |
| 3T3 | Epinephrine bitartrate | FAL | -1.921 | 4 | < 5 | 2.013 | 671 | 300-2000 | -0.723 |
| 3T3 | Epinephrine bitartrate | IIVS | -1.921 | 4 | < 5 | 2.016 | 672 | 300-2000 | -0.721 |
| 3T3 | Ethanol | ECBC | 2.391 | 11324 | > 5000 | 33.216 | 1530 | 300-2000 | 2.051 |
| 3T3 | Ethanol | FAL | 2.391 | 11324 | > 5000 | 40.989 | 1888 | 300-2000 | 2.259 |
| 3T3 | Ethanol | IIVS | 2.391 | 11324 | > 5000 | 36.466 | 1680 | 300-2000 | 2.143 |
| 3T3 | Ethylene glycol | ECBC | 2.062 | 7161 | > 5000 | 50.675 | 3146 | 2000-5000 | 2.469 |
| 3T3 | Ethylene glycol | FAL | 2.062 | 7161 | > 5000 | 63.899 | 3967 | 2000-5000 | 2.698 |
| 3T3 | Ethylene glycol | IIVS | 2.062 | 7161 | > 5000 | 58.942 | 3659 | 2000-5000 | 2.618 |
| 3T3 | Fenpropathrin | ECBC | -0.664 | 76 | 50-300 | 1.253 | 438 | 300-2000 | -1.191 |
| 3T3 | Fenpropathrin | FAL | -0.664 | 76 | 50-300 | 1.502 | 525 | 300-2000 | -1.012 |
| 3T3 | Fenpropathrin | IIVS | -0.664 | 76 | 50-300 | 1.098 | 384 | 300-2000 | -1.322 |
| 3T3 | Gibberellic acid | ECBC | 1.241 | 6039 | > 5000 | 16.573 | 5741 | > 5000 | 1.363 |
| 3T3 | Gibberellic acid | FAL | 1.241 | 6039 | > 5000 | NA | NA | NA | NA |
| 3T3 | Gibberellic acid | IIVS | 1.241 | 6039 | > 5000 | 16.242 | 5626 | > 5000 | 1.343 |
| 3T3 | Glutethimide | ECBC | 0.441 | 600 | 300-2000 | 3.720 | 808 | 300-2000 | -0.115 |
| 3T3 | Glutethimide | FAL | 0.441 | 600 | 300-2000 | 4.701 | 1022 | 300-2000 | 0.117 |
| 3T3 | Glutethimide | IIVS | 0.441 | 600 | 300-2000 | 3.279 | 712 | 300-2000 | -0.240 |
| 3T3 | Glycerol | ECBC | 2.332 | 19770 | > 5000 | 44.226 | 4073 | 2000-5000 | 2.334 |
| 3T3 | Glycerol | FAL | 2.332 | 19770 | > 5000 | 51.100 | 4706 | 2000-5000 | 2.477 |
| 3T3 | Glycerol | IIVS | 2.332 | 19770 | > 5000 | 49.997 | 4604 | 2000-5000 | 2.455 |
| 3T3 | Haloperidol | ECBC | -0.057 | 330 | 300-2000 | 0.643 | 242 | 50-300 | -1.851 |
| 3T3 | Haloperidol | FAL | -0.057 | 330 | 300-2000 | 0.770 | 289 | 50-300 | -1.673 |
| 3T3 | Haloperidol | IIVS | -0.057 | 330 | 300-2000 | 0.651 | 245 | 50-300 | -1.840 |
| 3T3 | Hexachlorophene | ECBC | -0.696 | 82 | 50-300 | 0.589 | 240 | 50-300 | -1.939 |
| 3T3 | Hexachlorophene | FAL | -0.696 | 82 | 50-300 | 0.615 | 250 | 50-300 | -1.896 |
| 3T3 | Hexachlorophene | IIVS | -0.696 | 82 | 50-300 | 0.487 | 198 | 50-300 | -2.126 |
| 3T3 | Lactic acid | ECBC | 1.606 | 3635 | 2000-5000 | 19.279 | 1737 | 300-2000 | 1.513 |
| 3T3 | Lactic acid | FAL | 1.606 | 3635 | 2000-5000 | 20.720 | 1866 | 300-2000 | 1.584 |
| 3T3 | Lactic acid | IIVS | 1.606 | 3635 | 2000-5000 | 18.836 | 1697 | 300-2000 | 1.490 |
| 3T3 | Lindane | ECBC | -0.464 | 100 | 50-300 | 2.530 | 736 | 300-2000 | -0.496 |
| 3T3 | Lindane | FAL | -0.464 | 100 | 50-300 | 3.903 | 1135 | 300-2000 | -0.067 |
| 3T3 | Lindane | IIVS | -0.464 | 100 | 50-300 | 2.091 | 608 | 300-2000 | -0.685 |
| 3T3 | Lithium I carbonate | ECBC | 0.902 | 590 | 300-2000 | 10.179 | 752 | 300-2000 | 0.881 |
| 3T3 | Lithium I carbonate | FAL | 0.902 | 590 | 300-2000 | NA | NA | NA | NA |

## Individual Laboratory LD50 Predictions: RC Rat-Only Millimole Regression

| NRU Test Method | Substance | Lab | Log Reference $LD_{50}$ (mmol/kg)[1] | Reference $LD_{50}$ (mg/kg)[1] | Observed $LD_{50}$ Toxicity Category[2] (mg/kg) | Log Predicted $LD_{50}$ (mmol/kg)[3] | Predicted $LD_{50}$ (mg/kg)[3] | Predicted $LD_{50}$ Toxicity Category[2] (mg/kg) | Log $IC_{50}$ (mM)[4] |
|---|---|---|---|---|---|---|---|---|---|
| 3T3 | Lithium I carbonate | IIVS | 0.902 | 590 | 300-2000 | NA | NA | NA | NA |
| 3T3 | Meprobamate | ECBC | 0.803 | 1387 | 300-2000 | 5.149 | 1124 | 300-2000 | 0.207 |
| 3T3 | Meprobamate | FAL | 0.803 | 1387 | 300-2000 | 7.663 | 1673 | 300-2000 | 0.600 |
| 3T3 | Meprobamate | IIVS | 0.803 | 1387 | 300-2000 | 5.363 | 1171 | 300-2000 | 0.247 |
| 3T3 | Mercury II chloride | ECBC | -0.830 | 40 | 5-50 | 0.614 | 167 | 50-300 | -1.897 |
| 3T3 | Mercury II chloride | FAL | -0.830 | 40 | 5-50 | 0.772 | 210 | 50-300 | -1.670 |
| 3T3 | Mercury II chloride | IIVS | -0.830 | 40 | 5-50 | 0.619 | 168 | 50-300 | -1.889 |
| 3T3 | Methanol | ECBC | 2.430 | 8710 | > 5000 | NA | NA | NA | NA |
| 3T3 | Methanol | FAL | 2.430 | 8710 | > 5000 | NA | NA | NA | NA |
| 3T3 | Methanol | IIVS | 2.430 | 8710 | > 5000 | NA | NA | NA | NA |
| 3T3 | Nicotine | ECBC | -0.367 | 70 | 50-300 | 5.196 | 843 | 300-2000 | 0.216 |
| 3T3 | Nicotine | FAL | -0.367 | 70 | 50-300 | 6.170 | 1001 | 300-2000 | 0.386 |
| 3T3 | Nicotine | IIVS | -0.367 | 70 | 50-300 | 6.525 | 1058 | 300-2000 | 0.441 |
| 3T3 | Paraquat | ECBC | -0.443 | 93 | 50-300 | 1.371 | 353 | 300-2000 | -1.103 |
| 3T3 | Paraquat | FAL | -0.443 | 93 | 50-300 | 1.361 | 350 | 300-2000 | -1.109 |
| 3T3 | Paraquat | IIVS | -0.443 | 93 | 50-300 | 1.365 | 351 | 300-2000 | -1.107 |
| 3T3 | Parathion | ECBC | -1.679 | 6 | 5-50 | 1.310 | 382 | 300-2000 | -1.147 |
| 3T3 | Parathion | FAL | -1.679 | 6 | 5-50 | 2.793 | 814 | 300-2000 | -0.398 |
| 3T3 | Parathion | IIVS | -1.679 | 6 | 5-50 | 1.336 | 389 | 300-2000 | -1.128 |
| 3T3 | Phenobarbital | ECBC | -0.016 | 224 | 50-300 | 6.449 | 1498 | 300-2000 | 0.429 |
| 3T3 | Phenobarbital | FAL | -0.016 | 224 | 50-300 | 6.743 | 1566 | 300-2000 | 0.473 |
| 3T3 | Phenobarbital | IIVS | -0.016 | 224 | 50-300 | 5.678 | 1319 | 300-2000 | 0.303 |
| 3T3 | Phenol | ECBC | 0.908 | 762 | 300-2000 | 3.147 | 296 | 50-300 | -0.280 |
| 3T3 | Phenol | FAL | 0.908 | 762 | 300-2000 | 4.332 | 408 | 300-2000 | 0.036 |
| 3T3 | Phenol | IIVS | 0.908 | 762 | 300-2000 | 3.375 | 318 | 300-2000 | -0.211 |
| 3T3 | Phenylthiourea | ECBC | -1.705 | 3 | < 5 | 1.870 | 285 | 50-300 | -0.795 |
| 3T3 | Phenylthiourea | FAL | -1.705 | 3 | < 5 | 5.025 | 765 | 300-2000 | 0.183 |
| 3T3 | Phenylthiourea | IIVS | -1.705 | 3 | < 5 | 3.271 | 498 | 300-2000 | -0.242 |
| 3T3 | Physostigmine | ECBC | -1.741 | 5 | < 5 | 1.463 | 403 | 300-2000 | -1.038 |
| 3T3 | Physostigmine | FAL | -1.741 | 5 | < 5 | 1.747 | 481 | 300-2000 | -0.863 |
| 3T3 | Physostigmine | IIVS | -1.741 | 5 | < 5 | 1.313 | 361 | 300-2000 | -1.145 |
| 3T3 | Potassium cyanide | ECBC | -0.956 | 7 | 5-50 | 2.195 | 143 | 50-300 | -0.637 |
| 3T3 | Potassium cyanide | FAL | -0.956 | 7 | 5-50 | 5.970 | 389 | 300-2000 | 0.353 |
| 3T3 | Potassium cyanide | IIVS | -0.956 | 7 | 5-50 | 2.425 | 158 | 50-300 | -0.538 |
| 3T3 | Potassium I chloride | ECBC | 1.575 | 2802 | 2000-5000 | 22.149 | 1651 | 300-2000 | 1.650 |
| 3T3 | Potassium I chloride | FAL | 1.575 | 2802 | 2000-5000 | 23.062 | 1719 | 300-2000 | 1.690 |
| 3T3 | Potassium I chloride | IIVS | 1.575 | 2802 | 2000-5000 | 23.182 | 1728 | 300-2000 | 1.695 |
| 3T3 | Procainamide HCl | ECBC | 0.856 | 1950 | 300-2000 | 4.952 | 1346 | 300-2000 | 0.168 |
| 3T3 | Procainamide HCl | FAL | 0.856 | 1950 | 300-2000 | 5.115 | 1390 | 300-2000 | 0.200 |
| 3T3 | Procainamide HCl | IIVS | 0.856 | 1950 | 300-2000 | 5.442 | 1479 | 300-2000 | 0.261 |
| 3T3 | Propranolol | ECBC | 0.197 | 466 | 300-2000 | 1.063 | 314 | 300-2000 | -1.354 |
| 3T3 | Propranolol | FAL | 0.197 | 466 | 300-2000 | 1.037 | 307 | 300-2000 | -1.378 |

## Individual Laboratory LD50 Predictions: RC Rat-Only Millimole Regression

| NRU Test Method | Substance | Lab | Log Reference $LD_{50}$ (mmol/kg)[1] | Reference $LD_{50}$ (mg/kg)[1] | Observed $LD_{50}$ Toxicity Category[2] (mg/kg) | Log Predicted $LD_{50}$ (mmol/kg)[3] | Predicted $LD_{50}$ (mg/kg)[3] | Predicted $LD_{50}$ Toxicity Category[2] (mg/kg) | Log $IC_{50}$ (mM)[4] |
|---|---|---|---|---|---|---|---|---|---|
| 3T3 | Propranolol | IIVS | 0.197 | 466 | 300-2000 | 1.203 | 356 | 300-2000 | -1.232 |
| 3T3 | Propylparaben | ECBC | 1.546 | 6332 | > 5000 | 1.615 | 291 | 50-300 | -0.940 |
| 3T3 | Propylparaben | FAL | 1.546 | 6332 | > 5000 | 2.390 | 431 | 300-2000 | -0.553 |
| 3T3 | Propylparaben | IIVS | 1.546 | 6332 | > 5000 | 1.481 | 267 | 50-300 | -1.026 |
| 3T3 | Sodium arsenite | ECBC | -0.474 | 44 | 5-50 | 0.362 | 47 | 5-50 | -2.419 |
| 3T3 | Sodium arsenite | FAL | -0.474 | 44 | 5-50 | 0.554 | 72 | 50-300 | -1.998 |
| 3T3 | Sodium arsenite | IIVS | -0.474 | 44 | 5-50 | 0.415 | 54 | 50-300 | -2.284 |
| 3T3 | Sodium chloride | ECBC | 1.841 | 4050 | 2000-5000 | 28.902 | 1689 | 300-2000 | 1.913 |
| 3T3 | Sodium chloride | FAL | 1.841 | 4050 | 2000-5000 | 28.388 | 1659 | 300-2000 | 1.896 |
| 3T3 | Sodium chloride | IIVS | 1.841 | 4050 | 2000-5000 | 29.098 | 1700 | 300-2000 | 1.920 |
| 3T3 | Sodium dichromate dihydrate | ECBC | -0.771 | 50 | 50-300 | 0.274 | 82 | 50-300 | -2.697 |
| 3T3 | Sodium dichromate dihydrate | FAL | -0.771 | 50 | 50-300 | 0.278 | 83 | 50-300 | -2.680 |
| 3T3 | Sodium dichromate dihydrate | IIVS | -0.771 | 50 | 50-300 | 0.262 | 78 | 50-300 | -2.740 |
| 3T3 | Sodium hypochlorite | ECBC | 2.142 | 10328 | > 5000 | 11.970 | 891 | 300-2000 | 1.041 |
| 3T3 | Sodium hypochlorite | FAL | 2.142 | 10328 | > 5000 | 11.430 | 851 | 300-2000 | 0.996 |
| 3T3 | Sodium hypochlorite | IIVS | 2.142 | 10328 | > 5000 | 17.184 | 1279 | 300-2000 | 1.399 |
| 3T3 | Sodium oxalate | ECBC | 0.674 | 633 | 300-2000 | 2.434 | 326 | 300-2000 | -0.535 |
| 3T3 | Sodium oxalate | FAL | 0.674 | 633 | 300-2000 | 2.168 | 291 | 50-300 | -0.649 |
| 3T3 | Sodium oxalate | IIVS | 0.674 | 633 | 300-2000 | 2.552 | 342 | 300-2000 | -0.488 |
| 3T3 | Sodium I fluoride | ECBC | 0.480 | 127 | 50-300 | 4.927 | 207 | 50-300 | 0.163 |
| 3T3 | Sodium I fluoride | FAL | 0.480 | 127 | 50-300 | 5.977 | 251 | 50-300 | 0.354 |
| 3T3 | Sodium I fluoride | IIVS | 0.480 | 127 | 50-300 | 5.601 | 235 | 50-300 | 0.290 |
| 3T3 | Sodium selenate | ECBC | -1.799 | 3 | < 5 | 1.273 | 240 | 50-300 | -1.176 |
| 3T3 | Sodium selenate | FAL | -1.799 | 3 | < 5 | 2.401 | 454 | 300-2000 | -0.548 |
| 3T3 | Sodium selenate | IIVS | -1.799 | 3 | < 5 | 2.025 | 383 | 300-2000 | -0.717 |
| 3T3 | Strychnine | ECBC | -1.725 | 6 | 5-50 | 4.435 | 1483 | 300-2000 | 0.059 |
| 3T3 | Strychnine | FAL | -1.725 | 6 | 5-50 | 2.695 | 901 | 300-2000 | -0.434 |
| 3T3 | Strychnine | IIVS | -1.725 | 6 | 5-50 | 2.271 | 760 | 300-2000 | -0.603 |
| 3T3 | Thallium II sulfate | ECBC | -1.305 | 25 | 5-50 | 0.424 | 214 | 50-300 | -2.263 |
| 3T3 | Thallium II sulfate | FAL | -1.305 | 25 | 5-50 | 0.730 | 368 | 300-2000 | -1.726 |
| 3T3 | Thallium II sulfate | IIVS | -1.305 | 25 | 5-50 | 0.602 | 304 | 300-2000 | -1.916 |
| 3T3 | Trichloroacetic acid | ECBC | 1.505 | 5229 | > 5000 | 8.195 | 1339 | 300-2000 | 0.666 |
| 3T3 | Trichloroacetic acid | FAL | 1.505 | 5229 | > 5000 | 10.085 | 1648 | 300-2000 | 0.872 |
| 3T3 | Trichloroacetic acid | IIVS | 1.505 | 5229 | > 5000 | 8.371 | 1368 | 300-2000 | 0.687 |
| 3T3 | Triethylenemelamine | ECBC | -1.708 | 4 | < 5 | 0.137 | 28 | 5-50 | -3.378 |
| 3T3 | Triethylenemelamine | FAL | -1.708 | 4 | < 5 | 0.474 | 97 | 50-300 | -2.153 |
| 3T3 | Triethylenemelamine | IIVS | -1.708 | 4 | < 5 | 0.183 | 37 | 5-50 | -3.095 |
| 3T3 | Triphenyltin hydroxide | ECBC | -0.047 | 329 | 300-2000 | 0.062 | 23 | 5-50 | -4.161 |
| 3T3 | Triphenyltin hydroxide | FAL | -0.047 | 329 | 300-2000 | 0.051 | 19 | 5-50 | -4.366 |
| 3T3 | Triphenyltin hydroxide | IIVS | -0.047 | 329 | 300-2000 | 0.046 | 17 | 5-50 | -4.459 |
| 3T3 | Valproic acid | ECBC | 0.839 | 996 | 300-2000 | 7.487 | 1080 | 300-2000 | 0.577 |
| 3T3 | Valproic acid | FAL | 0.839 | 996 | 300-2000 | 12.661 | 1826 | 300-2000 | 1.097 |

## Individual Laboratory LD50 Predictions: RC Rat-Only Millimole Regression

| NRU Test Method | Substance | Lab | Log Reference $LD_{50}$ (mmol/kg)[1] | Reference $LD_{50}$ (mg/kg)[1] | Observed $LD_{50}$ Toxicity Category[2] (mg/kg) | Log Predicted $LD_{50}$ (mmol/kg)[3] | Predicted $LD_{50}$ (mg/kg)[3] | Predicted $LD_{50}$ Toxicity Category[2] (mg/kg) | Log $IC_{50}$ (mM)[4] |
|---|---|---|---|---|---|---|---|---|---|
| 3T3 | Valproic acid | IIVS | 0.839 | 996 | 300-2000 | 7.663 | 1105 | 300-2000 | 0.600 |
| 3T3 | Verapamil HCl | ECBC | -0.646 | 111 | 50-300 | 1.257 | 617 | 300-2000 | -1.188 |
| 3T3 | Verapamil HCl | FAL | -0.646 | 111 | 50-300 | 1.302 | 640 | 300-2000 | -1.153 |
| 3T3 | Verapamil HCl | IIVS | -0.646 | 111 | 50-300 | 1.370 | 673 | 300-2000 | -1.103 |
| 3T3 | Xylene | ECBC | 1.643 | 4667 | 2000-5000 | NA | NA | NA | NA |
| 3T3 | Xylene | FAL | 1.643 | 4667 | 2000-5000 | NA | NA | NA | NA |
| 3T3 | Xylene | IIVS | 1.643 | 4667 | 2000-5000 | 9.685 | 1028 | 300-2000 | 0.832 |

## Individual Laboratory LD50 Predictions: RC Rat-Only Millimole Regression

| NRU Test Method | Substance | Lab | Log Reference $LD_{50}$ (mmol/kg)[1] | Reference $LD_{50}$ (mg/kg)[1] | Observed $LD_{50}$ Toxicity Category[2] (mg/kg) | Log Predicted $LD_{50}$ (mmol/kg)[3] | Predicted $LD_{50}$ (mg/kg)[3] | Predicted $LD_{50}$ Toxicity Category[2] (mg/kg) | Log $IC_{50}$ (mM)[4] |
|---|---|---|---|---|---|---|---|---|---|
| NHK | 1,1,1-Trichloroethane | ECBC | 1.957 | 12078 | > 5000 | 25.374 | 3385 | 2000-5000 | 1.784 |
| NHK | 1,1,1-Trichloroethane | FAL | 1.957 | 12078 | > 5000 | NA | NA | NA | NA |
| NHK | 1,1,1-Trichloroethane | IIVS | 1.957 | 12078 | > 5000 | NA | NA | NA | NA |
| NHK | 2-Propanol | ECBC | 1.929 | 5105 | > 5000 | 29.708 | 1786 | 300-2000 | 1.940 |
| NHK | 2-Propanol | FAL | 1.929 | 5105 | > 5000 | 26.850 | 1614 | 300-2000 | 1.840 |
| NHK | 2-Propanol | IIVS | 1.929 | 5105 | > 5000 | 33.892 | 2037 | 2000-5000 | 2.071 |
| NHK | 5-Aminosalicylic acid | ECBC | 1.350 | 3428 | 2000-5000 | 2.025 | 310 | 300-2000 | -0.717 |
| NHK | 5-Aminosalicylic acid | FAL | 1.350 | 3428 | 2000-5000 | 2.994 | 458 | 300-2000 | -0.330 |
| NHK | 5-Aminosalicylic acid | IIVS | 1.350 | 3428 | 2000-5000 | 2.519 | 386 | 300-2000 | -0.501 |
| NHK | Acetaminophen | ECBC | 1.155 | 2162 | 2000-5000 | 7.388 | 1117 | 300-2000 | 0.564 |
| NHK | Acetaminophen | FAL | 1.155 | 2162 | 2000-5000 | 6.693 | 1012 | 300-2000 | 0.466 |
| NHK | Acetaminophen | IIVS | 1.155 | 2162 | 2000-5000 | 7.468 | 1129 | 300-2000 | 0.574 |
| NHK | Acetonitrile | ECBC | 1.942 | 3595 | 2000-5000 | 45.269 | 1858 | 300-2000 | 2.357 |
| NHK | Acetonitrile | FAL | 1.942 | 3595 | 2000-5000 | 46.718 | 1918 | 300-2000 | 2.388 |
| NHK | Acetonitrile | IIVS | 1.942 | 3595 | 2000-5000 | 45.140 | 1853 | 300-2000 | 2.354 |
| NHK | Acetylsalicylic acid | ECBC | 0.922 | 1506 | 300-2000 | 7.243 | 1305 | 300-2000 | 0.544 |
| NHK | Acetylsalicylic acid | FAL | 0.922 | 1506 | 300-2000 | 7.532 | 1357 | 300-2000 | 0.583 |
| NHK | Acetylsalicylic acid | IIVS | 0.922 | 1506 | 300-2000 | 6.598 | 1189 | 300-2000 | 0.452 |
| NHK | Aminopterin | ECBC | -1.799 | 7 | 5-50 | 5.652 | 2490 | 2000-5000 | 0.299 |
| NHK | Aminopterin | FAL | -1.799 | 7 | 5-50 | 4.583 | 2018 | 2000-5000 | 0.091 |
| NHK | Aminopterin | IIVS | -1.799 | 7 | 5-50 | 4.817 | 2122 | 2000-5000 | 0.141 |
| NHK | Amitriptyline HCl | ECBC | 0.046 | 349 | 300-2000 | 0.936 | 294 | 50-300 | -1.480 |
| NHK | Amitriptyline HCl | FAL | 0.046 | 349 | 300-2000 | 0.753 | 236 | 50-300 | -1.696 |
| NHK | Amitriptyline HCl | IIVS | 0.046 | 349 | 300-2000 | 0.957 | 300 | 50-300 | -1.458 |
| NHK | Arsenic III trioxide | ECBC | -0.897 | 25 | 5-50 | 0.989 | 196 | 50-300 | -1.426 |
| NHK | Arsenic III trioxide | FAL | -0.897 | 25 | 5-50 | 0.572 | 113 | 50-300 | -1.968 |
| NHK | Arsenic III trioxide | IIVS | -0.897 | 25 | 5-50 | 1.535 | 304 | 300-2000 | -0.991 |
| NHK | Atropine sulfate | ECBC | 0.071 | 819 | 300-2000 | 1.662 | 1155 | 300-2000 | -0.912 |
| NHK | Atropine sulfate | FAL | 0.071 | 819 | 300-2000 | 1.610 | 1119 | 300-2000 | -0.943 |
| NHK | Atropine sulfate | IIVS | 0.071 | 819 | 300-2000 | 1.630 | 1132 | 300-2000 | -0.932 |
| NHK | Boric acid | ECBC | 1.744 | 3426 | 2000-5000 | 9.755 | 603 | 300-2000 | 0.839 |
| NHK | Boric acid | FAL | 1.744 | 3426 | 2000-5000 | 9.249 | 572 | 300-2000 | 0.786 |
| NHK | Boric acid | IIVS | 1.744 | 3426 | 2000-5000 | 10.120 | 626 | 300-2000 | 0.875 |
| NHK | Busulfan | ECBC | -1.308 | 12 | 5-50 | 4.189 | 1032 | 300-2000 | 0.003 |
| NHK | Busulfan | FAL | -1.308 | 12 | 5-50 | 4.039 | 995 | 300-2000 | -0.033 |
| NHK | Busulfan | IIVS | -1.308 | 12 | 5-50 | 4.633 | 1141 | 300-2000 | 0.102 |
| NHK | Cadmium II chloride | ECBC | -0.132 | 135 | 50-300 | 0.583 | 107 | 50-300 | -1.948 |
| NHK | Cadmium II chloride | FAL | -0.132 | 135 | 50-300 | 0.509 | 93 | 50-300 | -2.083 |
| NHK | Cadmium II chloride | IIVS | -0.132 | 135 | 50-300 | 0.556 | 102 | 50-300 | -1.995 |
| NHK | Caffeine | ECBC | 0.203 | 310 | 300-2000 | 7.731 | 1501 | 300-2000 | 0.609 |
| NHK | Caffeine | FAL | 0.203 | 310 | 300-2000 | 6.715 | 1304 | 300-2000 | 0.469 |
| NHK | Caffeine | IIVS | 0.203 | 310 | 300-2000 | 6.724 | 1306 | 300-2000 | 0.471 |

## Individual Laboratory LD50 Predictions: RC Rat-Only Millimole Regression

| NRU Test Method | Substance | Lab | Log Reference $LD_{50}$ (mmol/kg)[1] | Reference $LD_{50}$ (mg/kg)[1] | Observed $LD_{50}$ Toxicity Category[2] (mg/kg) | Log Predicted $LD_{50}$ (mmol/kg)[3] | Predicted $LD_{50}$ (mg/kg)[3] | Predicted $LD_{50}$ Toxicity Category[2] (mg/kg) | Log $IC_{50}$ (mM)[4] |
|---|---|---|---|---|---|---|---|---|---|
| NHK | Carbamazepine | ECBC | 1.075 | 2807 | 2000-5000 | 2.383 | 563 | 300-2000 | -0.555 |
| NHK | Carbamazepine | FAL | 1.075 | 2807 | 2000-5000 | 3.296 | 779 | 300-2000 | -0.235 |
| NHK | Carbamazepine | IIVS | 1.075 | 2807 | 2000-5000 | 2.350 | 555 | 300-2000 | -0.569 |
| NHK | Carbon tetrachloride | ECBC | 1.391 | 3783 | 2000-5000 | NA | NA | NA | NA |
| NHK | Carbon tetrachloride | FAL | 1.391 | 3783 | 2000-5000 | NA | NA | NA | NA |
| NHK | Carbon tetrachloride | IIVS | 1.391 | 3783 | 2000-5000 | NA | NA | NA | NA |
| NHK | Chloral hydrate | ECBC | 0.586 | 638 | 300-2000 | 3.848 | 636 | 300-2000 | -0.082 |
| NHK | Chloral hydrate | FAL | 0.586 | 638 | 300-2000 | 4.049 | 670 | 300-2000 | -0.031 |
| NHK | Chloral hydrate | IIVS | 0.586 | 638 | 300-2000 | 3.521 | 582 | 300-2000 | -0.169 |
| NHK | Chloramphenicol | ECBC | 1.033 | 3490 | 2000-5000 | 4.042 | 1306 | 300-2000 | -0.033 |
| NHK | Chloramphenicol | FAL | 1.033 | 3490 | 2000-5000 | 4.484 | 1449 | 300-2000 | 0.070 |
| NHK | Chloramphenicol | IIVS | 1.033 | 3490 | 2000-5000 | 4.387 | 1418 | 300-2000 | 0.048 |
| NHK | Citric acid | ECBC | 1.489 | 5929 | > 5000 | 6.478 | 1244 | 300-2000 | 0.434 |
| NHK | Citric acid | FAL | 1.489 | 5929 | > 5000 | 5.147 | 989 | 300-2000 | 0.206 |
| NHK | Citric acid | IIVS | 1.489 | 5929 | > 5000 | 5.965 | 1146 | 300-2000 | 0.352 |
| NHK | Colchicine | ECBC | -1.425 | 15 | 5-50 | 0.029 | 12 | 5-50 | -4.918 |
| NHK | Colchicine | FAL | -1.425 | 15 | 5-50 | 0.035 | 14 | 5-50 | -4.720 |
| NHK | Colchicine | IIVS | -1.425 | 15 | 5-50 | 0.036 | 14 | 5-50 | -4.699 |
| NHK | Cupric sulfate pentahydrate | ECBC | 0.279 | 475 | 300-2000 | 3.697 | 923 | 300-2000 | -0.121 |
| NHK | Cupric sulfate pentahydrate | FAL | 0.279 | 475 | 300-2000 | 3.743 | 935 | 300-2000 | -0.109 |
| NHK | Cupric sulfate pentahydrate | IIVS | 0.279 | 475 | 300-2000 | 3.846 | 960 | 300-2000 | -0.082 |
| NHK | Cycloheximide | ECBC | -2.148 | 2 | < 5 | 0.096 | 27 | 5-50 | -3.732 |
| NHK | Cycloheximide | FAL | -2.148 | 2 | < 5 | 0.132 | 37 | 5-50 | -3.418 |
| NHK | Cycloheximide | IIVS | -2.148 | 2 | < 5 | 0.110 | 31 | 5-50 | -3.601 |
| NHK | Dibutyl phthalate | ECBC | 1.504 | 8892 | > 5000 | 1.513 | 421 | 300-2000 | -1.005 |
| NHK | Dibutyl phthalate | FAL | 1.504 | 8892 | > 5000 | 1.763 | 491 | 300-2000 | -0.854 |
| NHK | Dibutyl phthalate | IIVS | 1.504 | 8892 | > 5000 | 1.372 | 382 | 300-2000 | -1.102 |
| NHK | Dichlorvos | ECBC | -0.576 | 59 | 50-300 | 0.992 | 219 | 50-300 | -1.423 |
| NHK | Dichlorvos | FAL | -0.576 | 59 | 50-300 | 1.163 | 257 | 50-300 | -1.265 |
| NHK | Dichlorvos | IIVS | -0.576 | 59 | 50-300 | 1.171 | 259 | 50-300 | -1.258 |
| NHK | Diethyl phthalate | ECBC | 1.622 | 9311 | > 5000 | 3.745 | 832 | 300-2000 | -0.108 |
| NHK | Diethyl phthalate | FAL | 1.622 | 9311 | > 5000 | 2.244 | 499 | 300-2000 | -0.615 |
| NHK | Diethyl phthalate | IIVS | 1.622 | 9311 | > 5000 | 3.876 | 861 | 300-2000 | -0.074 |
| NHK | Digoxin | ECBC | -1.441 | 28 | 5-50 | 0.023 | 18 | 5-50 | -5.164 |
| NHK | Digoxin | FAL | -1.441 | 28 | 5-50 | 0.003 | 2 | < 5 | -7.209 |
| NHK | Digoxin | IIVS | -1.441 | 28 | 5-50 | 0.020 | 15 | 5-50 | -5.293 |
| NHK | Dimethylformamide | ECBC | 1.861 | 5305 | > 5000 | 35.157 | 2570 | 2000-5000 | 2.107 |
| NHK | Dimethylformamide | FAL | 1.861 | 5305 | > 5000 | 32.491 | 2375 | 2000-5000 | 2.029 |
| NHK | Dimethylformamide | IIVS | 1.861 | 5305 | > 5000 | 29.746 | 2174 | 2000-5000 | 1.942 |
| NHK | Diquat dibromide monohydrate | ECBC | -0.355 | 160 | 50-300 | 0.547 | 198 | 50-300 | -2.012 |
| NHK | Diquat dibromide monohydrate | FAL | -0.355 | 160 | 50-300 | 0.692 | 251 | 50-300 | -1.779 |
| NHK | Diquat dibromide monohydrate | IIVS | -0.355 | 160 | 50-300 | 0.567 | 205 | 50-300 | -1.976 |

## Individual Laboratory LD50 Predictions: RC Rat-Only Millimole Regression

| NRU Test Method | Substance | Lab | Log Reference $LD_{50}$ (mmol/kg)[1] | Reference $LD_{50}$ (mg/kg)[1] | Observed $LD_{50}$ Toxicity Category[2] (mg/kg) | Log Predicted $LD_{50}$ (mmol/kg)[3] | Predicted $LD_{50}$ (mg/kg)[3] | Predicted $LD_{50}$ Toxicity Category[2] (mg/kg) | Log $IC_{50}$ (mM)[4] |
|---|---|---|---|---|---|---|---|---|---|
| NHK | Disulfoton | ECBC | -1.739 | 5 | < 5 | 3.092 | 849 | 300-2000 | -0.298 |
| NHK | Disulfoton | FAL | -1.739 | 5 | < 5 | 6.640 | 1822 | 300-2000 | 0.458 |
| NHK | Disulfoton | IIVS | -1.739 | 5 | < 5 | 3.475 | 954 | 300-2000 | -0.182 |
| NHK | Endosulfan | ECBC | -1.165 | 28 | 5-50 | 0.512 | 208 | 50-300 | -2.077 |
| NHK | Endosulfan | FAL | -1.165 | 28 | 5-50 | 0.336 | 137 | 50-300 | -2.493 |
| NHK | Endosulfan | IIVS | -1.165 | 28 | 5-50 | 0.419 | 170 | 50-300 | -2.276 |
| NHK | Epinephrine bitartrate | ECBC | -1.921 | 4 | < 5 | 2.614 | 871 | 300-2000 | -0.464 |
| NHK | Epinephrine bitartrate | FAL | -1.921 | 4 | < 5 | 2.216 | 739 | 300-2000 | -0.628 |
| NHK | Epinephrine bitartrate | IIVS | -1.921 | 4 | < 5 | 2.161 | 720 | 300-2000 | -0.652 |
| NHK | Ethanol | ECBC | 2.391 | 11324 | > 5000 | 40.823 | 1881 | 300-2000 | 2.255 |
| NHK | Ethanol | FAL | 2.391 | 11324 | > 5000 | 47.812 | 2203 | 2000-5000 | 2.411 |
| NHK | Ethanol | IIVS | 2.391 | 11324 | > 5000 | 44.757 | 2062 | 2000-5000 | 2.346 |
| NHK | Ethylene glycol | ECBC | 2.062 | 7161 | > 5000 | 69.735 | 4329 | 2000-5000 | 2.785 |
| NHK | Ethylene glycol | FAL | 2.062 | 7161 | > 5000 | 78.619 | 4881 | 2000-5000 | 2.903 |
| NHK | Ethylene glycol | IIVS | 2.062 | 7161 | > 5000 | 71.258 | 4424 | 2000-5000 | 2.806 |
| NHK | Fenpropathrin | ECBC | -0.664 | 76 | 50-300 | 0.564 | 197 | 50-300 | -1.982 |
| NHK | Fenpropathrin | FAL | -0.664 | 76 | 50-300 | 0.449 | 157 | 50-300 | -2.207 |
| NHK | Fenpropathrin | IIVS | -0.664 | 76 | 50-300 | 0.414 | 145 | 50-300 | -2.287 |
| NHK | Gibberellic acid | ECBC | 1.241 | 6039 | > 5000 | 10.509 | 3640 | 2000-5000 | 0.912 |
| NHK | Gibberellic acid | FAL | 1.241 | 6039 | > 5000 | 10.670 | 3696 | 2000-5000 | 0.927 |
| NHK | Gibberellic acid | IIVS | 1.241 | 6039 | > 5000 | 10.470 | 3627 | 2000-5000 | 0.909 |
| NHK | Glutethimide | ECBC | 0.441 | 600 | 300-2000 | 3.828 | 832 | 300-2000 | -0.087 |
| NHK | Glutethimide | FAL | 0.441 | 600 | 300-2000 | 3.738 | 812 | 300-2000 | -0.110 |
| NHK | Glutethimide | IIVS | 0.441 | 600 | 300-2000 | 3.792 | 824 | 300-2000 | -0.096 |
| NHK | Glycerol | ECBC | 2.332 | 19770 | > 5000 | 54.557 | 5024 | > 5000 | 2.542 |
| NHK | Glycerol | FAL | 2.332 | 19770 | > 5000 | 40.626 | 3741 | 2000-5000 | 2.250 |
| NHK | Glycerol | IIVS | 2.332 | 19770 | > 5000 | 52.042 | 4793 | 2000-5000 | 2.495 |
| NHK | Haloperidol | ECBC | -0.057 | 330 | 300-2000 | 0.543 | 204 | 50-300 | -2.019 |
| NHK | Haloperidol | FAL | -0.057 | 330 | 300-2000 | 0.525 | 197 | 50-300 | -2.053 |
| NHK | Haloperidol | IIVS | -0.057 | 330 | 300-2000 | 0.513 | 193 | 50-300 | -2.076 |
| NHK | Hexachlorophene | ECBC | -0.696 | 82 | 50-300 | 0.061 | 25 | 5-50 | -4.179 |
| NHK | Hexachlorophene | FAL | -0.696 | 82 | 50-300 | 0.074 | 30 | 5-50 | -3.984 |
| NHK | Hexachlorophene | IIVS | -0.696 | 82 | 50-300 | 0.055 | 22 | 5-50 | -4.285 |
| NHK | Lactic acid | ECBC | 1.606 | 3635 | 2000-5000 | 13.423 | 1209 | 300-2000 | 1.155 |
| NHK | Lactic acid | FAL | 1.606 | 3635 | 2000-5000 | 13.575 | 1223 | 300-2000 | 1.166 |
| NHK | Lactic acid | IIVS | 1.606 | 3635 | 2000-5000 | 13.520 | 1218 | 300-2000 | 1.162 |
| NHK | Lindane | ECBC | -0.464 | 100 | 50-300 | 1.258 | 366 | 300-2000 | -1.188 |
| NHK | Lindane | FAL | -0.464 | 100 | 50-300 | 1.357 | 395 | 300-2000 | -1.113 |
| NHK | Lindane | IIVS | -0.464 | 100 | 50-300 | 1.154 | 335 | 300-2000 | -1.273 |
| NHK | Lithium I carbonate | ECBC | 0.902 | 590 | 300-2000 | 8.770 | 648 | 300-2000 | 0.733 |
| NHK | Lithium I carbonate | FAL | 0.902 | 590 | 300-2000 | 9.491 | 701 | 300-2000 | 0.812 |
| NHK | Lithium I carbonate | IIVS | 0.902 | 590 | 300-2000 | 9.956 | 736 | 300-2000 | 0.859 |

## Individual Laboratory LD50 Predictions: RC Rat-Only Millimole Regression

| NRU Test Method | Substance | Lab | Log Reference $LD_{50}$ (mmol/kg)[1] | Reference $LD_{50}$ (mg/kg)[1] | Observed $LD_{50}$ Toxicity Category[2] (mg/kg) | Log Predicted $LD_{50}$ (mmol/kg)[3] | Predicted $LD_{50}$ (mg/kg)[3] | Predicted $LD_{50}$ Toxicity Category[2] (mg/kg) | Log $IC_{50}$ (mM)[4] |
|---|---|---|---|---|---|---|---|---|---|
| NHK | Meprobamate | ECBC | 0.803 | 1387 | 300-2000 | 7.204 | 1573 | 300-2000 | 0.539 |
| NHK | Meprobamate | FAL | 0.803 | 1387 | 300-2000 | 2.925 | 639 | 300-2000 | -0.353 |
| NHK | Meprobamate | IIVS | 0.803 | 1387 | 300-2000 | 6.609 | 1443 | 300-2000 | 0.454 |
| NHK | Mercury II chloride | ECBC | -0.830 | 40 | 5-50 | 0.829 | 225 | 50-300 | -1.600 |
| NHK | Mercury II chloride | FAL | -0.830 | 40 | 5-50 | 0.745 | 202 | 50-300 | -1.706 |
| NHK | Mercury II chloride | IIVS | -0.830 | 40 | 5-50 | 0.745 | 202 | 50-300 | -1.705 |
| NHK | Methanol | ECBC | 2.434 | 8710 | > 5000 | NA | NA | NA | NA |
| NHK | Methanol | FAL | 2.434 | 8710 | > 5000 | 19.871 | 637 | 300-2000 | 1.543 |
| NHK | Methanol | IIVS | 2.434 | 8710 | > 5000 | 26.159 | 838 | 300-2000 | 1.815 |
| NHK | Nicotine | ECBC | -0.367 | 70 | 50-300 | 3.259 | 529 | 300-2000 | -0.246 |
| NHK | Nicotine | FAL | -0.367 | 70 | 50-300 | 3.666 | 595 | 300-2000 | -0.129 |
| NHK | Nicotine | IIVS | -0.367 | 70 | 50-300 | 3.511 | 570 | 300-2000 | -0.172 |
| NHK | Paraquat | ECBC | -0.443 | 93 | 50-300 | 2.000 | 514 | 300-2000 | -0.729 |
| NHK | Paraquat | FAL | -0.443 | 93 | 50-300 | 2.654 | 683 | 300-2000 | -0.449 |
| NHK | Paraquat | IIVS | -0.443 | 93 | 50-300 | 2.092 | 538 | 300-2000 | -0.684 |
| NHK | Parathion | ECBC | -1.679 | 6 | 5-50 | 1.608 | 468 | 300-2000 | -0.945 |
| NHK | Parathion | FAL | -1.679 | 6 | 5-50 | 1.531 | 446 | 300-2000 | -0.993 |
| NHK | Parathion | IIVS | -1.679 | 6 | 5-50 | 1.502 | 437 | 300-2000 | -1.012 |
| NHK | Phenobarbital | ECBC | -0.016 | 224 | 50-300 | 6.691 | 1554 | 300-2000 | 0.466 |
| NHK | Phenobarbital | FAL | -0.016 | 224 | 50-300 | 5.009 | 1163 | 300-2000 | 0.179 |
| NHK | Phenobarbital | IIVS | -0.016 | 224 | 50-300 | 5.167 | 1200 | 300-2000 | 0.210 |
| NHK | Phenol | ECBC | 0.908 | 762 | 300-2000 | 3.333 | 314 | 300-2000 | -0.224 |
| NHK | Phenol | FAL | 0.908 | 762 | 300-2000 | 4.159 | 391 | 300-2000 | -0.005 |
| NHK | Phenol | IIVS | 0.908 | 762 | 300-2000 | 3.905 | 367 | 300-2000 | -0.067 |
| NHK | Phenylthiourea | ECBC | -1.705 | 3 | < 5 | 6.100 | 928 | 300-2000 | 0.374 |
| NHK | Phenylthiourea | FAL | -1.705 | 3 | < 5 | 6.355 | 967 | 300-2000 | 0.415 |
| NHK | Phenylthiourea | IIVS | -1.705 | 3 | < 5 | 5.347 | 814 | 300-2000 | 0.244 |
| NHK | Physostigmine | ECBC | -1.741 | 5 | < 5 | 3.325 | 916 | 300-2000 | -0.226 |
| NHK | Physostigmine | FAL | -1.741 | 5 | < 5 | 1.593 | 439 | 300-2000 | -0.954 |
| NHK | Physostigmine | IIVS | -1.741 | 5 | < 5 | 3.088 | 850 | 300-2000 | -0.299 |
| NHK | Potassium cyanide | ECBC | -0.956 | 7 | 5-50 | 2.916 | 190 | 50-300 | -0.356 |
| NHK | Potassium cyanide | FAL | -0.956 | 7 | 5-50 | 3.732 | 243 | 50-300 | -0.112 |
| NHK | Potassium cyanide | IIVS | -0.956 | 7 | 5-50 | 2.304 | 150 | 50-300 | -0.589 |
| NHK | Potassium I chloride | ECBC | 1.575 | 2802 | 2000-5000 | 19.648 | 1465 | 300-2000 | 1.531 |
| NHK | Potassium I chloride | FAL | 1.575 | 2802 | 2000-5000 | 18.553 | 1383 | 300-2000 | 1.475 |
| NHK | Potassium I chloride | IIVS | 1.575 | 2802 | 2000-5000 | 17.651 | 1316 | 300-2000 | 1.425 |
| NHK | Procainamide HCl | ECBC | 0.856 | 1950 | 300-2000 | 8.770 | 2383 | 2000-5000 | 0.733 |
| NHK | Procainamide HCl | FAL | 0.856 | 1950 | 300-2000 | 9.531 | 2590 | 2000-5000 | 0.816 |
| NHK | Procainamide HCl | IIVS | 0.856 | 1950 | 300-2000 | 10.075 | 2738 | 2000-5000 | 0.871 |
| NHK | Propranolol | ECBC | 0.197 | 466 | 300-2000 | 1.699 | 503 | 300-2000 | -0.890 |
| NHK | Propranolol | FAL | 0.197 | 466 | 300-2000 | 1.806 | 534 | 300-2000 | -0.830 |
| NHK | Propranolol | IIVS | 0.197 | 466 | 300-2000 | 1.495 | 442 | 300-2000 | -1.017 |

## Individual Laboratory LD50 Predictions: RC Rat-Only Millimole Regression

| NRU Test Method | Substance | Lab | Log Reference $LD_{50}$ (mmol/kg)[1] | Reference $LD_{50}$ (mg/kg)[1] | Observed $LD_{50}$ Toxicity Category[2] (mg/kg) | Log Predicted $LD_{50}$ (mmol/kg)[3] | Predicted $LD_{50}$ (mg/kg)[3] | Predicted $LD_{50}$ Toxicity Category[2] (mg/kg) | Log $IC_{50}$ (mM)[4] |
|---|---|---|---|---|---|---|---|---|---|
| NHK | Propylparaben | ECBC | 1.546 | 6332 | > 5000 | 1.520 | 274 | 50-300 | -1.000 |
| NHK | Propylparaben | FAL | 1.546 | 6332 | > 5000 | 1.534 | 276 | 50-300 | -0.991 |
| NHK | Propylparaben | IIVS | 1.546 | 6332 | > 5000 | 1.354 | 244 | 50-300 | -1.115 |
| NHK | Sodium arsenite | ECBC | -0.474 | 44 | 5-50 | 0.438 | 57 | 50-300 | -2.231 |
| NHK | Sodium arsenite | FAL | -0.474 | 44 | 5-50 | 0.292 | 38 | 5-50 | -2.631 |
| NHK | Sodium arsenite | IIVS | -0.474 | 44 | 5-50 | 0.353 | 46 | 5-50 | -2.444 |
| NHK | Sodium chloride | ECBC | 1.841 | 4050 | 2000-5000 | 25.437 | 1487 | 300-2000 | 1.787 |
| NHK | Sodium chloride | FAL | 1.841 | 4050 | 2000-5000 | 11.979 | 700 | 300-2000 | 1.042 |
| NHK | Sodium chloride | IIVS | 1.841 | 4050 | 2000-5000 | 25.063 | 1465 | 300-2000 | 1.772 |
| NHK | Sodium dichromate dihydrate | ECBC | -0.771 | 50 | 50-300 | 0.307 | 92 | 50-300 | -2.583 |
| NHK | Sodium dichromate dihydrate | FAL | -0.771 | 50 | 50-300 | 0.312 | 93 | 50-300 | -2.565 |
| NHK | Sodium dichromate dihydrate | IIVS | -0.771 | 50 | 50-300 | 0.268 | 80 | 50-300 | -2.718 |
| NHK | Sodium hypochlorite | ECBC | 2.142 | 10328 | > 5000 | 16.924 | 1260 | 300-2000 | 1.384 |
| NHK | Sodium hypochlorite | FAL | 2.142 | 10328 | > 5000 | 13.934 | 1037 | 300-2000 | 1.192 |
| NHK | Sodium hypochlorite | IIVS | 2.142 | 10328 | > 5000 | 16.183 | 1205 | 300-2000 | 1.340 |
| NHK | Sodium oxalate | ECBC | 0.674 | 633 | 300-2000 | 6.390 | 856 | 300-2000 | 0.420 |
| NHK | Sodium oxalate | FAL | 0.674 | 633 | 300-2000 | 6.091 | 816 | 300-2000 | 0.373 |
| NHK | Sodium oxalate | IIVS | 0.674 | 633 | 300-2000 | 6.372 | 854 | 300-2000 | 0.418 |
| NHK | Sodium I fluoride | ECBC | 0.480 | 127 | 50-300 | 4.446 | 187 | 50-300 | 0.061 |
| NHK | Sodium I fluoride | FAL | 0.480 | 127 | 50-300 | 4.318 | 181 | 50-300 | 0.032 |
| NHK | Sodium I fluoride | IIVS | 0.480 | 127 | 50-300 | 4.644 | 195 | 50-300 | 0.105 |
| NHK | Sodium selenate | ECBC | -1.799 | 3 | < 5 | 1.010 | 191 | 50-300 | -1.405 |
| NHK | Sodium selenate | FAL | -1.799 | 3 | < 5 | 1.351 | 255 | 50-300 | -1.117 |
| NHK | Sodium selenate | IIVS | -1.799 | 3 | < 5 | 1.147 | 217 | 50-300 | -1.279 |
| NHK | Strychnine | ECBC | -1.725 | 6 | 5-50 | 2.277 | 761 | 300-2000 | -0.601 |
| NHK | Strychnine | FAL | -1.725 | 6 | 5-50 | 1.780 | 595 | 300-2000 | -0.844 |
| NHK | Strychnine | IIVS | -1.725 | 6 | 5-50 | 1.892 | 633 | 300-2000 | -0.784 |
| NHK | Thallium II sulfate | ECBC | -1.305 | 25 | 5-50 | 0.129 | 65 | 50-300 | -3.440 |
| NHK | Thallium II sulfate | FAL | -1.305 | 25 | 5-50 | 0.118 | 60 | 50-300 | -3.525 |
| NHK | Thallium II sulfate | IIVS | -1.305 | 25 | 5-50 | 0.110 | 55 | 50-300 | -3.602 |
| NHK | Trichloroacetic acid | ECBC | 1.505 | 5229 | > 5000 | 5.790 | 946 | 300-2000 | 0.323 |
| NHK | Trichloroacetic acid | FAL | 1.505 | 5229 | > 5000 | 6.976 | 1140 | 300-2000 | 0.507 |
| NHK | Trichloroacetic acid | IIVS | 1.505 | 5229 | > 5000 | 6.129 | 1002 | 300-2000 | 0.379 |
| NHK | Triethylenemelamine | ECBC | -1.708 | 4 | < 5 | 0.487 | 99 | 50-300 | -2.126 |
| NHK | Triethylenemelamine | FAL | -1.708 | 4 | < 5 | 0.547 | 112 | 50-300 | -2.012 |
| NHK | Triethylenemelamine | IIVS | -1.708 | 4 | < 5 | 0.560 | 114 | 50-300 | -1.988 |
| NHK | Triphenyltin hydroxide | ECBC | -0.047 | 329 | 300-2000 | 0.057 | 21 | 5-50 | -4.250 |
| NHK | Triphenyltin hydroxide | FAL | -0.047 | 329 | 300-2000 | 0.030 | 11 | 5-50 | -4.885 |
| NHK | Triphenyltin hydroxide | IIVS | -0.047 | 329 | 300-2000 | 0.042 | 15 | 5-50 | -4.552 |
| NHK | Valproic acid | ECBC | 0.839 | 996 | 300-2000 | 6.936 | 1000 | 300-2000 | 0.501 |
| NHK | Valproic acid | FAL | 0.839 | 996 | 300-2000 | 8.303 | 1197 | 300-2000 | 0.679 |
| NHK | Valproic acid | IIVS | 0.839 | 996 | 300-2000 | 6.722 | 969 | 300-2000 | 0.470 |

## Individual Laboratory LD50 Predictions: RC Rat-Only Millimole Regression

| NRU Test Method | Substance | Lab | Log Reference $LD_{50}$ (mmol/kg)[1] | Reference $LD_{50}$ (mg/kg)[1] | Observed $LD_{50}$ Toxicity Category[2] (mg/kg) | Log Predicted $LD_{50}$ (mmol/kg)[3] | Predicted $LD_{50}$ (mg/kg)[3] | Predicted $LD_{50}$ Toxicity Category[2] (mg/kg) | Log $IC_{50}$ (mM)[4] |
|---|---|---|---|---|---|---|---|---|---|
| NHK | Verapamil HCl | ECBC | -0.646 | 111 | 50-300 | 1.653 | 812 | 300-2000 | -0.917 |
| NHK | Verapamil HCl | FAL | -0.646 | 111 | 50-300 | 1.830 | 899 | 300-2000 | -0.817 |
| NHK | Verapamil HCl | IIVS | -0.646 | 111 | 50-300 | 1.731 | 850 | 300-2000 | -0.871 |
| NHK | Xylene | ECBC | 1.643 | 4665 | 2000-5000 | NA | NA | NA | NA |
| NHK | Xylene | FAL | 1.643 | 4665 | 2000-5000 | NA | NA | NA | NA |
| NHK | Xylene | IIVS | 1.643 | 4665 | 2000-5000 | 7.995 | 849 | 300-2000 | 0.642 |

Abbreviations: 3T3=Mouse fibroblast 3T3 cell line; NHK=Normal human epidermal keratinocytes; NRU=Neutral red uptake; ECBC=U.S. Army Edgewood Chemical Biological Center; FAL=Fund for the Replacement of Animals in Medical Experiments Alternatives Laboratory; IIVS=Institute for In Vitro Sciences.

[1]Reference rat oral $LD_{50}$ values from **Table 4-2**. Reference values were developed from rat acute oral $LD_{50}$ studies located using literature searches, secondary references, and electronic database searches.

[2]Globally Harmonized System (GHS) hazard classification (UN 2005):

| Abbreviation | Category | Oral $LD_{50}$ Limits |
|---|---|---|
| <5 | 1 | $LD_{50} \leq 5$ mg/kg |
| 5-50 | 2 | $5 < LD_{50} \leq 50$ mg/kg |
| 50-300 | 3 | $50 < LD_{50} \leq 300$ mg/kg |
| 300-2000 | 4 | $300 < LD_{50} \leq 2000$ mg/kg |
| 2000-5000 | 5 | $2000 < LD_{50} \leq 5000$ mg/kg |
| >5000 | Unclassified | $LD_{50} > 5000$ mg/kg |

[3]$LD_{50}$ determined using NRU $IC_{50}$ value in RC rat-only millimole regression: Log $LD_{50}$ (mmol/kg) = 0.439 log $IC_{50}$ (mM) + 0.621.

[4]$IC_{50}$ values are the geometric mean $IC_{50}$ values for each substance in each lab.

# Appendix L

## Outlier Information

**L1 Outlier Characterization for the 3T3 and NHK NRU Test Methods with the RC Millimole Regression ..... L-3**

**L2 Discordant Substances for GHS Acute Oral Toxicity Category Predictions Using the 3T3 and NHK NRU Test Methods and RC Rat-Only Regressions..... L-9**

**L3 Analysis of Outliers by Halle (1998, 2003) for the RC Millimole Regression..... L-17**

***[This Page Intentionally Left Blank]***

# Appendix L1

## Outlier Characterization for the 3T3 and NHK NRU Test Methods with the RC Millimole Regression

***[This Page Intentionally Left Blank]***

## L.1 Outlier Analysis for the 3T3 and NHK NRU Test Methods and RC Millimole Regression

The RC millimole regression and each *in vitro* NRU test method were used to identify outlier substances among the reference substances tested in the validation study (i.e., those for which the rodent $LD_{50}$ was not accurately predicted by the *in vitro* NRU $IC_{50}$) (see **Section 6.2**). The outliers, identified for each test method in **Table 6-3**, were evaluated for common characteristics that may assist in determining the types of chemicals that are not suited for use in the 3T3 and NHK NRU test methods to determine starting doses for acute systemic toxicity test methods.

A number of physico-chemical characteristics were evaluated for their frequency of occurrence among the 28 outlier substances for the 3T3 NRU test method and 31 outlier substances for the NHK NRU test method versus the entire set of reference substances. The frequency of occurrence of outliers versus the total number of reference substances for each category of each characteristic examined is shown in **Table L1-1**.

## Table L1-1 Outliers per Category and NRU Test Method

| Category | 3T3 NRU Test Method[1] | | NHK NRU Test Method[2] | |
|---|---|---|---|---|
| | Number of Outliers | Total Substances in Category | Number of Outliers | Total Substances in Category |
| **Boiling Point (BP) [in degrees C]** | | | | |
| No information | 13 | 34 | 13 | 34 |
| < 100 | 1 | 6 | 2 | 7 |
| 100-200 | 1 | 5 | 2 | 5 |
| 200-300 | 3 | 4 | 3 | 4 |
| 300-400 | 5 | 6 | 4 | 6 |
| 465 | 1 | 1 | 1 | 1 |
| 960 | 0 | 1 | 0 | 1 |
| 1500 | 0 | 1 | 0 | 1 |
| decompose, sublime, or BPs were provided at less than atmospheric pressure | 4 | 12 | 6 | 12 |
| **Molecular Weight (g/mol)** | | | | |
| < 100 | 3 | 14 | 4 | 15 |
| 100-200 | 6 | 18 | 9 | 18 |
| 200-300 | 12 | 20 | 12 | 20 |
| 300-400 | 3 | 11 | 3 | 11 |
| 400-500 | 2 | 4 | 3 | 4 |
| 500-600 | 1 | 1 | 0 | 1 |
| 600-700 | 0 | 1 | 0 | 1 |
| 700-800 | 1 | 1 | 0 | 1 |
| **$IC_{50}$ (mM)** | | | | |
| ≤ 0.0001 | 0 | 3 | 0 | 4 |
| 0.0001 – 0.001 | 1 | 1 | 1 | 2 |
| 0.001 – 0.01 | 1 | 4 | 3 | 7 |
| 0.01 – 0.1 | 8 | 14 | 5 | 8 |
| 0.1 – 1 | 13 | 21 | 12 | 19 |
| 1 – 10 | 3 | 13 | 7 | 19 |
| 10 – 100 | 1 | 9 | 2 | 7 |
| > 100 | 1 | 5 | 1 | 5 |
| **pH** | | | | |
| < 7.1 | 0 | 0 | 0 | 6 |
| 7.1 | 0 | 0 | 0 | 0 |
| 7.2 | 0 | 0 | 1 | 1 |
| 7.3 | 0 | 0 | 0 | 0 |
| 7.4 | 0 | 0 | 1 | 4 |
| 7.5 | 0 | 0 | 4 | 7 |
| < 7.6 | 0 | 9 | 0 | 0 |
| 7.6 | 0 | 0 | 4 | 7 |
| 7.7 | 1 | 1 | 8 | 22 |
| 7.8 | 0 | 1 | 11 | 17 |
| 7.9 | 2 | 6 | 0 | 3 |
| 8.0 | 5 | 11 | 0 | 1 |
| 8.1 | 10 | 18 | 0 | 0 |
| 8.2 | 3 | 6 | 1 | 1 |
| 8.3 | 3 | 8 | 0 | 0 |

## Table L1-1 Outliers per Category and NRU Test Method

| Category | 3T3 NRU Test Method[1] | | NHK NRU Test Method[2] | |
|---|---|---|---|---|
| | Number of Outliers | Total Substances in Category | Number of Outliers | Total Substances in Category |
| 8.4 | 1 | 5 | 0 | 0 |
| 8.5 | 0 | 1 | 1 | 1 |
| > 8.5 | 3 | 4 | 0 | 1 |
| **log $K_{ow}$** | | | | |
| < -4 | 0 | 1 | 1 | 1 |
| > -4 to < -3 | 0 | 1 | 0 | 1 |
| > -3 to < -2 | 0 | 0 | 0 | 0 |
| -2 to -1 | 1 | 5 | 1 | 5 |
| -1 to 0 | 3 | 6 | 5 | 7 |
| 0 to 1 | 4 | 7 | 3 | 7 |
| 1 to 2 | 5 | 13 | 5 | 13 |
| 2 to 3 | 1 | 4 | 1 | 4 |
| 3 to 4 | 5 | 8 | 5 | 8 |
| 4 to 5 | 2 | 2 | 2 | 2 |
| 5 to 6 | 1 | 2 | 1 | 2 |
| 6 to 7 | 0 | 1 | 0 | 1 |
| No information | 6 | 20 | 7 | 20 |
| **Chemical Class** | | | | |
| ***Organic Compounds*** | | | | |
| Acyclic hydrocarbon | 1 | 1 | 1 | 1 |
| Alcohol | 3 | 9 | 4 | 10 |
| Alkalies | 0 | 1 | 0 | 1 |
| Amide | 1 | 3 | 0 | 3 |
| Amine | 2 | 3 | 2 | 3 |
| Carbohydrate | 1 | 1 | 0 | 1 |
| Carboxylic acid | 4 | 14 | 6 | 14 |
| Cyclic hydrocarbon | 0 | 3 | 1 | 3 |
| Ester | 1 | 1 | 1 | 1 |
| Ether | 1 | 1 | 1 | 1 |
| Halogenated hydrocarbon | 1 | 3 | 0 | 3 |
| Heterocyclic compound | 7 | 14 | 10 | 14 |
| Ketone | 0 | 1 | 0 | 1 |
| Lipids | 0 | 1 | 0 | 1 |
| Nitrile | 1 | 2 | 1 | 2 |
| Nitro compound | 0 | 1 | 0 | 1 |
| Sodium compound | 0 | 1 | 1 | 1 |
| Sulfur compound | 5 | 5 | 5 | 5 |
| Organometallic compound | 0 | 1 | 0 | 1 |
| Organophosphorous compound | 3 | 3 | 3 | 5 |
| Phenol | 1 | 5 | 2 | 5 |
| Polycyclic compound | 1 | 5 | 0 | 5 |
| Urea | 1 | 1 | 1 | 1 |
| ***Inorganic Compounds*** | | | | |
| Arsenical | 1 | 2 | 1 | 2 |
| Boron compound | 0 | 1 | 0 | 1 |
| Cadmium compound | 0 | 1 | 0 | 1 |
| Chlorine compound | 2 | 5 | 2 | 5 |

## Table L1-1 Outliers per Category and NRU Test Method

| Category | 3T3 NRU Test Method[1] | | NHK NRU Test Method[2] | |
|---|---|---|---|---|
| | Number of Outliers | Total Substances in Category | Number of Outliers | Total Substances in Category |
| Chromium compound | 0 | 1 | 0 | 1 |
| Fluorine compound | 0 | 1 | 0 | 1 |
| Inorganic acid | 0 | 1 | 0 | 1 |
| Inorganic carbon compound | 0 | 1 | 0 | 1 |
| Lithium compound | 0 | 1 | 0 | 1 |
| Mercury compound | 1 | 1 | 1 | 1 |
| Metal | 1 | 2 | 0 | 2 |
| Nitrogen compound | 1 | 1 | 1 | 1 |
| Oxygen compound | 1 | 1 | 1 | 1 |
| Potassium compound | 1 | 2 | 1 | 2 |
| Selenium compound | 1 | 1 | 1 | 1 |
| Sodium compound | 2 | 6 | 2 | 6 |
| Sulfur compound | 1 | 2 | 0 | 2 |
| **Substance Physical Form** | | | | |
| Solid | 21 | 54 | 22 | 54 |
| Liquid | 7 | 16 | 9 | 17 |

Abbreviations: NRU=Neutral red uptake; 3T3=BALB/c 3T3 fibroblasts; NHK=Normal human epidermal keratinocytes; BP=Boiling point; $K_{ow}$= Octanol:water partition coefficient.

[1]28 discordant chemicals (i.e., outliers) are characterized for the 3T3 NRU test method by counting the number of outliers in each category and comparing to the total number of chemicals in the category. Analysis excludes carbon tetrachloride and methanol since no $IC_{50}$ values were obtained. Total chemicals = 70.

[2]31 discordant chemicals (i.e., outliers) are characterized for the NHK NRU test method by counting the number of outliers in each category and comparing to the total number of chemicals in the category. Analysis excludes carbon tetrachloride since no $IC_{50}$ values were obtained. Total chemicals = 71.

# Appendix L2

## Discordant Substances for GHS Acute Oral Toxicity Category Predictions Using the 3T3 and NHK NRU Test Methods and RC Rat-Only Regressions

***[This Page Intentionally Left Blank]***

## L.2 Discordant Substances for GHS Acute Toxicity Category Predictions Using the 3T3 and NHK NRU Test Methods and RC Rat-Only Regressions

This appendix provides a more detailed discussion of the discordant substances identified for the GHS acute oral toxicity category predictions using the NRU test methods and the RC rat-only regressions evaluated in **Section 6.4.**

### L.2.1 Discordant Substances for Prediction of GHS Acute Oral Toxicity Category by the 3T3 and NHK NRU Test Methods and the RC Rat-Only Millimole Regression

**Table L2-1** identifies the discordant substances for which the *in vitro* predicted GHS toxicity category (using the 3T3 and NHK NRU test methods with the RC rat-only millimole regression) did not match the GHS toxicity category assigned based on the reference rat oral $LD_{50}$ data. For the 3T3 NRU test method, the toxicity category was underpredicted for 23 (34%) and overpredicted for 23 (34%) of the 46 discordant substances. Of the 23 substances for which toxicity was underpredicted,

- 15 (65%) were underpredicted by one toxicity category
- 2 (9%) were underpredicted by two toxicity categories
- 6 (26%) were underpredicted by three toxicity categories

For the 23 substances for which toxicity was overpredicted,

- 14 (61%) were overpredicted by one toxicity category
- 9 (39%) were overpredicted by two toxicity categories

For the NHK NRU test method, toxicity was underpredicted for 21 (54%) and overpredicted for 27 (46%) of the 48 discordant substances. Of the 21 substances for which toxicity was underpredicted,

- 12 (57%) were underpredicted by one toxicity category
- 5 (24%) were underpredicted by two toxicity categories
- 4 (19%) were underpredicted by three toxicity categories

For the 27 substances for which toxicity was overpredicted,

- 18 (67%) were overpredicted by one toxicity category
- 9 (33%) were overpredicted by two toxicity categories

**Table L2-1 Discordant Substances[1] for the Prediction of GHS Acute Oral Toxicity Categories by the 3T3 and NHK NRU Test Methods and the RC Rat-Only Millimole Regression[2]**

| *In Vivo* GHS Toxicity Category[3] (mg/kg) | 3T3 NRU Test Method | | NHK NRU Test Method | |
|---|---|---|---|---|
| | Toxicity Overpredicted | Toxicity Underpredicted | Toxicity Overpredicted | Toxicity Underpredicted |
| $LD_{50}$ <5 | | Cycloheximide (1)<br>Disulfoton (3)<br>Phenylthiourea (3)<br>Physostigmine (3)<br>Sodium selenate (3)<br>Triethylenemelamine (1) | | Cycloheximide (1)<br>Disulfoton (3)<br>Phenylthiourea (3)<br>Physostigmine (3)<br>Sodium selenate (2)<br>Triethylenemelamine (2) |
| 5 < $LD_{50}$ ≤50 | | Arsenic trioxide (1)<br>Busulfan (2)<br>Digoxin (3)<br>Endosulfan (1)<br>Mercury chloride (1)<br>Parathion (2)<br>Potassium cyanide (1)<br>Sodium arsenite (1)<br>Strychnine (3)<br>Thallium sulfate (1) | | Aminopterin (3)<br>Arsenic trioxide (1)<br>Busulfan (2)<br>Endosulfan (1)<br>Mercury chloride (1)<br>Parathion (2)<br>Potassium cyanide (1)<br>Strychnine (2)<br>Thallium sulfate (1) |
| 50 < $LD_{50}$ ≤300 | | Dichlorvos (1)<br>Fenpropathrin (1)<br>Lindane (1)<br>Nicotine (1)<br>Paraquat (1)<br>Phenobarbital (1)<br>Verapamil HCl (1) | Hexachlorophene (1) | Lindane (1)<br>Nicotine (1)<br>Paraquat (1)<br>Phenobarbital (1)<br>Verapamil HCl (1) |
| 300 < $LD_{50}$ ≤2000 | Amitriptyline HCl (1)<br>Haloperidol (1)<br>Triphenyltin hydroxide (2) | | Amitriptyline HCl (1)<br>Haloperidol (1)<br>Triphenyltin hydroxide (2) | Procainamide HCl (1) |
| 2000 < $LD_{50}$ ≤5000 | Acetaminophen (1)<br>Acetonitrile (1)<br>5-Aminosalicylic acid (1)<br>Boric acid (1)<br>Carbamazepine (1)<br>Chloramphenicol (1) | | Acetaminophen (1)<br>Acetonitrile (1)<br>5-Aminosalicylic acid (1)<br>Boric acid (1)<br>Carbamazepine (1)<br>Chloramphenicol (1) | |

| ***In Vivo* GHS Toxicity Category[3] (mg/kg)** | **3T3 NRU Test Method** | | **NHK NRU Test Method** | |
|---|---|---|---|---|
| | **Toxicity Overpredicted** | **Toxicity Underpredicted** | **Toxicity Overpredicted** | **Toxicity Underpredicted** |
| | Lactic acid (1)<br>Potassium chloride (1)<br>Sodium chloride (1)<br>Xylene (1) | | Lactic acid (1)<br>Potassium chloride (1)<br>Sodium chloride (1)<br>Xylene (1) | |
| $LD_{50}$ >5000 | Citric acid (2)<br>Dibutyl phthalate (2)<br>Diethyl phthalate (2)<br>Dimethylformamide (2)<br>Ethanol (2)<br>Ethylene glycol (1)<br>Glycerol (1)<br>2-Propanol (2)<br>Sodium hypochlorite (2)<br>Trichloroacetic acid (2) | | Citric acid (2)<br>Dibutyl phthalate (2)<br>Diethyl phthalate (2)<br>Dimethylformamide (2)<br>Ethanol (1)<br>Gibberellic Acid (1)<br>Glycerol (1)<br>Methanol (2)<br>2-Propanol (2)<br>Sodium hypochlorite (2)<br>Trichloroacetic acid (2)<br>1,1,1-Trichloroethane (1) | |

Abbreviations: GHS=Globally Harmonized System of Classification and Labelling of Chemicals (UN 2005); 3T3=BALB/c 3T3 fibroblasts; NHK=Normal human epidermal keratinocytes; NRU=Neutral red uptake; RC=Registry of Cytotoxicity

[1]Substances for which the *in vitro* predicted GHS acute oral toxicity category was different from the category assigned to the substance based on reference rat oral $LD_{50}$ data. Numbers in parentheses indicate the number of categories different. Three substances were excluded because no rat $LD_{50}$ was identified: epinephrine bitartrate, colchicine, and propylparaben. Carbon tetrachloride was excluded from the 3T3 and NHK NRU analyses because no laboratory attained sufficient toxicity for the calculation of an $IC_{50}$. Methanol was excluded from the 3T3 analysis because no laboratory attained sufficient toxicity for the calculation of an $IC_{50}$.

[2]The RC rat-only millimole regression is log $LD_{50}$ (mmol/kg) = 0.439 log $IC_{50}$ (mM) + 0.621.

[3]Reference rat oral $LD_{50}$ values from **Table 4-2**.

### L.2.2 Discordant Substances for Prediction of Toxicity Category by the 3T3 and NHK NRU Test Methods and the RC Rat-Only Weight Regression

**Table L2-2** shows the discordant substances for which the *in vitro* predicted GHS toxicity category (using the 3T3 and NHK NRU test methods with the RC rat-only weight regression) did not match that based on the reference rat oral $LD_{50}$ data. The two *in vitro* NRU cytotoxicity test methods over- and under-predicted the GHS toxicity category for a similar number of substances. For the 3T3 NRU test method, the GHS toxicity category of 22 of 46 (48%) discordant substances was overpredicted, with:

- 16 (73%) overpredicted by one GHS toxicity category
- 6 (27%) overpredicted by two GHS toxicity categories

The toxicity of 24 substances (52%) was underpredicted by this test method, with:

- 13 (54%) underpredicted by one GHS toxicity category
- 7 (29%) underpredicted by two GHS toxicity categories
- 4 (17%) underpredicted by three GHS toxicity categories

For the NHK NRU test method, the GHS toxicity category of 25 (53%) of the 47 discordant substances was overpredicted. Of these,

- 18 (72%) were overpredicted by one GHS toxicity category
- 7 (28%) were overpredicted by two GHS toxicity categories

For this assay, the toxicity of 22 (47%) of the discordant substances was underpredicted, with

- 12 (55%) underpredicted by one GHS toxicity category
- 7 (32%) underpredicted by two GHS toxicity categories
- 3 (14%) underpredicted by three toxicity categories

**Table L2-2 Discordant Substances[1] for the Prediction of GHS Acute Oral Toxicity Categories by the 3T3 and NHK NRU Test Methods and the RC Rat-Only Weight Regression[2]**

| *In Vivo* GHS Category[3] (mg/kg) | 3T3 NRU Test Method | | NHK NRU Test Method | |
|---|---|---|---|---|
| | Toxicity Overpredicted | Toxicity Underpredicted | Toxicity Overpredicted | Toxicity Underpredicted |
| $LD_{50} < 5$ | | Cycloheximide (2)<br>Disulfoton (3)<br>Phenylthiourea (3)<br>Physostigmine (3)<br>Sodium selenate (3)<br>Triethylenemelamine (2) | | Cycloheximide (1)<br>Disulfoton (3)<br>Phenylthiourea (3)<br>Physostigmine (3)<br>Sodium selenate (2)<br>Triethylenemelamine (2) |
| $5 < LD_{50} \leq 50$ | | Arsenic trioxide (1)<br>Busulfan (2)<br>Digoxin (2)<br>Endosulfan (1)<br>Mercury chloride (1)<br>Parathion (2)<br>Potassium cyanide (2)<br>Sodium arsenite (1)<br>Strychnine (2)<br>Thallium sulfate (1) | | Aminopterin (2)<br>Arsenic trioxide (1)<br>Busulfan (2)<br>Endosulfan (1)<br>Mercury chloride (1)<br>Parathion (2)<br>Potassium cyanide (2)<br>Sodium arsenite (1)<br>Strychnine (2)<br>Thallium sulfate (1) |
| $50 < LD_{50} \leq 300$ | | Dichlorvos (1)<br>Fenpropathrin (1)<br>Lindane (1)<br>Nicotine (1)<br>Paraquat (1)<br>Phenobarbital (1)<br>Sodium fluoride (1)<br>Verapamil HCl (1) | Hexachlorophene (1) | Lindane (1)<br>Nicotine (1)<br>Paraquat (1)<br>Phenobarbital (1)<br>Sodium fluoride (1)<br>Verapamil HCl (1) |
| $300 < LD_{50} \leq 2000$ | Amitriptyline HCl (1)<br>Haloperidol (1)<br>Propranolol HCl (1)<br>Triphenyltin hydroxide (2) | | Amitriptyline HCl (1)<br>Haloperidol (1)<br>Triphenyltin hydroxide (2) | |
| $2000 < LD_{50} \leq 5000$ | Acetaminophen (1)<br>5-Aminosalicylic acid (1)<br>Boric acid (1)<br>Carbamazepine (1)<br>Chloramphenicol (1) | | Acetaminophen (1)<br>5-Aminosalicylic acid (1)<br>Boric acid (1)<br>Carbamazepine (1)<br>Chloramphenicol (1) | |

| ***In Vivo* GHS Category[3] (mg/kg)** | **3T3 NRU Test Method** | | **NHK NRU Test Method** | |
|---|---|---|---|---|
| | **Toxicity Overpredicted** | **Toxicity Underpredicted** | **Toxicity Overpredicted** | **Toxicity Underpredicted** |
| | Xylene (1) | | Lactic acid (1)<br>Potassium chloride (1)<br>Sodium chloride (1)<br>Xylene (1) | |
| $LD_{50}$ >5000 | Citric acid (2)<br>Dibutyl phthalate (2)<br>Diethyl phthalate (2)<br>Dimethylformamide (1)<br>Ethanol (1)<br>Ethylene glycol (1)<br>Gibberellic acid (1)<br>Glycerol (1)<br>2-Propanol (1)<br>Sodium hypochlorite (2)<br>Trichloroacetic acid (2)<br>1,1,1-Trichloroethane (1) | | Citric acid (2)<br>Dibutyl phthalate (2)<br>Diethyl phthalate (2)<br>Dimethylformamide (1)<br>Ethanol (1)<br>Gibberellic acid (1)<br>Glycerol (1)<br>Methanol (2)<br>2-Propanol (1)<br>Sodium hypochlorite (2)<br>Trichloroacetic acid (2)<br>1,1,1-Trichloroethane (1) | |

Abbreviations: GHS=Globally Harmonized System of Classification and Labelling of Chemicals (UN 2005); 3T3=BALB/c 3T3 fibroblasts; NHK=Normal human epidermal keratinocytes; NRU=Neutral red uptake; RC=Registry of Cytotoxicity

[1]Substances for which the *in vitro* predicted GHS acute oral toxicity category was different from the category assigned to the substance based on reference rat oral $LD_{50}$ data. Numbers in parentheses indicate the number of categories different. Three substances were excluded because no rat $LD_{50}$ was identified: epinephrine bitartrate, colchicine, and propylparaben. Carbon tetrachloride was excluded from the 3T3 and NHK NRU analyses because no laboratory attained sufficient toxicity for the calculation of an $IC_{50}$. Methanol was excluded from the 3T3 analysis because no laboratory attained sufficient toxicity for the calculation of an $IC_{50}$.

[2]The RC rat-only weight regression is $\log LD_{50}$ (mg/kg) = 0.372 $\log IC_{50}$ (µg/mL) + 2.024.

[3]Reference rat oral $LD_{50}$ values from **Table 4-2**.

# Appendix L3

## Analysis of Outliers by Halle (1998, 2003) for the RC Millimole Regression

***[This Page Intentionally Left Blank]***

## L.3 Analysis of Outliers for the RC Millimole Regression

The RC millimole regression was constructed from the *in vitro* $IC_{50X}$ cytotoxicity data from multiple cell lines and the *in vivo* acute toxicity data from rats and mice (i.e., $LD_{50}$ values) for 347 chemicals (Halle 1998, 2003). Halle (1998, 2003) investigated the 95 (27.4%) chemicals for which the observed log $LD_{50}$ values were greater than 0.699 (i.e., 0.5 log) from predicted log $LD_{50}$ values. Of the 95 outliers, 46 were positive outliers and 49 were negative outliers. The positive outliers have $IC_{50X}$ values that predict a far higher *in vivo* toxicity (i.e., lower $LD_{50}$) than the actual animal experiment. The negative outliers are more important since the $IC_{50X}$ values predict lower toxicity (i.e. higher $LD_{50}$) than the observed *in vivo* toxicity. It seems that Halle (1998, 2003) was not concerned about the positive outliers since the prediction erred in a health protective direction. Halle (1998, 2003) was much more concerned about trying to explain the reasons for the negative outliers since the error was in a nonconservative direction.

Halle (1998, 2003) investigated three factors that could have explained the negative outliers.

1. Variation in the oral $LD_{50}$ values.
   They reported oral $LD_{50}$ values for a particular chemical might vary by a factor of 4 to 14 even when experiments were highly standardized. $LD_{50}$ values were found from other sources for 23 of the 95 outliers. They found that the variations in the $LD_{50}$ values (difference between the RTECS® value and the "new" value found for the 23 chemicals) were larger for the negative outliers than for the positive outliers.
2. Species-specificity of the oral $LD_{50}$ values.
   Halle (1998, 2003) compared an $IC_{50x}$–$LD_{50}$ regression using mouse $LD_{50}$ values (242 values) with a regression using rat $LD_{50}$ values (285 values) and found no significant difference between the two regressions. The RC millimole regression with 347 chemicals has 285 rat values and 62 mouse values and is not statistically different from either the rat or mouse regressions.
3. The cell culture(s) used may have been unsuitable for the detection of cytotoxic potential or it may have been unable to simulate the complex

process of toxicity *in vivo.* Halle (1998, 2003) expected, *a priori*, that three classes of compounds, insecticides (**Table L3-1**), neurotoxins (**Table L3-2**), and those requiring metabolic activation for toxicity **(Table L3-3**), would not fit the RC millimole regression (i.e., cytotoxicity data would not predict *in vivo* toxicity). Sixty-two of the 347 chemicals belong to these three classes. Twenty-three (37.1%) of the 62 chemicals were negative outliers. Of the 23, 10 were insecticides, five were neurotoxins, and eight required metabolic activation. No positive outliers were identified in the three classes.

Of the 49 negative outliers, 23 (46.9%) belonged to the three classes of concern. Examination of these classes showed that the RC millimole prediction was accurate (i.e., predicted log $LD_{50}$ [mmol/kg] was within 0.699 of observed log $LD_{50}$ in [mmol/kg]) for 50% of the insecticides (**Table L3-1**) and chemicals that required metabolic activation (**Table L3-3**). For neurotoxins (**Table L3-2**), the results were even better, since 21 (80.8%) fell within the prediction interval. Halle (1998, 2003) felt that the ability to predict the acute $LD_{50}$ for 50% of the insecticides and xenobiotics requiring metabolic activation and for 81% of the neurotoxic xenobiotics was sufficiently accurate for practical purposes.

Of the 49 negative outliers in the RC millimole regression, 23 (46.9%) of these belonged to the three classes of concern that may explain the false negative $IC_{50X}$ values. Findings were contrary to Halle's assumption that *in vitro* cytotoxicity would not predict *in vivo* toxicity for these types of chemicals. The RC millimole prediction of $LD_{50}$ was applicable to 50% of the insecticides and chemicals that required metabolic activation. For neurotoxic chemicals the results were even better, since 21 (80.8%) fell within the prediction interval. Halle felt that the ability to predict the acute $LD_{50}$ for 50% of the insecticides and chemicals requiring metabolic activation and for 81% of the neurotoxic chemicals was sufficiently accurate for practical purposes.

In separate analyses, Halle (1998, 2003) considered the physicochemical properties of chemicals (i.e., molecular weight and the octanol/water partition coefficient) as independent

variables in a multiple regression analysis, but they did not improve the prediction of $LD_{50}$ by $IC_{50}$.

## L3-1 The Error of Prediction[a] of 20 of The Most Important Insecticides in the RC Ordered According to Their Chemical Characteristics[b]

| Chemical Class | RC No | Name | $LD_{50}$ Error of Prediction[a] |
|---|---|---|---|
| **Chlorinated hydrocarbon** | | | |
| | 26 | Kelthane | 0.340 |
| | 40 | Chlordan | -0.046 |
| | 43 | Aldrin | **-1.074**[b] |
| | 61 | DDT | **-0.775** |
| | 167 | DDD | -0.378 |
| | 185 | Heptachlor | **-1.050** |
| | 195 | DDA | 0.133 |
| | 197 | DDE | 0.251 |
| | 207 | Dieldrin | **-1.223** |
| | 223 | Lindane | **-1.043** |
| **Organophosphorus compounds** | | | |
| | 49 | Parathion | **-2.339** |
| | 51 | Disulfoton | **-2.346** |
| | 67 | Malathion | 0.106 |
| | 75 | Trichlorfon | -0.136 |
| | 96 | Cygon | **-0.848** |
| **Carbamate compounds** | | | |
| | 73 | Carbaryl | -0.279 |
| | 186 | Zineb | **1.185** |
| **Other compounds** | | | |
| | 134 | Rotenone | 0.583 |
| | 173 | Pentachlorophenol | **-0.720** |
| | 235 | Paraquat | **-1.019** |

Abbreviations: RC=Registry of Cytotoxicity; No=RC number; DDA=*p,p*'-DDA [2,2-bis(4-chlorophenyl)acetic acid]; DDD=*p,p*'-DDD [1,1-dichloro-2,2-bis(4-chlorophenyl)ethane]; DDE= *p,p*'-DDE [1,1-dichloro-2,2-bis(4-chlorophenyl)ethylene]; DDT=*p,p*'-DDT [1,1,1-trichloro-2,2-bis(2-chlorophenyl-4-chlorophenyl)ethane]

[a] Defined as observed log $LD_{50}$ (mmol/kg) - predicted log $LD_{50}$ (mmol/kg).

[b] Modified from Table 10 of Halle (1998, 2003).

**Bold numbers**: outliers (i.e., observed log $LD_{50}$ [mmol/kg] - predicted log $LD_{50}$ [mmol/kg] > 0.699).

**Table L3-2 The Error of Prediction [a] of 26 Neurotoxic Xenobiotics in the RC Ordered According to Their *In Vivo* Potency[b]**

| Chemical Class | RC No | Name | $LD_{50}$ Error of Prediction[a] |
|---|---|---|---|
| **Sedative, hypnotic, CNS depressants** | | | |
| | 69 | Secobarbital sod. | -0.651 |
| | 83 | Thiopental | -0.119 |
| | 84 | Amobarbital | -0.335 |
| | 87 | Pentobarbital sodium | -0.654 |
| | 101 | Gluthetimide | -0.270 |
| | 118 | Phenobarbital | **-1.035**[b] |
| | 247 | (+)-Thalidomide | -0.397 |
| | 264 | Chloral hydrate | -0.349 |
| | 317 | Barbital sodium | -0.591 |
| **Antidepressant** | | | |
| | 38 | Imipramine HCl | -0.093 |
| | 90 | Iproniazid | -0.273 |
| | 183 | Amitriptyline | 0.021 |
| **Antipsychotic, anxiolytic** | | | |
| | 27 | Chlorpromazine | -0.176 |
| | 44 | Hydroxyzine HCl | 0.248 |
| | 63 | Diazepam | 0.116 |
| | 170 | Thioridazine HCl | -0.013 |
| **Stimulants** | | | |
| | 112 | Caffeine | **-0.815** |
| | 262 | Amphetamine sulfate | **-1.579** |
| **Anticonvulsants** | | | |
| | 82 | Diphenylhydantoin | -0.551 |
| **Analgetic (general anesthesia)** | | | |
| | 229 | Dextropropoxyphene HCl | **-1.150** |
| **Anticholinergic** | | | |
| | 251 | Scopolamine * HBr | -0.123 |
| | 296 | Homatropine methylbromide | -0.532 |
| **Other Neurotoxins (not insecticide)** | | | |
| | 102 | Acrylamide | -0.338 |
| | 137 | Triethyltin chloride | **-0.852** |
| | 142 | Methylmercury chloride | 0.105 |
| | 316 | Toluene | 0.571 |

Abbreviations: RC=Registry of Cytotoxicity; No=RC number; CNS=Central nervous system.
[a] Defined as observed log $LD_{50}$ (mmol/kg) - predicted log $LD_{50}$ (mmol/kg).
[b] Modified from Table 11 of Halle (1998, 2003).
**Bold numbers**: outliers (i.e., observed log $LD_{50}$ [mmol/kg] - predicted log $LD_{50}$ [mmol/kg] >0.699).

## Table L3-3 The Error of Prediction[a] of the 16 Xenobiotics in the RC that Require Metabolic Activation[b]

| RC No | Name | $LD_{50}$ Error of Prediction[a] |
|---|---|---|
| 13 | Cycloheximide | **-1.370**[b] |
| 33 | p-Chloromercuribenzoic acid | **-1.077** |
| 37 | Aflatoxin $B_1$ | **-1.783** |
| 68 | 2.4-Dinitrophenol | **-1.128** |
| 97 | Phenacetin | 0.292 |
| 109 | Frusemide | 0.109 |
| 113 | Acetaminophen | 0.386 |
| 116 | Cyclophosphamide * $H_2O$ | **-1.310** |
| 123 | Isoniazid | -0.332 |
| 125 | Carbon tetrachloride | 0.229 |
| 192 | 1.3-Bis(2-chloroethyl)-1-nitrosourea | **-1.176** |
| 260 | Coumarin | -0.427 |
| 273 | Bromobenzene | 0.374 |
| 279 | Thioacetamide | -0.294 |
| 281 | 1.2-Dibromomethane | **-1.106** |
| 292 | Allylalcohol | **-0.952** |

Abbreviations: RC=Registry of Cytotoxicity; No=RC number.
[a] Defined as observed log $LD_{50}$ (mmol/kg) - predicted log $LD_{50}$ (mmol/kg).
[b] Modified from Table 12 of Halle (1998, 2003).
**Bold numbers**: outliers (i.e., observed log $LD_{50}$ [mmol/kg] - predicted log $LD_{50}$ [mmol/kg] >0.699.

***[This Page Intentionally Left Blank]***

# Appendix M

## Acute Oral Toxicity Test Guidelines

**M1 OECD UDP Test Guideline .....M-3**

**M2 EPA UDP Test Guideline.....M-31**

**M3 OECD ATC Method Test Guideline.....M-71**

**M4 OECD FDP Test Guideline.....M-87**

**M5 OECD Guidance on Acute Oral Toxicity Testing..... M-103**

***[This Page Intentionally Left Blank]***

# Appendix M1

## OECD UDP Test Guideline

***[This Page Intentionally Left Blank]***

**OECD/OCDE** **425**

Adopted:
17th December 2001

# OECD GUIDELINE FOR TESTING OF CHEMICALS

## Acute Oral Toxicity – Up-and-Down Procedure

## INTRODUCTION

1. OECD guidelines for the Testing of Chemicals are periodically reviewed in the light of scientific progress or changing assessment practices. The concept of the up-and-down testing approach was first described by Dixon and Mood (1)(2)(3)(4). In 1985, Bruce proposed to use an up-and-down procedure (UDP) for the determination of acute toxicity of chemicals (5). There exist several variations of the up-and-down experimental design for estimating an LD50. This guideline is based on the procedure of Bruce as adopted by ASTM in 1987 (6) and revised in 1990. A study comparing the results obtained with the UDP, the conventional LD50 test and the Fixed Dose Procedure (FDP, Guideline 420) was published in 1995 (7). Since the early papers of Dixon and Mood, papers have continued to appear in the biometrical and applied literature, examining the best conditions for use of the approach (8)(9)(10)(11). Based on the recommendations of several expert meetings in 1999, an additional revision was considered timely because: i) international agreement had been reached on harmonised LD50 cut-off values for the classification of chemical substances, ii) testing in one sex (usually females) is generally considered sufficient, and iii) in order for a point estimate to be meaningful, there is a need to estimate confidence intervals (CI).

2. The test procedure described in this Guideline is of value in minimizing the number of animals required to estimate the acute oral toxicity of a chemical. In addition to the estimation of LD50 and confidence intervals, the test allows the observation of signs of toxicity. Revision of Test Guideline 425 was undertaken concurrently with revisions to the Test Guidelines 420 and 423.

3. Guidance on the selection of the most appropriate test method for a given purpose can be found in the Guidance Document on Oral Toxicity Testing (12). This Guidance Document also contains additional information on the conduct and interpretation of Guideline 425.

4. Definitions used in the context of this Guideline are set out in Annex 1.

## INITIAL CONSIDERATIONS

5. The testing laboratory should consider all available information on the test substance prior to conducting the study. Such information will include the identity and chemical structure of the test substance; its physical chemical properties; the results of any other *in vitro* or *in vivo* toxicity tests on the substance; toxicological data on structurally related substances or similar mixtures; and the anticipated use(s) of the substance. This information is useful to determine the relevance of the test for the protection of human health and the environment, and will help in the selection of an appropriate starting dose.

6. The method permits estimation of an LD50 with a confidence interval and the results allow a substance to be ranked and classified according to the Globally Harmonised System for the classification of chemicals which cause acute toxicity (16).

7. When no information is available to make a preliminary estimate of the LD50 and the slope of the dose-response curve, results of computer simulations have suggested that starting near 175 mg/kg and using half-log units (corresponding to a dose progression of factor 3.2) between doses will produce the best results. This starting dose should be modified if the substance is likely to be highly toxic. The half-log spacing provides for a more efficient use of animals, and increases accuracy in the prediction of the LD50 value. Because the method has a bias toward the starting dose, it is essential that initial dosing occur below the estimated LD50. (See paragraphs 32 and Annex 2 for discussion of dose sequences and starting values). However, for chemicals with large variability (i.e., shallow dose-response slopes), bias can still be introduced in the lethality estimates and the LD50 will have a large statistical error, similar to other acute toxicity methods. To correct for this, the main test includes a stopping rule keyed to properties of the estimate rather than a fixed number of test observations (see paragraph 33).

8. The method is easiest to apply to materials that produce death within one or two days. The method would not be practical to use when considerably delayed death (five days or more) can be expected.

9. Computers are used to facilitate animal-by-animal calculations that establish testing sequences and provide final estimates.

10. Test substances, at doses that are known to cause marked pain and distress due to corrosive or severely irritant actions, need not be administered. Moribund animals or animals obviously in pain or showing signs of severe and enduring distress shall be humanely killed, and are considered in the interpretation of the test results in the same way as animals that died on test. Criteria for making the decision to kill moribund or severely suffering animals, and guidance on the recognition of predictable or impending death are the subject of a separate OECD Guidance Document (13).

11. A limit test can be used efficiently to identify chemicals that are likely to have low toxicity.

## PRINCIPLE OF THE LIMIT TEST

12. The Limit Test is a sequential test that uses a maximum of 5 animals. A test dose of 2000, or exceptionally 5000 mg/kg, may be used. The procedures for testing at 2000 and 5000 mg/kg are slightly different (see paragraphs 23-25 for limit test at 2000 mg/kg and paragraphs 26-30 for limit test at 5000 mg/kg). The selection of a sequential test plan increases the statistical power and also has been made to intentionally bias the procedure towards rejection of the limit test for compounds with LD50s near the limit dose; i.e., to err on the side of safety. As with any limit test protocol, the probability of correctly classifying a compound will decrease as the actual LD50 more nearly resembles the limit dose.

## PRINCIPLE OF THE MAIN TEST

13. The main test consists of a single ordered dose progression in which animals are dosed, one at a time, at a minimum of 48-hour intervals. The first animal receives a dose a step below the level of the best estimate of the LD50. If the animal survives, the dose for the next animal is increased by [a factor of] 3.2 times the original dose; if it dies, the dose for the next animal is decreased by a similar dose progression. (Note: 3.2 is the default factor corresponding to a dose progression of one half log unit). Paragraph 32 provides further guidance for choice of dose spacing factor.) Each animal should be observed carefully for up to 48 hours before making a decision on whether and how much to dose the next animal. That decision is based on the 48-hour survival pattern of all the animals up to that time. (See paragraphs 31 and 35 on choice of dosing interval). A combination of stopping criteria is used to keep the

number of animals low while adjusting the dosing pattern to reduce the effect of a poor starting value or low slope (see paragraph 34). Dosing is stopped when one of these criteria is satisfied (see paragraphs 33 and 41), at which time an estimate of the LD50 and a confidence interval are calculated for the test based on the status of all the animals at termination. For most applications, testing will be completed with only 4 animals after initial reversal in animal outcome. The LD50 is calculated using the method of maximum likelihood (14)(15). (See paragraphs 41 and 43.)

14. The results of the main test procedure serve as the starting point for a computational procedure to provide a confidence interval estimate where feasible. A description of the basis for this CI is outlined in paragraph 45.

## DESCRIPTION OF THE METHOD

### Selection of animals species

15. The preferred rodent species is the rat although other rodent species may be used. Normally female rats are used (12). This is because literature surveys of conventional LD50 tests show that usually there is little difference in sensitivity between sexes, but in those cases where differences are observed, females are generally slightly more sensitive (7). However, if knowledge of the toxicological or toxicokinetic properties of structurally related chemicals indicates that males are likely to be more sensitive then this sex should be used. When the test is conducted in males, adequate justification should be provided.

16. Healthy young adult animals of commonly used laboratory strains should be employed. Females should be nulliparous and non-pregnant. At the commencement of its dosing, each animal should be between 8 and 12 weeks old and its weight should fall in an interval within ± 20 % of the mean initial weight of any previously dosed animals.

### Housing and feeding conditions

17. The temperature in the experimental animal room should be 22°C (± 3°C). Although the relative humidity should be at least 30 % and preferably not exceed 70 % other than during room cleaning the aim should be 50-60%. Lighting should be artificial, the sequence being 12 hours light and 12 hours dark. The animals are housed individually. For feeding, conventional rodent laboratory diets may be used with an unlimited supply of drinking water.

### Preparation of animals

18. The animals are randomly selected, marked to permit individual identification, and kept in their cages for at least 5 days prior to dosing to allow for acclimatisation to the laboratory conditions. As with other sequential test designs, care must be taken to ensure that animals are available in the appropriate size and age range for the entire study.

### Preparation of doses

19. In general test substances should be administered in a constant volume over the range of doses to be tested by varying the concentration of the dosing preparation. Where a liquid end product or mixture is to be tested, however, the use of the undiluted test substance, i.e., at a constant concentration, may be more relevant to the subsequent risk assessment of that substance, and is a requirement of some regulatory

authorities. In either case, the maximum dose volume for administration must not be exceeded. The maximum volume of liquid that can be administered at one time depends on the size of the test animal. In rodents, the volume should not normally exceed 1 mL/100g of body weight; however in the case of aqueous solutions, 2 mL/100g body weight can be considered. With respect to the formulation of the dosing preparations, the use of an aqueous solution/suspension/emulsion is recommended wherever possible, followed in order of preference by a solution/suspension/emulsion in oil (e.g. corn oil) and then possibly solution in other vehicles. For vehicles other than water the toxicological characteristics of the vehicle should be known. Doses must be prepared shortly prior to administration unless the stability of the preparation over the period during which it will be used is known and shown to be acceptable.

## PROCEDURE

### Administration of doses

20. The test substance is administered in a single dose by gavage using a stomach tube or a suitable intubation cannula. In the unusual circumstance that a single dose is not possible, the dose may be given in smaller fractions over a period not exceeding 24 hours.

21. Animals should be fasted prior to dosing (e.g., with the rat, food but not water should be withheld overnight; with the mouse, food but not water should be withheld for 3-4 hours). Following the period of fasting, the animals should be weighed and the test substance administered. The fasted body weight of each animal is determined and the dose is calculated according to the body weight. After the substance has been administered, food may be withheld for a further 3-4 hours in rats or 1-2 hours in mice. Where a dose is administered in fractions over a period of time, it may be necessary to provide the animals with food and water depending on the length of the period.

### Limit test and main test

22. The limit test is primarily used in situations where the experimenter has information indicating that the test material is likely to be nontoxic, i.e., having toxicity below regulatory limit doses. Information about the toxicity of the test material can be gained from knowledge about similar tested compounds or similar tested mixtures or products, taking into consideration the identity and percentage of components known to be of toxicological significance. In those situations where there is little or no information about its toxicity, or in which the the test material is expected to be toxic, the main test should be performed.

### Limit test

#### Limit test at 2000 mg/kg

23. Dose one animal at the test dose. If the animal dies, conduct the main test to determine the LD50. If the animal survives, dose four additional animals sequentially so that a total of five animals are tested. However, if three animals die, the limit test is terminated and the main test is performed. The LD50 is greater than 2000 mg/kg if three or more animals survive. If an animal unexpectedly dies late in the study, and there are other survivors, it is appropriate to stop dosing and observe all animals to see if other animals will also die during a similar observation period (see paragraph 31 for initial observation period). Late deaths should be counted the same as other deaths. The results are evaluated as follows (O=survival, X=death).

24. The LD50 is less than the test dose (2000 mg/kg) when three or more animals die.

O XO XX
O OX XX
O XX OX
O XX X

If a third animal dies, conduct the main test.

25. Test five animals. The LD50 is greater than the test dose (2000 mg/kg) when three or more animals survive.

O OO OO
O OO XO
O OO OX
O OO XX
O XO XO
O XO OO/X
O OX XO
O OX OO/X
O XX OO

**Limit Test at 5000 mg/kg**

26. Exceptionally, and only when justified by specific regulatory needs, the use of a dose at 5000 mg/kg may be considered (see Annex 4). For reasons of animal welfare concern, testing of animals in GHS Category 5 ranges (2000-5000mg/kg) is discouraged and should only be considered when there is a strong likelihood that results of such a test have a direct relevance for protecting human or animal health or the environment.

27. Dose one animal at the test dose. If the animal dies, conduct the main test to determine the LD50. If the animal survives, dose two additional animals. If both animals survive, the LD50 is greater than the limit dose and the test is terminated (i.e. carried to full 14-day observation without dosing of further animals).

28. If one or both animals die, then dose an additional two animals, one at a time. If an animal unexpectedly dies late in the study, and there are other survivors, it is appropriate to stop dosing and observe all animals to see if other animals will also die during a similar observation period (see paragraph 10 for initial observation period). Late deaths should be counted the same as other deaths. The results are evaluated as follows (O=survival, X=death, and U=Unnecessary).

29. The LD50 is less than the test dose (5000 mg/kg) when three or more animals die.

O XO XX
O OX XX
O XX OX
O XX X

30. The LD50 is greater than the test dose (5000 mg/kg) when three or more animals survive.

O OO
O XO XO

O XO O
O OX XO
O OX O
O XX OO

**Main test**

31. Single animals are dosed in sequence usually at 48 h intervals. However, the time intervals between dosing is determined by the onset, duration, and severity of toxic signs. Treatment of an animal at the next dose should be delayed until one is confident of survival of the previously dosed animal. The time interval may be adjusted as appropriate, e.g., in case of inconclusive response. The test is simpler to implement when a single time interval is used for making sequential dosing decisions. Nevertheless, it is not necessary to recalculate dosing or likelihood-ratios if the time interval changes midtest. For selecting the starting dose, all available information, including information on structurally related substances and results of any other toxicity tests on the test material, should be used to approximate the LD50 as well as the slope of the dose-response curve.

32. The first animal is dosed a step below the best preliminary estimate of the LD50. If the animal survives, the second animal receives a higher dose. If the first animal dies or appears moribund, the second animal receives a lower dose. The dose progression factor should be chosen to be the antilog of 1/(the estimated slope of the dose-response curve) (a progression of 3.2 corresponds to a slope of 2) and should remain constant throughout testing. When there is no information on the slope of the substance to be tested, a dose progression factor of 3.2 is used. Using the default progression factor, doses would be selected from the sequence 1.75, 5.5, 17.5, 55, 175, 550, 2000 (or 1.75, 5.5, 17.5, 55, 175, 550, 1750, 5000 for specific regulatory needs). If no estimate of the substance's lethality is available, dosing should be initiated at 175 mg/kg. In most cases, this dose is sublethal and therefore serves to reduce the level of pain and suffering. If animal tolerances to the chemical are expected to be highly variable (i.e., slopes are expected to be less than 2.0), consideration should be given to increasing the dose progression factor beyond the default 0.5 on a log dose scale (i.e., 3.2 progression factor) prior to starting the test. Similarly, for test substances known to have very steep slopes, dose progression factors smaller than the default should be chosen. (Annex 2 includes a table of dose progressions for whole number slopes ranging from 1 to 8 with starting dose 175 mg/kg).

33. Dosing continues depending on the fixed-time interval (e.g., 48-hour) outcomes of all the animals up to that time. The testing stops when one of the following stopping criteria first is met:

(a) 3 consecutive animals survive at the upper bound;

(b) 5 reversals occur in any 6 consecutive animals tested;

(c) at least 4 animals have followed the first reversal and the specified likelihood-ratios exceed the critical value. (See paragraph 44 and Annex 3. Calculations are made at each dosing, following the fourth animal after the first reversal).

For a wide variety of combinations of LD50 and slopes, stopping rule (c) will be satisfied with 4 to 6 animals after the test reversal. In some cases for chemicals with shallow slope dose-response curves, additional animals (up to a total of fifteen tested) may be needed.

34. When the stopping criteria have been attained, the estimated LD50 should be calculated from the animal outcomes at test termination using the method described in paragraphs 40 and 41.

35. Moribund animals killed for humane reasons are considered in the same way as animals that died on test. If an animal unexpectedly dies late in the study and there are other survivors at that dose or above, it is appropriate to stop dosing and observe all animals to see if other animals will also die during a similar observation period. If subsequent survivors also die, *and* it appears that all dose levels exceed the LD50 it would be most appropriate to start the study again beginning at least two steps below the lowest dose with deaths (and increasing the observation period) since the technique is most accurate when the starting dose is below the LD50. If subseqent animals survive at or above the dose of the animal that dies, it is not necessary to change the dose progression since the information from the animal that has now died will be included into the calculations as a death at a lower dose than subsequent survivors, pulling the LD50 down.

## OBSERVATIONS

36. Animals are observed individually at least once during the first 30 minutes after dosing, periodically during the first 24 hours (with special attention given during the first 4 hours), and daily thereafter, for a total of 14 days, except where they need to be removed from the study and humanely killed for animal welfare reasons or are found dead. However, the duration of observation should not be fixed rigidly. It should be determined by the toxic reactions and time of onset and length of recovery period, and may thus be extended when considered necessary. The times at which signs of toxicity appear and disappear are important, especially if there is a tendency for toxic signs to be delayed (17). All observations are systematically recorded with individual records being maintained for each animal.

37. Additional observations will be necessary if the animals continue to display signs of toxicity. Observations should include changes in skin and fur, eyes and mucous membranes, and also respiratory, circulatory, autonomic and central nervous systems, and somatomotor activity and behaviour pattern. Attention should be directed to observations of tremors, convulsions, salivation, diarrhoea, lethargy, sleep and coma. The principles and criteria summarised in the Humane Endpoints Guidance Document (13) should be taken into consideration. Animals found in a moribund condition and animals showing severe pain or enduring signs of severe distress should be humanely killed. When animals are killed for humane reasons or found dead, the time of death should be recorded as precisely as possible.

### Body weight

38. Individual weights of animals should be determined shortly before the test substance is administered and at least weekly thereafter. Weight changes should be calculated and recorded. At the end of the test surviving animals are weighed and then humanely killed.

### Pathology

39. All animals (including those which die during the test or are removed from the study for animal welfare reasons) should be subjected to gross necropsy. All gross pathological changes should be recorded for each animal. Microscopic examination of organs showing evidence of gross pathology in animals surviving 24 or more hours after the initial dosing may also be considered because it may yield useful information.

## DATA AND REPORTING

### Data

40. Individual animal data should be provided. Additionally, all data should be summarised in tabular form, showing for each test dose the number of animals used, the number of animals displaying signs of toxicity (17), the number of animals found dead during the test or killed for humane reasons, time of death of individual animals, a description and the time course of toxic effects and reversibility, and necropsy findings. A rationale for the starting dose and the dose progression and any data used to support this choice should be provided.

**Calculation of LD50 for the main test**

41. The LD50 is calculated using the maximum likelihood method (14)(15), except in the exceptional cases described in paragraph 42. The following statistical details may be helpful in implementing the maximum likelihood calculations suggested (with an assumed *sigma*). All deaths, whether immediate or delayed or humane kills, are incorporated for the purpose of the maximum likelihood analysis. Following Dixon (4), the likelihood function is written as follows:

$L = L_1 L_2 \ldots L_n$ ,

where

$L$ is the likelihood of the experimental outcome, given *mu* and *sigma*, and n the total number of animals tested.

$L_i = 1 - F(Z_i)$ if the $i^{th}$ animal survived, or
$L_i = F(Z_i)$ if the $i^{th}$ animal died,

where

$F$ = cumulative standard normal distribution,
$Z_i = [\log(d_i) - mu\ ] / sigma$
$d_i$ = dose given to the $i^{th}$ animal, and
*sigma* = standard deviation in log units of dose (which is not the log standard deviation).

An estimate of the true LD50 is given by the value of *mu* that maximizes the likelihood L (see paragraph 43).

An estimate of *sigma* of 0.5 is used unless a better generic or case-specific value is available.

42. Under some circumstances, statistical computation will not be possible or will likely give erroneous results. Special means to determine/report an estimated LD50 are available for these circumstances as follows:

(a) If testing stopped based on criterion (a) in paragraph 33 (i.e., a boundary dose was tested repeatedly), or if the upper bound dose ended testing, then the LD50 is reported to be above the upper bound. Classification is completed on this basis.

(b) If all the dead animals have higher doses than all the live animals (or if all live animals have higher doses than all the dead animals, although this is practically unlikely), then the LD50 is between the doses for the live and the dead animals. These observations give no further information on the exact value of the LD50. Still, a maximum likelihood LD50 estimate can be

made provided there is a value for *sigma*. Stopping criterion (b) in paragraph 33 describes one such circumstance.

(c) If the live and dead animals have only one dose in common and all the other dead animals have higher doses and all the other live animals lower doses, or vice versa, then the LD50 equals their common dose. If a closely related substance is tested, testing should proceed with a smaller dose progression.

If none of the above situations occurs, then the LD50 is calculated using the maximum likelihood method.

43. Maximum likelihood calculation can be performed using either SAS (14) (e.g., PROC NLIN) or BMDP (15) (e.g., program AR) computer program packages as described in Appendix 1D in Reference 3. Other computer programs may also be used. Typical instructions for these packages are given in appendices to the ASTM Standard E 1163-87 (6). [The *sigma* used in the BASIC program in (6) will need to be edited to reflect the parameters of this OECD 425 Guideline.] The program's output is an estimate of log(LD50) and its standard error.

44. The likelihood-ratio stopping rule (c) in paragraph 33 is based on three measures of test progress, that are of the form of the likelihood in paragraph 41 with different values for *mu*. Comparisons are made after each animal tested after the sixth that does not already satisfy criterion (a) or (b) of paragraph 33. The equations for the likelihood-ratio criteria are provided in Annex 3. These comparisons are most readily performed in an automated manner and can be executed repeatedly, for instance, by a spreadsheet routine such as that also provided in Annex 3. If the criterion is met, testing stops and the LD50 can be calculated by the maximum likelihood method.

**Computation of confidence interval**

45. Following the main test and estimated LD50 calculation, it may be possible to compute interval estimates for the LD50. Any of these confidence intervals provides valuable information on the reliability and utility of the main test that was conducted. A wide confidence interval indicates that there is more uncertainty associated with the estimated LD50. The reliability of the estimated LD50 is low and the usefulness of the estimated LD50 may be marginal. A narrow interval indicates that there is relatively little uncertainty associated with the estimated LD50. The reliability of the estimated LD50 is high and the usefulness of the estimated LD50 is good. This means that if the main test were to be repeated, the new estimated LD50 should be close to the original estimated LD50 and both of these estimates should be close to the true LD50.

46. Depending on the outcome of the main test, one of two different types of interval estimates of the true LD50 is calculated.

- When at least three different doses have been tested and the middle dose has at least one animal that survived and one animal that died, a profile-likelihood-based computational procedure is used to obtain a confidence interval that is expected to contain the true LD50 95% of the time. However, because small numbers of animals are expected to be used, the actual level of confidence is generally not exact (18). The random stopping rule improves the ability of the test overall to respond to varying underlying conditions, but also causes the reported level of confidence and the actual level of confidence to differ somewhat (19).

- If all animals survive at or below a given dose level and all animals die when dosed at the next higher dose level, an interval is calculated that has as its lower limit the highest dose

tested where all the animals survive and has as its upper limit the dose level where all the animals died. This interval is labeled as "approximate." The exact confidence level associated with this interval cannot be specifically determined. However, because this type of response would only occur when the dose response is steep, in most cases, the true LD50 is expected to be contained within the calculated interval or be very close to it. This interval will be relatively narrow and sufficiently accurate for most practical use.

47. In some instances, confidence intervals are reported as infinite, through including either zero as its lower end or infinity as its upper end, or both. Such intervals, for example, may occur when all animals die or all animals live. Implementing this set of procedures requires specialized computation which is either by use of a dedicated program to be available from the USEPA or OECD or developed following technical details available from the USEPA or OECD (20). Achieved coverage of these intervals and properties of the dedicated program are described in reports (21) also available through the USEPA.

**Test report**

48. The test report must include the following information:

Test substance:

- physical nature, purity and,where relevant, physico-chemical properties (including isomerisation);
- identification data, including CAS number.

Vehicle (if appropriate):

- justification for choice of vehicle, if other than water.

Test animals:

- species/strain used;
- microbiological status of the animals, when known;
- number, age and sex of animals (including, where appropriate, a rationale for use of males instead of females);
- source, housing conditions, diet, etc.;

Test conditions:

- rationale for initial dose level selection, dose progression factor and for follow-up dose levels
- details of test substance formulation including details of the physical form of the material administered.;
- details of the administration of the test substance including dosing volumes and time of dosing;
- details of food and water quality (including diet type/source, water source).

Results:

- body weight/body weight changes;
- tabulation of response data and dose level for each animal (i.e., animals showing signs of toxicity including nature, severity, duration of effects, and mortality);

- individual weights of animals at the day of dosing, in weekly intervals thereafter, and at the time of death or sacrifice ;
- time course of onset of signs of toxicity and whether these were reversible for each animal;
- necropsy findings and any histopathological findings for each animal, if available;
- LD50 data;
- statistical treatment of results (description of computer routine used and spreadsheet tabulation of calculations).

Discussion and interpretation of results.

Conclusions.

**LITERATURE**

(1) Dixon W.J. and A.M. Mood. (1948). A Method for Obtaining and Analyzing Sensitivity Data. J. Amer. Statist. Assoc., 43, 109-126.

(2) Dixon W.J. The Up-and-Down Method for Small Samples (1965). J. Amer. Statist. Assoc. 60, 967-978.

(3) Dixon W.J. (1991). Staircase Bioassay: The Up-and-Down Method. Neurosci. Biobehav. Rev., 15, 47-50.

(4) Dixon W.J. (1991) Design and Analysis of Quantal Dose-Response Experiments (with Emphasis on Staircase Designs). Dixon Statistical Associates, Los Angeles CA, USA.

(5) Bruce R.D. (1985). An Up-and-Down Procedure for Acute Toxicity Testing. Fundam. Appl. Tox., 5, 151-157.

(6) ASTM (1987). E 1163-87, Standard Test Method for Estimating Acute Oral Toxicity in Rats. American Society for Testing and Materials, Philadelphia Pa, USA.

(7) Lipnick R.L., J.A. Cotruvo, R.N. Hill, R.D. Bruce, K.A. Stitzel, A.P. Walker, I. Chu, M. Goddard, L. Segal, J.A. Springer, and R.C. Myers. (1995). Comparison of the Up-and-Down, Conventional $LD_{50}$ and Fixed Dose Acute Toxicity Procedures. Fd. Chem. Toxicol., 33, 223-231.

(8) Choi, S.C. (1990). Interval estimation of the $LD_{50}$ based on an up-and-down experiment. Biometrics 46, 485-492.

(9) Vågerö, M. and R. Sundberg. (1999). The distribution of the maximum likelihood estimator in up-and-down experiments for quantal dose-response data. J. Biopharmaceut. Statist. 9(3), 499-519.

(10) Hsi, B.P. (1969). The multiple sample up-and-down method in bioassay. J. Amer. Statist. Assoc. 64, 147-162.

(11) Noordwijk, A.J. van and J. van Noordwijk. (1988). An accurate method for estimating an approximate lethal dose with few animals, tested with a Monte Carlo procedure. Arch. Toxicol. 61, 333-343.

(12) OECD (2000) Guidance Document on Acute Oral Toxicity . Environmental Health and Safety Monograph Series on Testing and Assessment No 24.

(13) OECD (2000) Guidance Document on the Recognition, Assessment and Use of Clinical Signs as Humane Endpoints for Experimental Animals Used in Safety Evaluation. Environmental Health and Safety Monograph Series on Testing and Assessment No 19.

(14) SAS Institute Inc. (1990). SAS/STAT® User's Guide. Version 6, Fourth Ed. or later. Cary, NC, USA.

(15) BMDP Statistics Software, Inc. (1990). BMDP Statistical Software Manual. W.J. Dixon, Chief Ed. 1990 rev. or later. University of California Press, Berkeley, CA, USA.

(16) OECD(1998) Harmonized Integrated Hazard Classification System for Human Health and Environmentla Effects of Chemical Substances as endorsed by the 28th Joint Meeting of the Chemicals Committee and Working Party on Chemicals in November 1998, Part 2, pg 11. [http://webnet1.oecd.org/oecd/pages/home/displaygeneral/0,3380,EN-documents-521-14-no-24-no-0,FF.html].

(17) Chan P.K. and A.W. Hayes. (1994 ). Chap. 16. Acute Toxicity and Eye Irritancy. *Principles and Methods of Toxicology*. Third Edition. A.W. Hayes, Editor. Raven Press, Ltd., New York, USA.

(18) Rosenberger, W.F., Flournoy, N. and Durham, S.D. (1997). Asymptotic normality of maximum likelihood estimators from multiparameter response-driven designs. Journal of Statistical Planning and Inference 60, 69-76.

(19) Jennison, C. and B.W. Turnbull. 2000. Group Sequential Methods with Application to Clinical Trials. Chapman & Hall/CRC: Boca Raton, FL. USA.

(20) Acute Oral Toxicity (OECD Test Guideline 425) Statistical Programme (AOT 425 StatPgm). Version: 1.0, 2001. [http://www.oecd.org/oecd/pages/home/displaygeneral/0,3380,EN-document-524-nodirectorate-no-24-6775-8,FF.html]

(21) Westat. 2001. Simulation Results from the AOT425StatPgm Program. Report prepared for U.S. E.P.A. under Contract 68-W7-0025, Task Order 5-03.

**OECD/OCDE** **425**

Adopted:
17th December 2001

**ANNEX 1**

**DEFINITIONS**

Acute oral toxicity refers to those adverse effects occurring following oral administration of a single dose of a substance, or multiple doses given within 24 hours.

Delayed death means that an animal does not die or appear moribund within 48 hours but dies later during the 14-day observation period.

Dose is the amount of test substance administered. Dose is expressed as weight (g, mg) or as weight of test substance per unit weight of test animal (e.g. mg/kg).

Dose progression factor, sometimes termed a dose spacing factor, refers to the multiple by which a dose is increased (i.e., the dose progression) when an animal survives or the divisor by which it is decreased when an animal dies. The dose progression factor is recommended to be the antilog of 1/ (the estimated slope of the dose response curve). The default dose progression factor is recommended to be 3.2 = antilog 0.5 = antilog ½.

GHS: Globally Harmonised Classification System for Chemical Substances and Mixtures. A joint activity of OECD (human health and the environment), UN Committee of Experts on Transport of Dangerous Goods (physical–chemical properties) and ILO (hazard communication) and co-ordinated by the Interorganisation Programme for the Sound Management of Chemicals (IOMC).

Impending death: when moribund state or death is expected prior to the next planned time of observation. Signs indicative of this state in rodents could include convulsions, lateral position, recumbence, and tremor. (See the Humane Endpoint Guidance Document (13) for more details).

LD50 (median lethal oral dose), is a statistically derived single dose of a substance that can be expected to cause death in 50 per cent of animals when administered by the oral route. The LD50 value is expressed in terms of weight of test substance per unit weight of test animal (mg/kg).

Limit dose refers to a dose at an upper limitation on testing (2000 or 5000 mg/kg).

Moribund status : being in a state of dying or inability to survive, even if treated. (See the Humane Endpoint Guidance Document (13) for more details).

Nominal sample size refers to the total number of tested animals, reduced by one less than the number of like responses at the beginning of the series, or by the number of tested animals up to but not including the pair that creates the first reversal. For example, for a series where X and O indicate opposite animal outcomes (for instance, X could be: "dies within 48 hours" and O: " survives") in a pattern as follows: OOOXXOXO, we have the total number of tested animals (or sample size in the conventional sense) as 8 and the nominal sample size as 6. This particular example shows 4 animals following a reversal. It is important to note whether a count in a particular part of the guideline refers to the nominal sample size or to the total number tested. For example, the maximum actual number tested is 15. When testing is stopped based on that maximum number, the nominal sample size will be less than or equal to 15. Members of the nominal sample start with the (r-1)st animal (the animal before the second in the reversal pair) (see reversal below).

Predictable death: presence of clinical signs indicative of death at a known time in the future before the planned end of the experiment, for example: inability to reach water or food. ( See the Humane Endpoint Guidance Document (13) for more details).

Probit is an abbreviation for the term "probability integral transformation" and a probit dose-response model permits a standard normal distribution of expected responses (i.e., one centered to its mean and scaled to its standard deviation, *sigma*) to doses (typically in a logarithmic scale) to be analyzed as if it were a straight line with slope the reciprocal of *sigma*. A standard normal lethality distribution is symmetric; hence, its mean is also its true LD50 or median response.

Reversal is a situation where nonresponse is observed at some dose, and a response is observed at the next dose tested, or vice versa (i.e., response followed by nonresponse). Thus, a reversal is created by a pair of responses. The first such pair occurs at animals numbered r-1 and r.

*Sigma* is the standard deviation of a log normal curve describing the range of tolerances of test subjects to the chemical (where a subject is expected capable of responding if the chemical dose exceeds the subject's tolerance). The estimated *sigma* provides an estimate of the variation among test animals in response to a full range of doses.
See slope and probit.

Slope (of the dose-response curve) is a value related to the angle at which the dose response curve rises from the dose axis. In the case of probit analysis, when responses are analyzed on a probit scale against dose on a log scale this curve will be a straight line and the slope is the reciprocal of *sigma,* the standard deviation of the underlying test subject tolerances, which are assumed to be normally distributed. See probit and *sigma.*

Stopping rule is used in this guideline synonymously with 1) a specific stopping criterion and 2) the collection of all criteria determining when a testing sequence terminates. In particular, for the main test, stopping rule is used in paragraph 7 as a shorthand for the criterion that relies on comparison of ratios to a critical value.

**ANNEX 2**

**DOSING PROCEDURE**

**Dose Sequence for Main Test**

1. Up-and-Down Dosing Procedure. For each run, animals are dosed, one at a time, usually at 48-hour intervals. The first animal receives a dose a step below the level of the best estimate of the LD50. This selection reflects an adjustment for a tendency to bias **away from the LD50 in the direction of** the initial starting dose in the final estimate (see paragraph 7 of the Guideline). The overall pattern of outcomes is expected to stabilize as dosing is adjusted for each subsequent animal. Paragraph 3 below provides further guidance for choice of dose spacing factor.

2. Default Dose Progression. Once the starting dose and dose spacing are decided, the toxicologist should list all possible doses including the upper bound (usually 2000 or 5000 mg/kg). Doses that are close to the upper bound should be removed from the progression. The stepped nature of the TG 425 design provides for the first few doses to function as a self-adjusting sequence. Because of the tendency for positive bias, in the event that nothing is known about the substance, a starting dose of 175 mg/kg is recommended. If the default procedure is to be used for the main test, dosing will be initiated at 175 mg/kg and doses will be spaced by a factor of 0.5 on a log dose scale. The doses to be used include 1.75, 5.5, 17.5, 55, 175, 550, 2000 or, for specific regulatory needs, 1.75, 5.5, 17.5, 55, 175, 550, 1750, 5000. For certain highly toxic substances, the dosing sequence may need to be extended to lower values.

3. In the event a dose progression factor other than the default is deemed suitable, Table 1 provides dose progressions for whole number multiples of slope, from 1 to 8.

**425** **OECD/OCDE**

Table 1 Dose Progressions for OECD Guideline 425
Choose a Slope and Read Down the Column
All doses in mg/kg bw

| Slope = 1 | 2 | 3 | 4 | 5 | 6 | 7 | 8 |
|---|---|---|---|---|---|---|---|
| 0.175* | 0.175* | 0.175* | 0.175* | 0.175* | 0.175* | 0.175* | 0.175* |
| | | | | | | 0.24 | 0.23 |
| | | | | 0.275 | 0.26 | | |
| | | | 0.31 | | | 0.34 | 0.31 |
| | | 0.375 | | | 0.375 | | |
| | | | | | | | 0.41 |
| | | | | 0.44 | | 0.47 | |
| | 0.55 | | 0.55 | | 0.55 | | 0.55 |
| | | | | 0.69 | | 0.65 | |
| | | | | | | | 0.73 |
| | | 0.81 | | | 0.82 | | |
| | | | 0.99 | | | 0.91 | 0.97 |
| | | | | 1.09 | 1.2 | | |
| | | | | | | 1.26 | 1.29 |
| 1.75 | 1.75 | 1.75 | 1.75 | 1.75 | 1.75 | 1.75 | 1.75 |
| | | | | | | 2.4 | 2.3 |
| | | | | 2.75 | 2.6 | | |
| | | | 3.1 | | | 3.4 | 3.1 |
| | | 3.75 | | | 3.75 | | |
| | | | | 4.4 | | | 4.1 |
| | | | | | | 4.7 | |
| | 5.5 | | 5.5 | | 5.5 | | 5.5 |
| | | | | 6.9 | | 6.5 | |
| | | | | | | | 7.3 |
| | | 8.1 | | | 8.2 | | |
| | | | 9.9 | | | 9.1 | 9.7 |
| | | | | 10.9 | 12 | | |
| | | | | | | 12.6 | 12.9 |
| 17.5 | 17.5 | 17.5 | 17.5 | 17.5 | 17.5 | 17.5 | 17.5 |
| | | | | | | 24 | 23 |
| | | | | 27.5 | 26 | | |
| | | | 31 | | | 34 | 31 |

Table 1 continued

| | | | | | | | |
|---|---|---|---|---|---|---|---|
| | | 37.5 | | | 37.5 | | |
| | | | | 44 | | | 41 |
| | | | | | | 47 | |
| | 55 | | 55 | | 55 | | 55 |
| | | | | | | 65 | |
| | | | | 69 | | | 73 |
| | | 81 | | | 82 | | |
| | | | 99 | | | 91 | 97 |
| | | | | 109 | 120 | | |
| | | | | | | 126 | 129 |
| 175 | 175 | 175 | 175 | 175 | 175 | 175 | 175 |
| | | | | | | 240 | 230 |
| | | | | 275 | 260 | | |
| | | | 310 | | | 340 | 310 |
| | | 375 | | | 375 | | |
| | | | | 440 | | | 410 |
| | | | | | | 470 | |
| | 550 | | 550 | | 550 | | 550 |
| | | | | | | 650 | |
| | | | | 690 | | | 730 |
| | | 810 | | | 820 | | |
| | | | 990 | | | 910 | 970 |
| | | | | 1090 | 1200 | | |
| | | | | | | 1260 | 1290 |
| 1750 | 1750 | 1750 | 1750 | 1750 | 1750 | 1750 | 1750 |
| | | | | | | 2400 | 2300 |
| | | | | 2750 | 2600 | | |
| | | | 3100 | | | | 3100 |
| | | | | | 3750 | 3400 | |
| | | | | | | | 4100 |
| 5000 | 5000 | 5000 | 5000 | 5000 | 5000 | 5000 | 5000 |

* If lower doses are needed, continue progressions to a lower dose

## ANNEX 3

## COMPUTATIONS FOR THE LIKELIHOOD-RATIO STOPPING RULE

1. As described in Guideline paragraph 33, the main test may be completed on the basis of the first of three stopping criteria to occur. In any case, even if none of the stopping criteria is satisfied, dosing would stop when 15 animals are dosed. Tables 2-5 illustrate examples where testing has started with no information, so the recommended default starting value, 175 mg/kg, and the recommended default dose progression factor, 3.2 or one half log, have been used. Please note the formatting of these tables is only illustrative.

2. Table 2 shows how the main test would stop if 3 animals have survived at the limit dose of 2000 mg/kg; Table 3 shows a similar situation when the limit dose of 5000 mg/kg is used. (These illustrate situations where a Limit Test was not thought appropriate *a priori*.) Table 4 shows how a particular sequence of 5 reversals in 6 tested animals could occur and allow test completion. Finally, Table 5 illustrates a situation where neither criterion (a) nor criterion (b) has been met, a reversal of response has occurred followed by 4 tested animals, and, consequently, criterion (c) must be evaluated as well.

3. Criterion (c) calls for a likelihood-ratio stopping rule to be evaluated after testing each animal, starting with the fourth tested following the reversal. Three "measures of test progress" are calculated. Technically, these measures of progress are likelihoods, as recommended for the maximum-likelihood estimation of the LD50. The procedure is closely related to calculation of a confidence interval by a likelihood-based procedure.

4. The basis of the procedure is that when enough data have been collected, a point estimate of the LD50 should be more strongly supported than values above and below the point estimate, where statistical support is quantified using likelihood. Therefore three likelihood values are calculated: a likelihood at an LD50 point estimate (called the rough estimate or dose-averaging estimate in the example), a likelihood at a value below the point estimate, and a likelihood at a value above the point estimate. Specifically, the low value is taken to be the point estimate divided by 2.5 and the high value is taken to be the point estimate multiplied by 2.5.

5. The likelihood values are compared by calculating ratios of likelihoods, and then determining whether these likelihood-ratios (LR) exceed a critical value. Testing stops when the ratio of the likelihood for the point estimate exceeds each of the other likelihoods by a factor of 2.5, which is taken to indicate relatively strong statistical support for the point estimate. Therefore two likelihood-ratios (LRs) are calculated, a ratio of likelihoods for the point estimate and the point estimate divided by 2.5, and a ratio for the point estimate and the estimate times 2.5.

6. The calculations are easily performed in any spreadsheet with normal probability functions. The calculations are illustrated in Table 5, which is structured to promote spreadsheet implementation. The computation steps are illustrated using an example where the upper limit dose is 5000 mg/kg, but the computational steps are carried out in the same fashion when the upper boundary dose is 2000 mg/kg. Empty spreadsheets preprogrammed with the necessary formulas are available for direct downloading on the OECD and EPA web sites.

Hypothetical example using an upper limit dose of 5000 mg/kg (Table 5)

7. In the hypothetical example utilizing an upper boundary dose of 5000 mg/kg, the LR stopping criterion was met after nine animals had been tested. The first "reversal" occurred with the 3rd animal tested. The LR stopping criterion is checked when four animals have been tested following the reversal. In this example, the fourth animal tested following the reversal is the seventh animal actually tested. Therefore, for this example, the spreadsheet calculations are only needed after the seventh animal had been tested and the data could be entered at that time. Subsequently, the LR stopping criterion would have been checked after testing the seventh animal, the eighth animal, and the ninth. The LR stopping criterion is first satisfied after the ninth animal is tested in this example.

A. Enter the dose-response information animal by animal.

Column 1. Steps are numbered 1-15. No more than 15 animals may be tested.
Column 2. Place an I in this column as each animal is tested.
Column 3. Enter the dose received by the $i^{th}$ animal.
Column 4. Indicate whether the animal responded (shown by an X) or did not respond (shown by an O).

B. The nominal and actual sample sizes.

8. The nominal sample consists of the two animals that represent the first reversal (here the second and third animals), plus all animals tested subsequently. Here, Column 5 indicates whether or not a given animal is included in the nominal sample.

The nominal sample size (nominal $n$) appears in Row 16. This is the number of animals in the nominal sample. In the example, nominal $n$ is 8.
The actual number tested appears in Row 17.

C. Rough estimate of the LD50.

9. The geometric mean of doses for the animals in the current nominal sample is used as a rough estimate of the LD50 from which to gauge progress. In the table, this is called the "dose-averaging estimator." It is updated with each animal tested. This average is restricted to the nominal sample in order to allow for a poor choice of initial test dose, which could generate either an initial string of responses or an initial string of nonresponses. (However, the results for all animals are used in the likelihood calculations for final LD50 calculation below.) Recall that the geometric mean of $n$ numbers is the product of the $n$ numbers, raised to a power of $1/n$.

The dose-averaging estimate appears in Row 18 (e.g., $(175 * 550 * \ldots * 1750)^{1/8} = 1292.78$).
Row 19 shows the logarithm (base 10) of the value in Row 18 (e.g., $\log_{10} 1292.8 = 3.112$).

D. Likelihood for the rough LD50 estimate.

10. Likelihood is a statistical measure of how strongly the data support an estimate of the LD50 or other parameter. Ratios of likelihood values can be used to compare how well the data support different estimates of the LD50.

11. In column 8 calculate the likelihood for Step C's rough LD50 estimate. The likelihood (Row 21) is the product of likelihood contributions for individual animals (see Guideline paragraph 41). The likelihood contribution for the $i^{th}$ animal is denoted $L_i$.

12. In column 7 enter the estimate of the probability of response at dose $d_i$, denoted $P_i$. $P_i$ is calculated from a dose-response curve. Note that the parameters of a probit dose-response curve are the

slope and the LD50, so values are needed for each of those parameters. For the LD50 the dose-averaging estimate from Row 18 is used. For the slope in this example the default value of 2 is used. The following steps may be used to calculate the response probability $P_i$.

1. Calculate the base-10 log of dose $d_i$ (Column 6).

2. For each animal calculate the z-score, denoted $Z_i$ (not shown in the table), using the formulae
   $sigma = 1 / slope$,
   $Z_i = ( \log_{10}( d_i ) - \log_{10}( LD50 ) ) / sigma$

   For example, for the first animal (Row 1),
   $sigma = 1 / 2$
   $Z_1 = ( 2.243 - 3.112 ) / 0.500 = -1.738$

3. For the $i^{th}$ dose the estimated response probability is

   $P_i = F( Z_i )$

where $F$ denotes the cumulative distribution function for the standard normal distribution (i.e., the normal distribution with mean 0 and variance 1).

For example (Row 1),

$P_1 = F( -1.738 ) = 0.0412$

The function $F$ (or something very close) is ordinarily what is given for the normal distribution in statistical tables, but the function is also widely available as a spreadsheet function. It is available under different names, for example the @NORMAL function of Lotus 1-2-3 (1) and the @NORMDIST function in Excel (2). To confirm that you have used correctly the function available in your software, you may wish to verify familiar values such as $F(1.96) \approx 0.975$ or $F(1.64) \approx 0.95$.

13. Column 8. Calculate the natural log of the likelihood contribution ($\ln( L_i )$). $L_i$ is simply the probability of the response that actually was observed for the $i^{th}$ animal:

responding animals: $\ln( L_i ) = \ln ( P_i )$
non-responding animals: $\ln( L_i ) = \ln( 1 - P_i )$

Note that here the natural logarithm (ln) is used, whereas elsewhere the base-10 (common) logarithm was used. These choices are what are ordinarily expected in a given context.

The steps above are performed for each animal. Finally:

Row 20: Sum the log-likelihood contributions in Column 8.
Row 21: Calculate the likelihood by applying the exp function applied to the log-likelihood value in Row 20 (e.g., $\exp(-3.389) = e^{-3.389} = 0.0337$).

E. Calculate likelihoods for two dose values above and below the rough estimate.

14. If the data permit a precise estimate, then one expects the likelihood should be high if the estimate is a reasonable estimate of the LD50, relative to likelihoods for values distant from this estimate. Compare the likelihood for the dose-averaging estimate (1292.8, Row 18) to values differing by a factor of

2.5 from that value (i.e., to 1292.8*2.5 and 1292.8/2.5). The calculations (displayed in Columns 9-12) are carried out in a fashion similar to those described above, except that the values 517.1 (=1292.8/2.5) and 3232.0 (=1292.8*2.5) have been used for the LD50, instead of 1292.8. The likelihoods and log-likelihoods are displayed in Rows 20-21.

F. Calculate likelihood-ratios.

15. The three likelihood values (Row 21) are used to calculate two likelihood-ratios (Row 22). A likelihood-ratio is used to compare the statistical support for the estimate of 1292.8 to the support for each of the other values, 517.1 and 3232.0. The two likelihood-ratios are therefore:

LR1 = [likelihood of 1292.8] / [likelihood of 517.1]
= 0.0337 / 0.0080
= 4.21

and

LR2 = [likelihood of 1292.8] / [likelihood of 3232.0]
= 0.0337 / 0.0098
= 3.44

G. Determine if the likelihood-ratios exceed the critical value.

16. High likelihood-ratios are taken to indicate relatively high support for the point estimate of the LD50. Both of the likelihood-ratios calculated in Step F (4.21 and 3.44) exceed the critical likelihood-ratio, which is 2.5. Therefore the LR stopping criterion is satisfied and testing stops. This is indicated by a TRUE in Row 24 and a note at the top of the example spreadsheet that the LR criterion is met.

## LITERATURE

(1) Lotus Development Corporation (1999). Lotus® 1-2-3. Version 9.5, Millenium Edition. Cambridge, MA, USA.

(2) Microsoft Corporation (1985-1997). Microsoft® Excel Version 5.0 or later. Seattle, WA, USA.

Table 2. Example of stopping criterion (a) using 2000 mg/kg.

Stop after animal #5 because 3 animals survive at limit of 2000 mg/kg (#3-#5).

| 1 | 2 | 3 | 4 | 5 | 6 | 7 | 8 | 9 | 10 | 11 | 12 |
|---|---|---|---|---|---|---|---|---|---|---|---|
| Step | (I)nclude; (E)xclude | Dose | (X)response (O)non-resp. OK | Included in nominal *n* | log10 Dose | LD50 = Prob. of response | #DIV/0! likelihood contribn. (ln *Li*) | LD50 = Prob. of response | #DIV/0! likelihood contribn. (ln *Li*) | LD50 = Prob. of response | #DIV/0! likelihood contribn. (ln *Li*) |
| 1 | I | 175 | O | no | 2.2430 | #DIV/0! | #DIV/0! | #DIV/0! | #DIV/0! | #DIV/0! | #DIV/0! |
| 2 | I | 550 | O | no | 2.7404 | #DIV/0! | #DIV/0! | #DIV/0! | #DIV/0! | #DIV/0! | #DIV/0! |
| 3 | I | 2000 | O | no | 3.3010 | #DIV/0! | #DIV/0! | #DIV/0! | #DIV/0! | #DIV/0! | #DIV/0! |
| 4 | I | 2000 | O | no | 3.3010 | #DIV/0! | #DIV/0! | #DIV/0! | #DIV/0! | #DIV/0! | #DIV/0! |
| 5 | I | 2000 | O | no | 3.3010 | #DIV/0! | #DIV/0! | #DIV/0! | #DIV/0! | #DIV/0! | #DIV/0! |
| 6 | E | | | | - | | | | | | |
| 7 | E | | | | - | | | | | | |
| 8 | E | | | | - | - | - | - | - | - | - |
| 9 | E | | | | - | - | - | - | - | - | - |
| 10 | E | | | | - | - | - | - | - | - | - |
| 11 | E | | | | - | - | - | - | - | - | - |
| 12 | E | | | | - | - | - | - | - | - | - |
| 13 | E | | | | | | | - | - | - | - |
| 14 | E | | | | | | | - | - | - | - |
| 15 | E | | | | | | | - | - | - | - |
| Nominal Sample size = | | | | 0 | | | | | | | |
| Actual number tested = | | | | 5 | | | | | | | |

Ignore all calculation cells. No reversal in direction of response.

Maximum Likelihood Calculations cannot be completed. LD50 is greater than 2000 mg/kg.

Calculated maximum likelihood estimate of LD50 = none

Table 3. Example of stopping criterion (a) using 5000 mg/kg.

Stop after animal #6 because 3 animals survive at limit of 5000 mg/kg (#4-#6).

| 1 | 2 | 3 | 4 | 5 | 6 | 7 | 8 | 9 | 10 | 11 | 12 |
|---|---|---|---|---|---|---|---|---|---|---|---|
| Step | (I)nclude; (E)xclude | Dose | (X)response (O)non-resp. OK | Included in nominal *n* | log10 Dose | LD50 = Prob. of response | #DIV/0! likelihood contribn. (ln *Li*) | LD50 = Prob. of response | #DIV/0! likelihood contribn. (ln *Li*) | LD50 = Prob. of response | #DIV/0! likelihood contribn. (ln *Li*) |
| 1 | I | 175 | O | no | 2.2430 | #DIV/0! | #DIV/0! | #DIV/0! | #DIV/0! | #DIV/0! | #DIV/0! |
| 2 | I | 550 | O | no | 2.7404 | #DIV/0! | #DIV/0! | #DIV/0! | #DIV/0! | #DIV/0! | #DIV/0! |
| 3 | I | 1750 | O | no | 3.2430 | #DIV/0! | #DIV/0! | #DIV/0! | #DIV/0! | #DIV/0! | #DIV/0! |
| 4 | I | 5000 | O | no | 3.6990 | #DIV/0! | #DIV/0! | #DIV/0! | #DIV/0! | #DIV/0! | #DIV/0! |
| 5 | I | 5000 | O | no | 3.6990 | #DIV/0! | #DIV/0! | #DIV/0! | #DIV/0! | #DIV/0! | #DIV/0! |
| 6 | I | 5000 | O | no | 3.6990 | #DIV/0! | #DIV/0! | #DIV/0! | #DIV/0! | #DIV/0! | #DIV/0! |
| 7 | E | | | | - | | | | | | |
| 8 | E | | | | - | | | | | | |
| 9 | E | | | | - | - | - | - | - | - | - |
| 10 | E | | | | - | - | - | - | - | - | - |
| 11 | E | | | | - | - | - | - | - | - | - |
| 12 | E | | | | - | | | | - | - | - |
| 13 | E | | | | - | | | | - | - | - |
| 14 | E | | | | - | | | | - | - | - |
| 15 | E | | | | - | | | | - | - | - |
| Nominal Sample size = | | | | 0 | | | | | | | |
| Actual number tested = | | | | 6 | | | | | | | |
| Calculated maximum likelihood estimate of LD50 = | | | | | none | | | | | | |

Ignore all calculation cells. No reversal in direction of response.

Maximum Likelihood Calculations cannot be completed. LD50 is greater than 5000 mg/kg.

Table 4. Example of stopping criterion (b)

Stop after animal #7 because 5 reversals in 6 consecutive animals tested (#2-#7).

| 1 | 2 | 3 | 4 | 5 | 6 | 7 | 8 | 9 | 10 | 11 | 12 |
|---|---|---|---|---|---|---|---|---|---|---|---|
| Step | (I)nclude; (E)xclude | Dose | (X)response (O)non-resp. OK | Included in nominal *n* | log10 Dose | LD50 = Prob. of response | 31.0 likelihood contribn. (ln *Li*) | LD50 = Prob. of response | 12.4 likelihood contribn. (ln *Li*) | LD50 = Prob. of response | 77.6 likelihood contribn. (ln *Li*) |
| 1 | I | 175 | X | no | 2.2430 | 0.9335 | -0.0688 | 0.9892 | -0.0108 | 0.7602 | -0.2742 |
| 2 | I | 55 | X | yes | 1.7404 | 0.6905 | -0.3703 | 0.9020 | -0.1031 | 0.3826 | -0.9607 |
| 3 | I | 17.5 | O | yes | 1.2430 | 0.3095 | -0.3703 | 0.6174 | -0.9607 | 0.0980 | -0.1031 |
| 4 | I | 55 | X | yes | 1.7404 | 0.6905 | -0.3703 | 0.9020 | -0.1031 | 0.3826 | -0.9607 |
| 5 | I | 17.5 | O | yes | 1.2430 | 0.3095 | -0.3703 | 0.6174 | -0.9607 | 0.0980 | -0.1031 |
| 6 | I | 55 | X | yes | 1.7404 | 0.6905 | -0.3703 | 0.9020 | -0.1031 | 0.3826 | -0.9607 |
| 7 | I | 17.5 | O | yes | 1.2430 | 0.3095 | -0.3703 | 0.6174 | -0.9607 | 0.0980 | -0.1031 |
| 8 | E | | | | - | - | - | - | - | - | - |
| 9 | E | | | | - | - | - | - | - | - | - |
| 10 | E | | | | - | - | - | - | - | - | - |
| 11 | E | | | | - | - | - | - | - | - | - |
| 12 | E | | | | - | - | - | - | - | - | - |
| 13 | E | | | | - | - | - | - | - | - | - |
| 14 | E | | | | - | - | - | - | - | - | - |
| 15 | E | | | | - | - | - | - | - | - | - |
| Nominal Sample size = | | | | 6 | | | | | | | |
| Actual number tested = | | | | 7 | | | | | | | |
| Dose-averaging estimator | | | | 31.02 | | | | | | | |
| log10 = | | | | 1.492 | | | | | | | |
| log-likelihood sums: | | | | | | | -2.2906 | | -3.2021 | | -3.4655 |
| likelihoods: | | | | | | | 0.1012 | | 0.0407 | | 0.0313 |
| likelihood ratios: | | | | | | | | | 2.4880 | | 3.2378 |
| Individual ratios exceed critical value? | | | | critical= | 2.5 | | Automated calculation; not relevant to this case. | | FALSE | | TRUE |
| Both ratios exceed critical value? | | | | | | | | | FALSE | | |
| Calculated maximum likelihood estimate of LD50 = | | | | | 29.6 | Final estimate obtained from Maximum Likelihood Calculations | | | | | |

Table 5. Example of stopping criterion (c)

Stop when LR criterion is first met, here at animal #9.
Check LR criterion starting at animal #6.

| Assumed slope | 2 | sigma = | 0.5 |
|---|---|---|---|

| Parameters of convergence criterion | |
|---|---|
| critical LR | 2.5 |
| factor of LD50 | 2.5 |

Result: The LR criterion is met

| 1 | 2 | 3 | 4 | 5 | 6 | | 7 | 8 | 9 | 10 | 11 | 12 |
|---|---|---|---|---|---|---|---|---|---|---|---|---|
| Step | (I)nclude; (E)xclude | Dose | (X)response (O)non-resp. OK | Included in nominal *n* | log10 Dose | Contrib.to DAE | LD50 = Prob. of response | 1292.8 likelihood contribn. (ln *Li*) | LD50 = Prob. of response | 517.1 likelihood contribn. (ln *Li*) | LD50 = Prob. of response | 3232.0 likelihood contribn. (ln *Li*) |
| 1 | I | 175 | O | no | 2.2430 | 0.0000 | 0.0412 | -0.0421 | 0.1733 | -0.1903 | 0.0057 | -0.0057 |
| 2 | I | 550 | O | yes | 2.7404 | 2.7404 | 0.2289 | -0.2600 | 0.5214 | -0.7368 | 0.0620 | -0.0640 |
| 3 | I | 1750 | X | yes | 3.2430 | 3.2430 | 0.6037 | -0.5046 | 0.8552 | -0.1564 | 0.2971 | -1.2138 |
| 4 | I | 550 | O | yes | 2.7404 | 2.7404 | 0.2289 | -0.2600 | 0.5214 | -0.7368 | 0.0620 | -0.0640 |
| 5 | I | 1750 | X | yes | 3.2430 | 3.2430 | 0.6037 | -0.5046 | 0.8552 | -0.1564 | 0.2971 | -1.2138 |
| 6 | I | 550 | O | yes | 2.7404 | 2.7404 | 0.2289 | -0.2600 | 0.5214 | -0.7368 | 0.0620 | -0.0640 |
| 7 | I | 1750 | O | yes | 3.2430 | 3.2430 | 0.6037 | -0.9257 | 0.8552 | -1.9323 | 0.2971 | -0.3525 |
| 8 | I | 5000 | X | yes | 3.6990 | 3.6990 | 0.8800 | -0.1279 | 0.9756 | -0.0247 | 0.6477 | -0.4344 |
| 9 | I | 1750 | X | yes | 3.2430 | 3.2430 | 0.6037 | -0.5046 | 0.8552 | -0.1564 | 0.2971 | -1.2138 |
| 10 | E | | | | - | 0.0000 | - | - | - | - | - | - |
| 11 | E | | | | - | 0.0000 | - | - | - | - | - | - |
| 12 | E | | | | - | 0.0000 | - | - | - | - | - | - |
| 13 | E | | | | - | 0.0000 | - | - | - | - | - | - |
| 14 | E | | | | - | 0.0000 | - | - | - | - | - | - |
| 15 | E | | | | - | 0.0000 | - | - | - | - | - | - |
| Nominal Sample size = | | | | 8 | | | | | | | | |
| Actual number tested = | | | | 9 | | | | | | | | |
| Dose-averaging estimator | | | | 1292.78 | | | | | | | | |
| log10 = | | | | 3.112 | | | | | | | | |
| log-likelihood sums: | | | | | | | | -3.3894 | | -4.8270 | | -4.6260 |
| likelihoods: | | | | | | | | 0.0337 | | 0.0080 | | 0.0098 |
| likelihood ratios: | | | | | | | | | | 4.2104 | | 3.4436 |
| Individual ratios exceed critical value? | | | | critical= | | 2.5 | | | | TRUE | | TRUE |
| Both ratios exceed critical value? | | | | | | | | | | TRUE | | |

**425** **OECD/OCDE**

## ANNEX 4

## CRITERIA FOR CLASSIFICATION OF TEST SUBSTANCES WITH EXPECTED LD50 VALUES EXCEEDING 2000 MG/KG WITHOUT THE NEED FOR TESTING

1. Criteria for hazard Category 5 are intended to enable the identification of test substances which are of relatively low acute toxicity hazard but which, under certain circumstances may present a danger to vulnerable populations. These substances are anticipated to have an oral or dermal LD50 in the range of 2000-5000 mg/kg or equivalent doses for other routes. Test substances could be classified in the hazard category defined by: 2000 mg/kg<LD50<5000 mg/kg (Category 5 in the GHS) in the following cases:

a) if reliable evidence is already available that indicates the LD50 to be in the range of Category 5 values; or other animal studies or toxic effects in humans indicate a concern for human health of an acute nature.

b) through extrapolation, estimation or measurement of data if assignment to a more hazardous category is not warranted, and
   - reliable information is available indicating significant toxic effects in humans, or
   - any mortality is observed when tested up to Category 4 values by the oral route, or
   - where expert judgement confirms significant clinical signs of toxicity, when tested up to Category 4 values, except for diarrhoea, piloerection or an ungroomed appearance, or
   - where expert judgement confirms reliable information indicating the potential for significant acute effect from the other animal studies.

### TESTING AT DOSES ABOVE 2000 MG/KG

2. Recognising the need to protect animal welfare, testing in animals in Category 5 ranges is discouraged and should only be considered when there is a strong likelihood that results of such a test would have a direct relevance for protecting human health.

# Appendix M2

## EPA UDP Test Guideline

***[This Page Intentionally Left Blank]***

United States
Environmental Protection
Agency

Prevention, Pesticides
and Toxic Substances
(7101)

EPA 712–C–02–190
December 2002

EPA

# Health Effects Test Guidelines OPPTS 870.1100 Acute Oral Toxicity

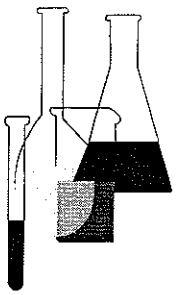

## INTRODUCTION

This guideline is one of a series of test guidelines that have been developed by the Office of Prevention, Pesticides and Toxic Substances, United States Environmental Protection Agency for use in the testing of pesticides and toxic substances, and the development of test data that must be submitted to the Agency for review under Federal regulations.

The Office of Prevention, Pesticides and Toxic Substances (OPPTS) has developed this guideline through a process of harmonization that blended the testing guidance and requirements that existed in the Office of Pollution Prevention and Toxics (OPPT) and appeared in Title 40, Chapter I, Subchapter R of the Code of Federal Regulations (CFR), the Office of Pesticide Programs (OPP) which appeared in publications of the National Technical Information Service (NTIS) and the guidelines published by the Organization for Economic Cooperation and Development (OECD).

The purpose of harmonizing these guidelines into a single set of OPPTS guidelines is to minimize variations among the testing procedures that must be performed to meet the data requirements of the U. S. Environmental Protection Agency under the Toxic Substances Control Act (15 U.S.C. 2601) and the Federal Insecticide, Fungicide and Rodenticide Act (7 U.S.C. 136, *et seq.*).

**Final Guideline Release:** This guideline is available from the U.S. Government Printing Office, Washington, DC 20402 on disks or paper copies: call (202) 512–0132. This guideline is also available electronically in PDF (portable document format) from EPA's Internet Web site at http://www.epa.gov/opptsfrs/home/guidelin.htm. Also, the Agency has developed, and strongly recommends users to solely use, the software program for performing the Up-and-Down Procedure and calculating the LD50 and confidence interval. The software program (AOT425StatPgm) is available on EPA's Internet Web site at http://www.epa.gov/oppfead1/harmonized.

**OPPTS 870.1100 Acute oral toxicity.**

(a) **Scope—Applicability**. This guideline is intended to meet testing requirements of both the Federal Insecticide, Fungicide, and Rodenticida Act (FIFRA) (7 U.S.C. 136, *et seq.*) and the Toxic Substances Control Act (TSCA) (15 U.S.C. 2601).

(2) **Background**. The source material for this revised harmonized test guideline is OPPTS 870.1100 Acute Oral Toxicity, dated August 1998 and OECD test Guideline 425 Acute Oral Toxicity–Up-and-Down Procedure.

(b) **Purpose**. In the assessment and evaluation of the toxic characteristics of a substance, determination of acute oral toxicity is usually an initial step. It provides information on health and environmental hazards likely to arise from short-term exposure by the oral route. Data from an acute study may serve as a basis for classification and labeling. It is traditionally a step in establishing a dosage regimen in subchronic and other studies and may provide initial information on the mode of toxic action of a substance. An evaluation of acute toxicity data should include the relationship, if any, between the exposure of animals to the test substance and the incidence and severity of all abnormalities, including behavioral and clinical abnormalities, the reversibility of observed abnormalities, gross lesions, body weight changes, effects on mortality, and any other toxic effects.

(c) **Definitions**. The definitions in Section 3 of the Toxic Substances Control Act (TSCA) and the definitions in 40 CFR Part 792—Good Laboratory Practice Standards apply to this test guideline. The following definitions also apply to this test guideline.

*Acute oral toxicity* is the adverse effects occurring within a short time of oral administration of a single dose of a substance or multiple doses given within 24 hours.

*Confidence interval (CI)* is an interval estimate, a range of values, intended to include the true $LD_{50}$ with a specified degree of confidence.

*Delayed death* means that an animal does not die or appear moribund within 48 hours, but dies later during the 14-day observation period.

*Dose* is the amount of test substance administered. Dose is expressed as weight (g, mg (grams, milligrams)) or as weight of test substance per unit weight of test animal (e.g., mg/kg (milligrams/kilograms)).

*Dose progression factor*, sometimes termed a dose spacing factor, refers to the multiple by which a dose is increased (i.e., the dose progression) when an animal survives or the divisor by which it is decreased when an animal dies. The dose progression factor is recommended to be the antilog of 1/(the estimated slope of the dose-response curve). The default

dose progression factor is recommended to be 3.2 = antilog 0.5 = antilog (1/2).

*$LD_{50}$* (median lethal dose), oral, is a statistically derived single dose of a substance that can be expected to cause death in 50 per cent of animals when administered by the oral route. The $LD_{50}$ value is expressed in terms of weight of test substance per unit weight of test animal (mg/kg).

*Limit dose* refers to a dose at an upper limitation on testing (2000–5000 mg/kg).

*Moribund status* of an animal refers to being in a state of dying or inability to survive, even if treated.

*Nominal sample size* refers to the total number of tested animals, reduced by one less than the number of like responses at the beginning of the series, or by the number of tested animals up to but not including the pair that creates the first reversal. For example, for a series where X and O indicate opposite animal outcomes (for instance, X could be dies within 48 hours and O survives) in a pattern as follows: OOOXXOXO, we have the total number of tested animals (or sample size in the conventional sense) as 8 and the nominal sample size as 6. This particular example shows 4 animals following a reversal. It is important to note whether a count in a particular part of the guideline refers to the nominal sample size or to the total number tested. For example, the maximum actual number tested is 15. When testing is stopped based on that basis, the nominal sample size will be less than or equal to 15. Members of the nominal sample start with the (r-1)st animal (the animal before the second in the reversal pair) (see reversal below).

*Probit* is an abbreviation for the term "*prob*ability *i*ntegral *t*ransformation" and a probit dose-response model permits a standard normal distribution of expected responses (i.e., one centered to its mean and scaled to its standard deviation, *sigma* ) to doses (typically in a logarithmic scale) to be analyzed as if it were a straight line with slope the reciprocal of *sigma*. A standard normal lethality distribution is symmetric; hence, its mean is also its true $LD_{50}$ or median response.

*Reversal* is a situation where nonresponse is observed at some dose, and a response is observed at the next dose tested, or vice versa (i.e., response followed by nonresponse). Thus, a reversal is created by a pair of responses. The first such pair occurs at animals numbered r-1 and r.

*Sigma* is the standard deviation of a log normal curve describing the range of tolerances of test subjects to the chemical (where a subject is expected capable of responding if the chemical dose exceeds the subject's tolerance). The estimated *sigma* provides an estimate of the variation

among test animals in response to a full range of doses. See slope and probit.

*Slope (of the dose-response curve)* is a value related to the angle at which the dose response curve rises from the dose axis. In the case of probit analysis, when responses are analyzed on a probit scale against dose on a log scale this curve will be a straight line and the slope is the reciprocal of *sigma*, the standard deviation of the underlying test subject tolerances, which are assumed to be normally distributed. See probit and *sigma*.

*Stopping rule* is used in this guideline synonymously with (1) a specific stopping criterion and (2) the collection of all criteria determining when a testing sequence terminates. In particular, for the main test, stopping rule is used in paragraph (e)(2)(ii) of this guideline as a shorthand for the criterion that relies on comparison of ratios to a critical value.

(d) **Approaches to the determination of acute toxicity**. EPA recommends the Up-and-Down Procedure (UDP) as detailed in this guideline and adopted by the Organization for Economic Cooperation and Development (OECD) as test Guideline 425 (see paragraph (n)(1) of this guideline), to assess acute oral toxicity. This method provides a point estimate of lethality and confidence interval around the LD50. Acute oral toxicity testing may also be performed using the Fixed Dose Method of OECD Guideline 420 (see paragraph (n)(2) of this guideline) or the Acute Toxic Class Method of OECD Guideline 423 (see paragraph (n)(3) of this guideline). These methods assess lethality within a dose range.

(e) **Introduction to the UDP**—(1) **Background**. (i) The concept of the up-and-down testing approach was first described by Dixon and Mood (see paragraphs (n)(4) through (n)(7) of this guideline). In 1985, Bruce proposed to use an UDP for the determination of acute toxicity of chemicals (see paragraph (n)(8) of this guideline). There exist several variations of the up-and-down experimental design for estimating an $LD_{50}$. This guideline is derived from the UDP of Bruce as adopted by the American Society for Testing and Materials (ASTM) in 1987 (see paragraph (n)(9) of this guideline) and revised in 1990. A study comparing the results obtained with the UDP, the conventional $LD_{50}$ test and the Fixed Dose Procedure (FDP, OECD Guideline 420) was published in 1995 (see paragraph (n)(10) of this guideline).

(ii) The UDP described in this guideline is of value in minimizing the number of animals required to estimate the acute oral toxicity of a chemical. In addition to the estimation of $LD_{50}$ and CI, the test procedure allows the observation of signs of toxicity. The UDP does not provide information about the slope of the dose-response curve.

(iii) The guideline significantly reduces the number of animals used in comparison to the traditional $LD_{50}$ test, which often required at least 30 animals in a test: (A) The stopping rule limits the number of animals

in a test; (B) sequential dosing introduces further efficiencies in animal use; (C) initial dosing is now set to be below the $LD_{50}$ increasing the percentage of animals in which dosing levels will be sublethal and thereby providing some reduction in pain and distress; and (D) the use of a single sex (usually females) reduces the number of animals needed and minimizes the variability in the test population. In addition, the OECD Guidance Document on Humane Endpoints (see paragraph (n)(11) of this guideline) should be followed in order to reduce the overall suffering of test animals used in this type of toxicity test.

(2) **Initial considerations**—(i) **Choice of starting dose and dose progression factor**. All available information on the test substance should be considered by the testing laboratory prior to conducting the study in order to determine if a preliminary estimate of the $LD_{50}$ and the slope of the dose-response curve can be made. Because the method has a bias toward the starting dose, it is essential that initial dosing occur below the $LD_{50}$. In addition, the UDP performs best when the spacing between doses or dose progression factor is based on an accurate estimate of the slope of the dose-response curve. (See paragraphs (i)(3)(ii) and (m)(1) of this guideline for discussion of dose sequences and starting values.) Initial information may include the identity and chemical structure of the substance; its physical chemical properties; the results of any other *in vitro* or *in vivo* toxicity tests on the substance or mixtures; toxicological data on structurally related substances or similar mixtures; and the anticipated use(s) of the substance. For example, data from an *in vitro* cytotoxicity assay can also be useful as one of the tools in setting a starting dose for the *in vivo* assessment of acute oral toxicity (see paragraphs (n)(10) through (n)(12) of this guideline). (A Guidance Document on Using *In Vitro* Data to Estimate *In Vivo* Starting Doses for Acute Toxicity is available (see paragraph (n)(11) of this guideline), and preliminary information suggests that the use of this approach may further reduce the number of animals used for *in vivo* testing (see paragraph (n)(11) of this guideline). Preliminary estimates of the $LD_{50}$ and the dose-response slope will help in selecting a dose progression factor and a starting dose for testing.

(ii) **Default starting dose and dose progression factor**. If no information is available to make a preliminary estimate of the $LD_{50}$ and the slope of the dose-response curve, results of computer simulations have suggested that starting near 175 mg/kg and using half-log units (corresponding to a dose progression of 3.2) between doses will produce the best results. This starting dose should be modified if the substance is likely to be highly toxic. The half-log spacing provides for a more efficient use of animals, and increases accuracy in the prediction of the $LD_{50}$ value. However, for chemicals with large variability (i.e., shallow dose- response slopes), bias can still be introduced in the lethality estimates and the $LD_{50}$ estimate will have a large statistical error, similar to other acute toxicity methods. To correct for this, the main test includes a stopping rule keyed

to properties of the estimate rather than a fixed number of test observations. (See paragraph (i)(3)(iii) of this guideline.)

(iii) **Delayed toxicity**. The method is easiest to apply to materials that produce death within one or two days. The method would not be practical to use when considerably delayed death (five days or more) can be expected.

(iv) **Computation**. Computers are used to facilitate animal-by-animal calculations that establish testing sequences and provide final estimates. The users of this protocol are strongly urged to solely use the Agency-developed software package (AOT425StatPgm) for performing the test and the calculation of the LD 50. The software is available on EPA's Internet Web site at http://www.epa.gov/oppfead1/harmonized.

(v) **Humane practices**. Moribund animals or animals obviously in pain or showing signs of severe and enduring distress shall be humanely killed, and are considered in the interpretation of the test results in the same way as animals that died on test. Criteria for making the decision to kill moribund or severely suffering animals, and guidance on the recognition of predictable or impending death are the subject of an OECD guidance document (see paragraph (n)(11) of this guideline).

(vi) **Limit test**. A limit test can be used efficiently to identify chemicals that are likely to have low acute toxicity.

(f) **Principle of the limit test**. The limit test is a sequential test that uses a maximum of 5 animals (see paragraphs (i)(2)(i) through (i)(2)(iv) of this guideline). A test dose of 5000 mg/kg is used. The selection of a sequential test plan increases the statistical power and also has been made to intentionally bias the procedure towards rejection of the limit test for compounds with $LD_{50}$s near the limit dose; i.e., to err on the side of safety. As with any limit test protocol, the probability of correctly classifying a compound will decrease as the actual $LD_{50}$ more nearly resembles the limit dose.

(g) **Principle of the Main Test**. (1) The main test consists of a single ordered dose progression in which animals are dosed, one at a time, at 48-hour intervals. The first animal receives a dose a step below the level of the best estimate of the $LD_{50}$. If the animal survives, the dose for the next animal is increased to a factor of one half log times the original dose; if it dies, the dose for the next animal is decreased by a similar dose progression. (Note: 3.2 is the default factor corresponding to a dose progression of one half log unit in the Agency developed software program (AOT425StatPgm). However, this value may be changed. Paragraphs (i)(3)(ii) and (m)(12) of this guideline provide further guidance for choice of dose spacing factor.) Each animal should be observed carefully for up to 48 hours before making a decision on whether and how much to dose the next animal. That decision is based on the 48-hour survival pattern

of all the animals up to that time. (See paragraphs (i)(3)(i) and (i)(3)(v) of this guideline on choice of survival interval.) A combination of stopping criteria is used to keep the number of animals low while adjusting the dosing pattern to reduce the effect of a poor starting value or low slope (see paragraph (i)(3)(iv) of this guideline). Dosing is stopped when one of these criteria is satisfied (see paragraphs (i)(3)(iii) and (k)(2) of this guideline), at which time an estimate of the $LD_{50}$ and a CI are calculated for the test based on the status of all the animals at termination. For most applications, testing will be completed with only 4 animals after initial reversal in animal outcome. The $LD_{50}$ is calculated using the method of maximum likelihood (see paragraphs (k)(2) and (k)(2)(iii) of this guideline.)

(2) The results of the main test procedure serve as the starting point for a computational procedure to provide a CI estimate where feasible. A description of the basis for this CI is outlined in paragraph (k)(3) of this guideline.

(h) **Preparation for testing**—(1) **Selection of animals species**. The preferred rodent species is the rat although other rodent species may be used.

(2) **Single sex selection**. The test is conducted using a single sex in order to reduce variability and as a means of minimizing the number of animals used. Either sex may be used, however, if there is information available indicating differences in sensitivity, the most sensitive sex (usually females) should be tested (see paragraph (n)(11) of this guideline).

(i) Literature surveys of conventional $LD_{50}$ tests show that usually there is little difference in sensitivity between the sexes but, in those cases where differences were observed, females were often slightly more sensitive (see paragraph (n)(10) of this guideline). For chemicals that are direct acting in their toxic mechanism, female rats may have a lower detoxification capacity than males, as measured by specific activity of phase I and II enzymes. However, all available information should be evaluated, for example on chemical analogues and the results of testing for other toxicological endpoints on the chemical itself, as this may indicate that males may be more sensitive than females. Knowledge that metabolic activation is required for a chemical's toxicity can also indicate that males may be the more sensitive sex.

(ii) Occasionally, the results of subsequent testing, for example a subchronic test, may raise concerns that the more sensitive sex had not been used. In such cases, and only when considerable differences between the sexes are suspected, it may be necessary to conduct another full acute oral toxicity study in the second sex. This is preferable to conducting confirmatory testing in a small group of animals of the second sex as a late satellite to the original test because there is a strong possibility that this

would produce results that are difficult to interpret. The impact of conducting a second full test on the overall number of animals used in acute toxicity testing should be small because re-testing is anticipated to be infrequent and the results of the test in one sex, together with data from any subsequent studies, will greatly assist in the selection of starting doses closer to the $LD_{50}$ in the second test.

(3) **Age and weight ranges**. Healthy young adult animals of commonly used laboratory strains should be employed. Females should be nulliparous and non-pregnant. At the commencement of its dosing, each animal should be between 8 weeks and 12 weeks old. In order to minimize the contribution of developmental variability to study outcome, 10 weeks, with a range of ± 1 week is recommended if practical. The weight of each animal should fall in an interval ± 20% of the mean initial weight of all previously dosed animals.

(4) **Housing and feeding conditions**. The temperature in the experimental animal room should be 22°C (± 3°C). The relative humidity should be at least 30% and preferably not exceed 70% other than during room cleaning. Lighting should be artificial, the sequence being 12 hours light and 12 hours dark. The animals are housed individually. For feeding, conventional rodent laboratory diets may be used with an unlimited supply of drinking water.

(5) **Preparation of animals**. The animals are randomly selected, marked to permit individual identification, and kept in their cages for at least 5 days prior to dosing to allow for acclimatization to the laboratory conditions. As with other sequential test designs, care must be taken to ensure that animals are available in the appropriate size and age range for the entire study.

(6) **Preparation of doses**. (i) When necessary, the test substance is dissolved or suspended in a suitable vehicle. The use of an aqueous solution/suspension/emulsion is recommended wherever possible, followed in order of preference by a solution/suspension/emulsion in oil (e.g. corn oil) and then possibly solution in other vehicles. For vehicles other than water the toxicological characteristics of the vehicle should be known. Dosing preparations must be prepared shortly prior to administration unless the stability of the preparation over the period during which it will be used is known. Where preparation shortly before administration is not practicable and the stability of the preparation is not known, this will need to be demonstrated analytically.

(ii) Constant concentration should be used in dosing unless there is clear scientific or regulatory justification for not doing so. The maximum dose volume for administration must not be exceeded. The maximum volume of liquid that can be administered at one time depends on the size of the test animal. In rodents, the volume should not normally exceed

1 ml/100g of body weight; however, in the case of aqueous solutions, 2 ml/100g body weight can be considered.

(7) **Administration of doses**. (i) The test substance is administered in a single dose by gavage using a stomach tube or a suitable intubation cannula. In the unusual circumstance that a single dose is not possible, the dose may be given in smaller fractions over a period not exceeding 24 hours.

(ii) Animals should be fasted prior to dosing (e.g., with the rat, food but not water should be withheld overnight; with the mouse, food but not water should be withheld for 3–4 hours). Following the period of fasting, the animals should be weighed and the test substance administered. The fasted body weight of each animal is determined and the dose is calculated according to the body weight. After the substance has been administered, food may be withheld for a further 3–4 hours in rats or 1–2 hours in mice. Where a dose is administered in fractions over a period of time, it may be necessary to provide the animals with food and water depending on the length of the period.

(i) **The up-and-down testing procedure**—(1) **Choice of limit test and main test**. The limit test is primarily used in situations where the experimenter has information indicating that the test material is likely to be nontoxic, i.e., having toxicity below regulatory limit doses. Information about the toxicity of the test material can be gained from knowledge about similar tested compounds or similar tested mixtures or products, taking into consideration the identity and percentage of components known to be of toxicological significance. In those situations where there is little or no information about its toxicity, or in which the test material is expected to be toxic, the main test should be performed.

(2) **Implementation of the limit test**. (i) The Agency has developed dedicated software for performing the test and calculation of test results (see paragraph (e) (2)(iv) of this guideline).

(ii) Dose one animal at 5000 mg/kg. If the animal dies, conduct the main test starting at 175 mg/kg to determine the $LD_{50}$. If the animal survives, dose two additional animals. If both animals survive, the $LD_{50}$ is greater than the limit dose and the test is terminated (i.e. carried to full 14-day observation without dosing of further animals). If one or both animals die, then dose an additional two animals, one at a time. If an animal unexpectedly dies late in the study, and there are other survivors, it is appropriate to stop dosing and observe all animals to see if other animals will also die during a similar observation period (see paragraph (g)(1) of this guideline for initial observation period). Late deaths should be counted the same as other deaths. The results are evaluated as follows (O=survival and X=death).

(iii) The $LD_{50}$ is less than the test dose (5000 mg/kg) when three or more animals die. If a third animal dies, conduct the main test.

O XO XX

O OX XX

O XX OX

O XX X

(iv) The $LD_{50}$ is greater than the test dose (5000 mg/kg) when three or more animals survive.

O OO

O XO XO

O XO O

O OX XO

O OX O

O XX OO

(v) If a limit test is performed at 2000 mg/kg, animals should be dosed sequentially and testing should be performed on all five animals.

(3) **Implementation of the main test**. (i) The Agency has developed dedicated software for performing the test and calculation of test results (see paragraph (e) (2)(iv) of this guideline).

(ii) Performing the UDP. Single animals are dosed in sequence usually at 48-hour intervals. However, the time interval between dosing is determined by the onset, duration, and severity of toxic signs. Treatment of an animal at the next dose should be delayed until one is confident of survival of the previously dosed animal. The time interval may be adjusted as appropriate, e.g., in case of inconclusive response. The test is simpler to implement when a single time interval is used for making sequential dosing decisions. Nevertheless, it is not necessary to recalculate dosing or likelihood-ratios if the time interval changes midtest. For selecting the starting dose, all available information, including information on structurally related substances and results of any other toxicity tests on the test material, should be used to approximate the $LD_{50}$ as well as the slope of the dose-response curve.

(iii) Choice of starting dose and dose progression. The first animal is dosed a step below the toxicologist's best estimate of the $LD_{50}$. If the animal survives, the second animal receives a higher dose. If the first animal dies or appears moribund, the second animal receives a lower dose. The same dosing decision pattern is followed for each subsequent animal.

The dose progression factor should be chosen to be the antilog of 1/(the estimated slope of the dose-response curve) (a progression of 3.2 corresponds to a slope of 2) and should remain constant throughout testing. Thus, when there is no information on the slope of the substance to be tested, a default dose progression factor of 3.2 is used. Using the default progression factor, doses would be selected from the sequence 1.75, 5.5, 17.5, 55, 175, 550, 1750, 5000. If no estimate of the substance's lethality is available, dosing should be initiated at 175 mg/kg. In most cases, this dose is sublethal and therefore serves to reduce the level of pain and suffering. If animal tolerances to the chemical are expected to be highly variable (i.e., slopes are expected to be less than 2.0), consideration should be given to increasing the dose progression factor beyond the default 0.5 on a log dose scale (i.e., 3.2 progression factor) prior to starting the test. Similarly, for test substances known to have very steep slopes, dose progression factors smaller than the default should be chosen. (Paragraph (m)(3) of this guideline relates choice of dose progression to assumed slope and *sigma* and discusses test performance. Paragraph (m)(1) of this guideline includes a table of dose progressions for whole number slopes ranging from 1 to 8 with starting dose 175 mg/kg.)

(iv) Stopping rules. Dosing continues depending on the fixed-time interval (e.g., 48-hours) outcomes of all the animals up to that time. The testing stops when one of the following stopping criteria first is met:

(A) 3 consecutive animals survive at the upper bound;

(B) 5 reversals occur in any 6 consecutive animals tested;

(C) At least 4 animals have followed the first reversal and the specified likelihood-ratios exceed the critical value. (See paragraphs (k)(2)(iv) and (m)(2) of this guideline). Calculations are made at each dosing, following the fourth animal after the first reversal.).

(v) Total number of doses. For a wide variety of combinations of $LD_{50}$ and slopes, stopping rule in paragraph (i)(3)(iii)(C) of this guideline will be satisfied with 4 to 6 animals after the test reversal. In some cases for chemicals with shallow slope dose-response curves, additional animals (up to a total of fifteen tested) may be needed.

(vi) Calculation. When the stopping criteria have been attained, the estimated $LD_{50}$ should be calculated from the animal outcomes at test termination using the method described in paragraphs (k)(1)(i) and (k)(2)(i) of this guideline.

(vii) Humane practices. Moribund animals killed for humane reasons are considered in the same way as animals that died on test. If an animal unexpectedly dies late in the study and there are other survivors at that dose or above, it is appropriate to stop dosing and observe all animals to see if other animals will also die during a similar observation period.

If subsequent survivors also die, and it appears that all dose levels exceed the $LD_{50}$ it would be most appropriate to start the study again beginning at least two steps below the lowest dose with deaths (and increasing the observation period) since the technique is most accurate when the starting dose is below the $LD_{50}$. If subsequent animals survive at or above the dose of the animal that dies, it is not necessary to change the dose progression since the information from the animal that has now died will be included into the calculations as a death at a lower dose than subsequent survivors, pulling the $LD_{50}$ down.

(j) **Observations**. Animals are observed individually at least once during the first 30 minutes after dosing, periodically during the first 24 hours (with special attention given during the first 4 hours), and daily thereafter, for a total of 14 days, except where they need to be removed from the study and humanely killed for animal welfare reasons or are found dead. However, the duration of observation should not be fixed rigidly. It should be determined by the toxic reactions and time of onset and length of recovery period, and may thus be extended when considered necessary. The times at which signs of toxicity appear and disappear are important, especially if there is a tendency for toxic signs to be delayed (see paragraph (n)(15) of this guideline). All observations of toxic signs are systematically recorded with individual records being maintained for each animal. Additional observations will be necessary if the animals continue to display signs of toxicity.

(1) **Toxic signs**. Observations should include changes in skin and fur, eyes and mucous membranes, and also respiratory, circulatory, autonomic and central nervous systems, and somatomotor activity and behavior pattern. Attention should be directed to observations of tremors, convulsions, salivation, diarrhea, lethargy, sleep and coma. The principles and criteria summarized in the Humane Endpoints Guidance Document (see paragraph (n)(11) of this guideline) should be taken into consideration. Animals found in a moribund condition and animals showing severe pain and enduring signs of severe distress should be humanely killed. When animals are killed for humane reasons or found dead, the time of death should be recorded as precisely as possible.

(2) **Body weight**. Individual weights of animals should be determined shortly before the test substance is administered and at least weekly thereafter. Weight changes should be calculated and recorded. At the end of the test surviving animals are weighed and then humanely killed.

(3) **Pathology**. All animals (including those which die during the test or are removed from the study for animal welfare reasons) should be subjected to gross necropsy. All gross pathological changes should be recorded for each animal. Microscopic examination of organs showing evidence of gross pathology in animals surviving 24 or more hours after the

initial dosing may also be considered because it may yield useful information.

(k) **Data and reporting**—(1) **Data**. Individual animal data should be provided. Additionally, all data should be summarized in tabular form, showing for each test dose the number of animals used, the number of animals displaying signs of toxicity (see paragraph (n)(15) of this guideline), the number of animals found dead during the test or killed for humane reasons, time of death of individual animals, a description and the time course of toxic effects and reversibility, and necropsy findings. A rationale for the starting dose and the dose progression and any data used to support this choice should be provided.

(2) **Calculation of $LD_{50}$ for the main test**—(i) **Maximum likelihood**. The $LD_{50}$ is calculated using the maximum likelihood method, except in the exceptional cases described in paragraphs (k)(2)(ii) and (m)(3) of this guideline. The Agency-developed software program (AOT425StatPgm) available on EPA's Internet Web site at http://www.epa.gov/oppfead1/harmonized should be used to perform this calculation. The following statistical details may be helpful in implementing the maximum likelihood calculations suggested (with an assumed *sigma*). All deaths, whether immediate or delayed or humane kills, are incorporated for the purpose of the maximum likelihood analysis. Following Dixon (see paragraph (n)(5) of this guideline), the likelihood function is written as follows:

$L = L_1 L_2 \ldots L_n$ ,

where

$L$ is the likelihood of the experimental outcome, given $\mu$ and *sigma*, and n the total number of animals tested.

$L_i = 1 - F(Z_i)$ if the $i^{th}$ animal survived, or

$L_i = F(Z_i)$ if the $i^{th}$ animal died,

where

$F$ = cumulative standard normal distribution,

$Z_i = [\log(d_i) - \mu] / sigma$

$d_i$ = dose given to the $i^{th}$ animal, and

*sigma* = standard deviation in log units of dose (which is not the log standard deviation).

An estimate of the log of the true $LD_{50}$ is given by the value of $\mu$ that maximizes the likelihood L (see paragraph (k)(2)(iii) of this guideline).

An estimate of *sigma* of 0.5 is used unless a better generic or case-specific value is available.

(ii) **Special circumstances**. Under some circumstances, statistical computation will not be possible or will likely give erroneous results. Special means to determine/report an estimated $LD_{50}$ are available for these circumstances as described in the following paragraphs (k)(2)(ii)(A), (k)(2)(ii)(B), and (k)(2)(ii)(C). If none of these situations occurs, then the $LD_{50}$ is calculated using the maximum likelihood method.

(A) If testing stopped based on the criterion in paragraph (i)(3)(iii)(C) of this guideline (i.e., a boundary dose was tested repeatedly), or if the upper bound dose ended testing, then the $LD_{50}$ is reported to be above the upper bound.

(B) If all the dead animals have higher doses than all the live animals (or if all live animals have higher doses than all the dead animals, although this is practically unlikely), then the $LD_{50}$ is between the doses for the live and the dead animals. These observations give no further information on the exact value of the $LD_{50}$. Still, a maximum likelihood $LD_{50}$ estimate can be made provided there is a prior value for *sigma*. The $LD_{50}$ estimate is only as good as the validity of the assumed signa. However, Case 3 as described in paragraph (m)(3)(iii) of this guideline and here is most likely to occur because the dose progression (based on the assumed signma) is too wide. The stopping criterion in paragraph (i)(3)(iii)(C) describes one such circumstance.

(C) If the live and dead animals have only one dose in common and all the other dead animals have higher doses and all the other live animals lower doses, or vice versa, then the $LD_{50}$ equals their common dose. If a closely related substance is tested, testing should proceed with a smaller dose progression.

(iii) **Maximum likelihood calculation**. Maximum likelihood calculation should be performed using a dedicated program developed by and available from EPA (see paragraph (n)(16) of this guideline). If other computer programs are used, the laboratory should take care in handling special cases described in this guideline and the documentation of test performance available on EPA's Internet Web site at http://www.epa.gov/oppfead1/harmonized. Typical instructions for these packages are given in appendices to the ASTM Standard E 1163-87 (see paragraph (n)(9) of this guideline). (The *sigma* used in the BASIC program in (see paragraph (n)(9) of this guideline) will need to be edited to reflect the parameters of the UDP.) The program's output is an estimate of log ($LD_{50}$) and its standard error.

(iv) **Stopping rule**. The likelihood-ratio stopping rule in paragraph (i)(3)(iii)(C) of this guideline is based on three measures of test progress, that are of the form of the likelihood in paragraph (k)(2) of this guideline,

with different values for μ. Comparisons are made after each animal tested after the sixth that does not already satisfy the criteria in paragraph (i)(3)(iii)(A) or paragraph (i)(3)(iii)(B) guideline. The equations for the likelihood-ratio criteria are provided by following the steps in paragraph (m)(2)(vii) of this guideline. These comparisons are most readily performed in an automated manner and can be executed repeatedly, for instance, by a spreadsheet routine such as that also provided in paragraph (m)(2)(vii) of this guideline. If the criterion is met, testing stops and the $LD_{50}$ can be calculated by the maximum likelihood method.

(3) **Computation of CI**. (i) Following the main test and estimated $LD_{50}$ calculation, it may be possible to compute interval estimates for the $LD_{50}$. The Agency-developed software program AOT425StatPgm will perform the calculations. Any of these CIs provides valuable information on the reliability and utility of the main test that was conducted. A wide CI indicates that there is more uncertainty associated with the estimated $LD_{50}$. In this case, the reliability of the estimated $LD_{50}$ is low and the usefulness of the estimated $LD_{50}$ may be marginal. A narrow interval indicates that there is relatively little uncertainty associated with the estimated $LD_{50}$. In this case, the reliability of the estimated $LD_{50}$ is high and the usefulness of the estimated $LD_{50}$ is good. This means that if the main test were to be repeated, the new estimated $LD_{50}$ is expected to be close to the original estimated $LD_{50}$ and both of these estimates are expected to be close to the true $LD_{50}$.

(ii) Depending on the outcome of the main test, one of two different types of interval estimates of the true $LD_{50}$ is calculated:

(A) When at least three different doses have been tested and the middle dose has at least one animal that survived and one animal that died, a profile-likelihood-based computational procedure is used to obtain a CI that is expected to contain the true $LD_{50}$ 95% of the time. However, because small numbers of animals are expected to be used, the actual level of confidence is generally not exact (see paragraph (n)(19) of this guideline). The random stopping rule improves the ability of the test overall to respond to varying underlying conditions, but also causes the reported level of confidence and the actual level of confidence to differ somewhat (see paragraph (n)(18) of this guideline).

(B) If all animals survive at or below a given dose level and all animals die when dosed at the next higher dose level, an interval is calculated that has as its lower limit the highest dose tested where all the animals survive and has as its upper limit the dose level where all the animals died. This interval is labeled as "approximate." The exact confidence level associated with this interval cannot be specifically determined. However, because this type of response would only occur when the dose-response is steep, in most cases, the true $LD_{50}$ is expected to be contained

within the calculated interval or be very close to it. This interval will be relatively narrow and sufficiently accurate for most practical use.

(iii) In some instances, CIs are reported as infinite, through including either zero at the lower end or infinity at the upper end, or both. Such intervals may occur, for example, when the response profile is relatively flat or relatively uncertain.

(iv) Implementing this set of procedures requires specialized computation which is either by use of a dedicated program to be available through the Environmental Protection Agency (EPA) or OECD or developed following technical details available from the EPA or OECD. Achieved coverage of these intervals and properties of the dedicated program are described in a report (see paragraph (n)(16) of this guideline) also available through the EPA. Paragraph (m)(3) of this guideline provides information on choice of dose progression and initial dose level for the UDP and describes test performance under a variety of circumstances.

(l) **Test reporting**. The test report must include the following information:

(1) Test substance:

(i) Physical nature, purity and physicochemical properties (including isomerization);

(ii) Identification data.

(2) Vehicle (if appropriate): Justification for choice of vehicle, if other than water.

(3) Test animals:

(i) Species/strain used;

(ii) Microbiological status of the animals, when known;

(iii) Number, age and sex of animals;

(iv) Rationale for use of males instead of females;

(v) Source, housing conditions, diet, etc.;

(vi) Individual weights of animals at the start of the test, at day 7, and at day 14.

(4) Test conditions:

(i) Rationale for initial dose level selection, dose progression factor and for follow-up dose levels;

(ii) Details of test substance formulation;

(iii) Details of the administration of the test substance;

(iv) Details of food and water quality (including diet type/source, water source).

(5) Results:

(i) Body weight/body weight changes;

(ii) Tabulation of response data by sex (if both sexes are used) and dose level for each animal (i.e., animals showing signs of toxicity including nature, severity, duration of effects, and mortality);

(iii) Time course of onset of signs of toxicity and whether these were reversible for each animal;

(iv) Necropsy findings and any histopathological findings for each animal, if available;

(v) $LD_{50}$ and CI (which the AOT425StatPgm software package uses);

(vi) Statistical treatment of results (description of computer routine used and spreadsheet tabulation of calculations). If other than Agency-supplied software is used, give explanation of now the program was verified against Agency software.

(6) Discussion and interpretation of results.

(7) Conclusions.

(m) **Additional guidance for toxicologists**—(1) **Dosing procedure—dose sequence for main test**. (i) Up-and-down dosing procedure. For each run, animals are dosed, one at a time, usually at 48-hour intervals. The first animal receives a dose a step below the level of the best estimate of the $LD_{50}$. This selection reflects an adjustment for a tendency to bias away from the $LD_{50}$ in the direction of the initial starting dose in the final estimate (see paragraph (e)(2)(ii) of the guideline). The overall pattern of outcomes is expected to stabilize as dosing is adjusted for each subsequent animal. Paragraph (m)(1)(iii) of this guideline provides further guidance for choice of dose spacing factor.

(ii) Default dose progression. Once the starting dose and dose spacing are decided, the toxicologist should list all possible doses including the upper bound (usually 2000 or 5000 mg/kg). Doses that are close to the upper bound should be removed from the progression. The stepped nature of the UDP design provides for the first few doses to function as a self-adjusting sequence. Because of the tendency for positive bias, in the event that nothing is known about the substance, a starting dose of 175 mg/kg is recommended. If the default procedure is to be used for the main test, dosing will be initiated at 175 mg/kg and doses will be spaced by a factor of 0.5 on a log dose scale. The doses to be used include 1.75,

5.5, 17.5, 55, 175, 550, 2000 or, for specific regulatory needs, 1.75, 5.5, 17.5, 55, 175, 550, 1750, 5000. For certain highly toxic substances, the dosing sequence may need to be extended to lower values.

(iii) In the event a dose progression factor other than the default is deemed suitable, the following Table 1 provides dose progressions for whole number multiples of slope, from 1 to 8. (See paragraph (m)(3) of this guideline for discussion of influence of dose progression on test performance.)

**Table 1.—Dose Progressions for UDP**

(Choose a Slope and Read Down the Column. All doses in mg/kg body weight)

| Slope = | 1 | 2 | 3 | 4 | 5 | 6 | 7 | 8 |
|---|---|---|---|---|---|---|---|---|
| | 0.175* | 0.175* | 0.175* | 0.175* | 0.175* | 0.175* | 0.175* | 0.175* |
| | | | | | | | 0.243* | 0.233* |
| | | | | | 0.28 | 0.26 | | |
| | | | | 0.31 | | | 0.34 | 0.31 |
| | | | 0.38 | | | 0.38 | | |
| | | | | | | | | 0.41 |
| | | | | | 0.44 | | 0.47 | |
| | | 0.55 | | .55 | | 0.55 | | 0.55 |
| | | | | 0.70 | | 0.65 | | |
| | | | | | | | 0.74 | |
| | | | .81 | | | .81 | | |
| | | | | 0.98 | | | 0.91 | 0.98 |
| | | | | | 110 | 1.19 | | |
| | | | | | | | 1.26 | 1.31 |
| | 1.75 | 1.75 | 1.75 | 1.75 | 1.75 | 1.75 | 1.75 | 1.75 |
| | | | | | | | 2.43 | 2.33 |
| | | | | | 2.8 | 2.6 | | |
| | | | | 3.1 | | | 3.4 | 3.1 |
| | | | 3.8 | | | 3.8 | | |
| | | | | | 4.4 | | | 4.1 |
| | | | | | | | 4.7 | |
| | | 5.5 | | 5.5 | 5.5 | | 5.5 | |
| | | | | | 7.0 | | 6.5 | |
| | | | | | | | | 7.4 |
| | | | 8.1 | | | 8.1 | | |
| | | | | 9.8 | | | 9.1 | 9.8 |
| | | | | | 11.0 | 11.9 | | |
| | | | | | | | 12.6 | 13.1 |
| | 17.5 | 17.5 | 17.5 | 17.5 | 17.5 | 17.5 | 17.5 | 17.5 |
| | | | | | | | 24.3 | 23.3 |
| | | | | | 28 | 26 | | |
| | | | | 31 | | | 34 | 31 |
| | | | .38 | | | 38 | | |
| | | | | | 44 | | | 41 |
| | | | | | | | 47 | |
| | | 55 | | 55 | | 55 | | 55 |
| | | | | | | | 65 | |
| | | | | | 70 | | | 74 |
| | | | 81 | | | 81 | | |
| | | | | 98 | | | 91 | 98 |
| | | | | | 110 | 119 | | |
| | | | | | | | 126 | 131 |
| | 175 | 175 | 175 | 175 | 175 | 175 | 175 | 175 |
| | | | | | | | 243 | 233 |
| | | | | | 280 | 260 | | |
| | | | | 310 | | | 340 | 310 |
| | | | 380 | | | 380 | | |
| | | | | | 440 | | | 410 |
| | | | | | | | 470 | |
| | | 550 | | 550 | | 550 | | 550 |
| | | | | | | | 650 | |
| | | | | | 700 | | | 740 |
| | | | 810 | | | 810 | | |
| | | | | 980 | | | 910 | 980 |
| | | | | | 1100 | 1190 | | |
| | | | | | | | 1260 | 1310 |
| | 1750 | 1750 | 1750 | 1750 | 1750 | 1750 | 1750 | 1750 |
| | | | | | | | 2430 | 2330 |
| | | | | | 2800 | 2600 | | |
| | | | | 3100 | | | | 3100 |
| | | | | | | 3800 | 3400 | |
| | | | | | | | | 4100 |
| | 5000 | 5000 | 5000 | 5000 | 5000 | 5000 | 5000 | 5000 |

* If lower doses are needed, continue progressions to a lower dose

(2) **Computations for the likelihood-ratio stopping rules.** (i) As described in paragraph (i)(3)(iii) of this guideline, the main test may be completed on the basis of the first of three stopping criteria to occur. In any case, even if none of the stopping criteria is satisfied, dosing would stop when 15 animals are dosed. Tables 2, 4, and 6 in paragraphs (m)(2)(ii), (m)(2)(iii), and (m)(2)(iv), respectively, of this guideline illustrate examples where testing has started with no information, so the rec-

ommended default starting value, 175 mg/kg, and the recommended default dose progression factor, 3.2 or one half log, have been used. Tables 3, 5, and 7 in paragraphs (m)(2)(ii), (m)(2)(iii), and (m)(2)(iv), respectively, illustrate how Tables 2, 4, and 6, respectively, would appear in the dedicated program referenced in paragraph (k)(3)(iv) (see also paragraph (n)(16)).

(ii) The following Tables 2 and 3 show how the main test would stop if 3 animals have survived at the limit dose of 5000 mg/kg. (This example illustrates situations where a limit test was not thought appropriate *a priori*).

Table 2. Example of Stopping Criterion in Paragraph (i)(3)(iii)(A) using 5000 mg/kg.

Stop after animal #6 because 3 animals survive at limit of 5000 mg/kg (#4-#6).

| 1 | 2 | 3 | 4 | 5 | 6 | 7 | 8 | 9 | 10 | 11 | 12 |
|---|---|---|---|---|---|---|---|---|---|---|---|
| Step | (I)nclude; (E)xclude | Dose | (X)response (O)non-resp. OK | Included in nominal *n* | log10 Dose | LD50 = Prob. of response | #DIV/0! likelihood contribn. (ln *Li*) | LD50 = Prob. of response | #DIV/0! likelihood contribn. (ln *Li*) | LD50 = Prob. of response | #DIV/0! likelihood contribn. (ln *Li*) |
| 1 | I | 175 | O | no | 2.2430 | #DIV/0! | #DIV/0! | #DIV/0! | #DIV/0! | #DIV/0! | #DIV/0! |
| 2 | I | 550 | O | no | 2.7404 | #DIV/0! | #DIV/0! | #DIV/0! | #DIV/0! | #DIV/0! | #DIV/0! |
| 3 | I | 1750 | O | no | 3.2430 | #DIV/0! | #DIV/0! | #DIV/0! | #DIV/0! | #DIV/0! | #DIV/0! |
| 4 | I | 5000 | O | no | 3.6990 | #DIV/0! | #DIV/0! | #DIV/0! | #DIV/0! | #DIV/0! | #DIV/0! |
| 5 | I | 5000 | O | no | 3.6990 | #DIV/0! | #DIV/0! | #DIV/0! | #DIV/0! | #DIV/0! | #DIV/0! |
| 6 | I | 5000 | O | no | 3.6990 | #DIV/0! | #DIV/0! | #DIV/0! | #DIV/0! | #DIV/0! | #DIV/0! |
| 7 | E | | | | - | | | | | | |
| 8 | E | | | | - | | | | | | |
| 9 | E | | | | - | - | - | - | - | - | - |
| 10 | E | | | | - | - | - | - | - | - | - |
| 11 | E | | | | - | - | - | - | - | - | - |
| 12 | E | | | | - | | | | - | - | - |
| 13 | E | | | | - | | | | - | - | - |
| 14 | E | | | | - | | | | - | - | - |
| 15 | E | | | | - | - | - | - | - | - | - |
| Nominal Sample size = | | | | 0 | | | | | | | |
| Actual number tested = | | | | 6 | | | | | | | |

Ignore all calculation cells. No reversal in direction of response.

Maximum Likelihood Calculations cannot be completed. LD50 is greater than 5000 mg/kg.

Calculated maximum likelihood estimate of LD50 = none

Table 3. Example of Stopping Criterion in Paragraph (i)(3)(iii)(A) of this Guideline Using 5000 mg/kg

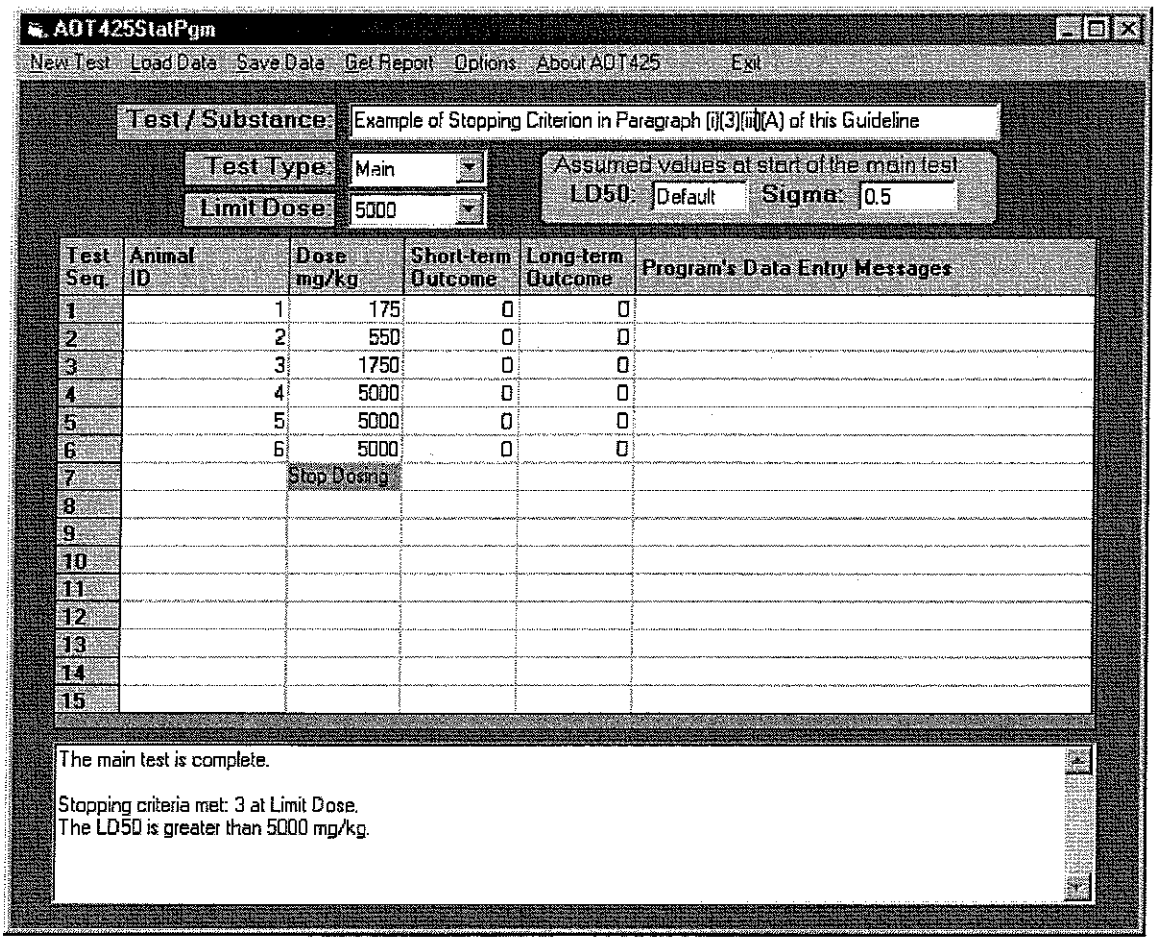

AOT425StatPgm

New Test Load Data Save Data Get Report Options About AOT425 Exit

Test / Substance: Example of Stopping Criterion in Paragraph (i)(3)(iii)(A) of this Guideline

Test Type: Main

Limit Dose: 5000

Assumed values at start of the main test: LD50: Default Sigma: 0.5

| Test Seq. | Animal ID | Dose mg/kg | Short-term Outcome | Long-term Outcome | Program's Data Entry Messages |
|---|---|---|---|---|---|
| 1 | 1 | 175 | 0 | 0 | |
| 2 | 2 | 550 | 0 | 0 | |
| 3 | 3 | 1750 | 0 | 0 | |
| 4 | 4 | 5000 | 0 | 0 | |
| 5 | 5 | 5000 | 0 | 0 | |
| 6 | 6 | 5000 | 0 | 0 | |
| 7 | | Stop Dosing | | | |
| 8 | | | | | |
| 9 | | | | | |
| 10 | | | | | |
| 11 | | | | | |
| 12 | | | | | |
| 13 | | | | | |
| 14 | | | | | |
| 15 | | | | | |

The main test is complete.

Stopping criteria met: 3 at Limit Dose.
The LD50 is greater than 5000 mg/kg.

(iii) The following Tables 4 and 5 show how a particular sequence of 5 reversals in 6 tested animals could occur and allow test completion.

Table 4. Example of Stopping Criterion in Paragraph (i)(3)(iii)(B).

Stop after animal #7 because 5 reversals in 6 consecutive animals tested (#2-#7).

| 1 | 2 | 3 | 4 | 5 | 6 | 7 | 8 | 9 | 10 | 11 | 12 |
|---|---|---|---|---|---|---|---|---|---|---|---|
| Step | (I)nclude; (E)xclude | Dose | (X)response (O)non-resp. OK | Included in nominal *n* | log10 Dose | LD50 = Prob. of response | 31.0 likelihood contribn. (ln *Li*) | LD50 = Prob. of response | 12.4 likelihood contribn. (ln *Li*) | LD50 = Prob. of response | 77.6 likelihood contribn. (ln *Li*) |
| 1 | I | 175 | X | no | 2.2430 | 0.9335 | -0.0688 | 0.9892 | -0.0108 | 0.7602 | -0.2742 |
| 2 | I | 55 | X | yes | 1.7404 | 0.6905 | -0.3703 | 0.9020 | -0.1031 | 0.3826 | -0.9607 |
| 3 | I | 17.5 | O | yes | 1.2430 | 0.3095 | -0.3703 | 0.6174 | -0.9607 | 0.0980 | -0.1031 |
| 4 | I | 55 | X | yes | 1.7404 | 0.6905 | -0.3703 | 0.9020 | -0.1031 | 0.3826 | -0.9607 |
| 5 | I | 17.5 | O | yes | 1.2430 | 0.3095 | -0.3703 | 0.6174 | -0.9607 | 0.0980 | -0.1031 |
| 6 | I | 55 | X | yes | 1.7404 | 0.6905 | -0.3703 | 0.9020 | -0.1031 | 0.3826 | -0.9607 |
| 7 | I | 17.5 | O | yes | 1.2430 | 0.3095 | -0.3703 | 0.6174 | -0.9607 | 0.0980 | -0.1031 |
| 8 | E | | | | - | - | - | - | - | - | - |
| 9 | E | | | | - | - | - | - | - | - | - |
| 10 | E | | | | - | - | - | - | - | - | - |
| 11 | E | | | | - | - | - | - | - | - | - |
| 12 | E | | | | - | - | - | - | - | - | - |
| 13 | E | | | | - | - | - | - | - | - | - |
| 14 | E | | | | - | - | - | - | - | - | - |
| 15 | E | | | | - | - | - | - | - | - | - |
| Nominal Sample size = | | | | 6 | | | | | | | |
| Actual number tested = | | | | 7 | | | | | | | |
| Dose-averaging estimator | | | | 31.02 | | | | | | | |
| log10 = | | | | 1.492 | | | | | | | |
| log-likelihood sums: | | | | | | | -2.2906 | | -3.2021 | | -3.4655 |
| likelihoods: | | | | | | | 0.1012 | | 0.0407 | | 0.0313 |
| likelihood ratios: | | | | | | | | | 2.4880 | | 3.2378 |
| Individual ratios exceed critical value? | | | | critical= | 2.5 | | | | FALSE | | TRUE |
| Both ratios exceed critical value? | | | | | | | | | FALSE | | |
| Calculated maximum likelihood estimate of LD50 = | | | | | 29.6 | | | | | | |

Automated calculation; not relevant to this case.

Final estimate obtained from Maximum Likelihood Calculations

Table 5. Example of Stopping Criterion in Paragraph (i)(3)(iii)(B) of this Guideline.

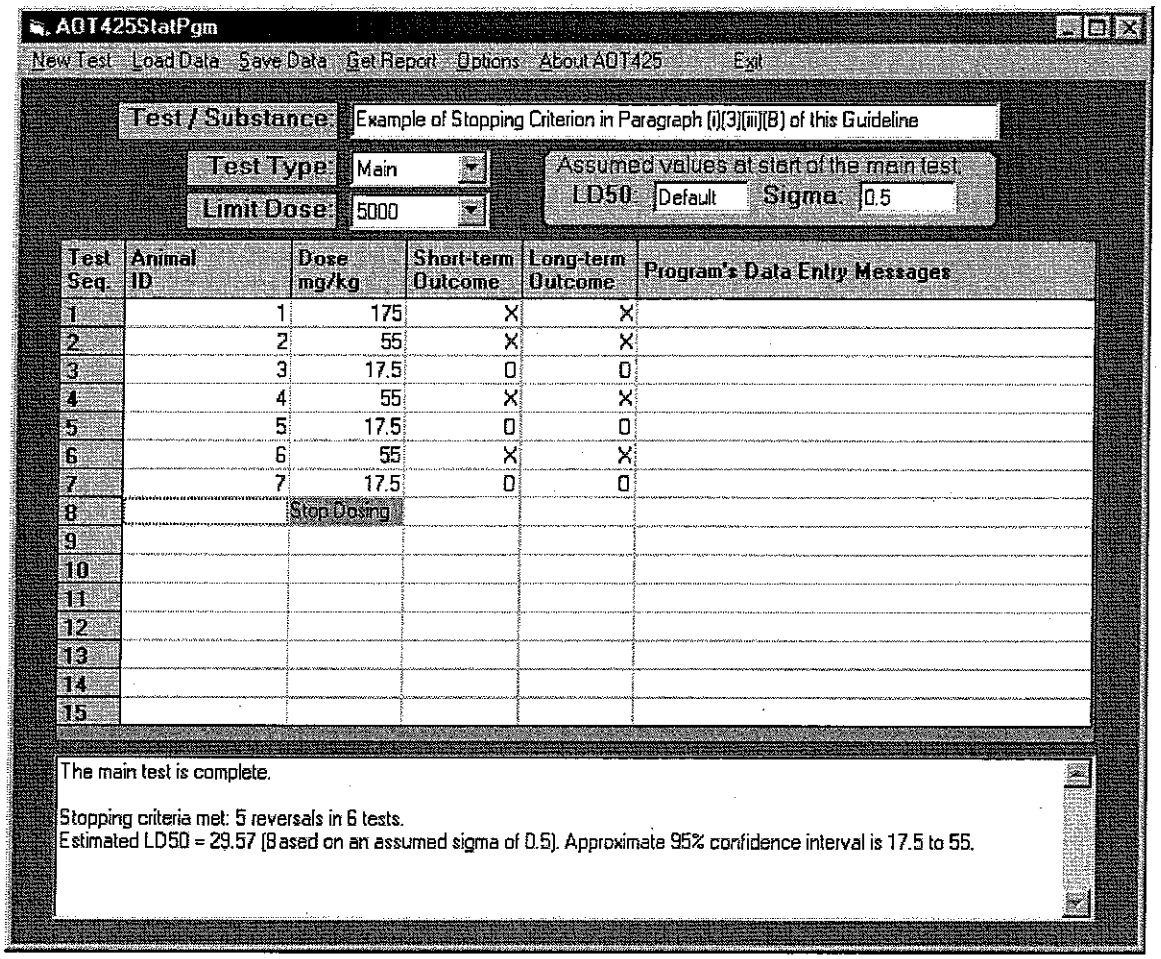

AOT425StatPgm

New Test Load Data Save Data Get Report Options About AOT425 Exit

Test / Substance: Example of Stopping Criterion in Paragraph (i)(3)(iii)(B) of this Guideline

Test Type: Main

Limit Dose: 5000

Assumed values at start of the main test: LD50: Default Sigma: 0.5

| Test Seq. | Animal ID | Dose mg/kg | Short-term Outcome | Long-term Outcome | Program's Data Entry Messages |
|---|---|---|---|---|---|
| 1 | 1 | 175 | X | X | |
| 2 | 2 | 55 | X | X | |
| 3 | 3 | 17.5 | 0 | 0 | |
| 4 | 4 | 55 | X | X | |
| 5 | 5 | 17.5 | 0 | 0 | |
| 6 | 6 | 55 | X | X | |
| 7 | 7 | 17.5 | 0 | 0 | |
| 8 | | Stop Dosing | | | |
| 9 | | | | | |
| 10 | | | | | |
| 11 | | | | | |
| 12 | | | | | |
| 13 | | | | | |
| 14 | | | | | |
| 15 | | | | | |

The main test is complete.

Stopping criteria met: 5 reversals in 6 tests.
Estimated LD50 = 29.57 (Based on an assumed sigma of 0.5). Approximate 95% confidence interval is 17.5 to 55.

(iv) Finally, the following Tables 6 and 7 illustrate a situation several animals into a test, where neither the criterion in paragraph (i)(3)(iii)(A) nor the criterion in paragraph (i)(3)(iii)(B) of this guideline has been met, a reversal of response has occurred followed by 4 tested animals, and, consequently, the criterion in paragraph (i)(3)(iii)(C) of this guideline must be evaluated as well.

Table 6. Example of Stopping Criterion in Paragraph (i)(3)(iii)(C).

Stop when LR criterion is first met, here at animal #9.
Check LR criterion starting at animal #6.

| Assumed slope | 2 | sigma = | 0.5 |
|---|---|---|---|

| Parameters of convergence criterion | |
|---|---|
| critical LR | 2.5 |
| factor of LD50 | 2.5 |

Result: The LR criterion is met

| 1 | 2 | 3 | 4 | 5 | 6 | | 7 | 8 | 9 | 10 | 11 | 12 |
|---|---|---|---|---|---|---|---|---|---|---|---|---|
| Step | (I)nclude; (E)xclude | Dose | (X)response (O)non-resp. OK | Included in nominal *n* | log10 Dose | Contrib.to DAE | LD50 = Prob. of response | 1292.8 likelihood contribn. (ln *Li*) | LD50 = Prob. of response | 517.1 likelihood contribn. (ln *Li*) | LD50 = Prob. of response | 3232.0 likelihood contribn. (ln *Li*) |
| 1 | I | 175 | O | no | 2.2430 | 0.0000 | 0.0412 | -0.0421 | 0.1733 | -0.1903 | 0.0057 | -0.0057 |
| 2 | I | 550 | O | yes | 2.7404 | 2.7404 | 0.2289 | -0.2600 | 0.5214 | -0.7368 | 0.0620 | -0.0640 |
| 3 | I | 1750 | X | yes | 3.2430 | 3.2430 | 0.6037 | -0.5046 | 0.8552 | -0.1564 | 0.2971 | -1.2138 |
| 4 | I | 550 | O | yes | 2.7404 | 2.7404 | 0.2289 | -0.2600 | 0.5214 | -0.7368 | 0.0620 | -0.0640 |
| 5 | I | 1750 | X | yes | 3.2430 | 3.2430 | 0.6037 | -0.5046 | 0.8552 | -0.1564 | 0.2971 | -1.2138 |
| 6 | I | 550 | O | yes | 2.7404 | 2.7404 | 0.2289 | -0.2600 | 0.5214 | -0.7368 | 0.0620 | -0.0640 |
| 7 | I | 1750 | O | yes | 3.2430 | 3.2430 | 0.6037 | -0.9257 | 0.8552 | -1.9323 | 0.2971 | -0.3525 |
| 8 | I | 5000 | X | yes | 3.6990 | 3.6990 | 0.8800 | -0.1279 | 0.9756 | -0.0247 | 0.6477 | -0.4344 |
| 9 | I | 1750 | X | yes | 3.2430 | 3.2430 | 0.6037 | -0.5046 | 0.8552 | -0.1564 | 0.2971 | -1.2138 |
| 10 | E | | | | - | 0.0000 | - | - | - | - | - | - |
| 11 | E | | | | - | 0.0000 | - | - | - | - | - | - |
| 12 | E | | | | - | 0.0000 | - | - | - | - | - | - |
| 13 | E | | | | - | 0.0000 | - | - | - | - | - | - |
| 14 | E | | | | - | 0.0000 | - | - | - | - | - | - |
| 15 | E | | | | - | 0.0000 | - | - | - | - | - | - |
| Nominal Sample size = | | | | 8 | | | | | | | | |
| Actual number tested = | | | | 9 | | | | | | | | |
| Dose-averaging estimator | | | | 1292.78 | | | | | | | | |
| log10 = | | | | 3.112 | | | | | | | | |
| log-likelihood sums: | | | | | | | | -3.3894 | | -4.8270 | | -4.6260 |
| likelihoods: | | | | | | | | 0.0337 | | 0.0080 | | 0.0098 |
| likelihood ratios: | | | | | | | | | | 4.2104 | | 3.4436 |
| Individual ratios exceed critical value? | | | | critical= | 2.5 | | | | | TRUE | | TRUE |
| Both ratios exceed critical value? | | | | | | | | | | TRUE | | |
| Calculated maximum likelihood estimate of LD50 = | | | | | | 1329.6 | | | | | | |

Final estimate obtained from Maximum Likelihood Calculations

Table 7. Example of Stopping Criterion in Paragraph (i)(3)(iii)(C) of this Guideline.

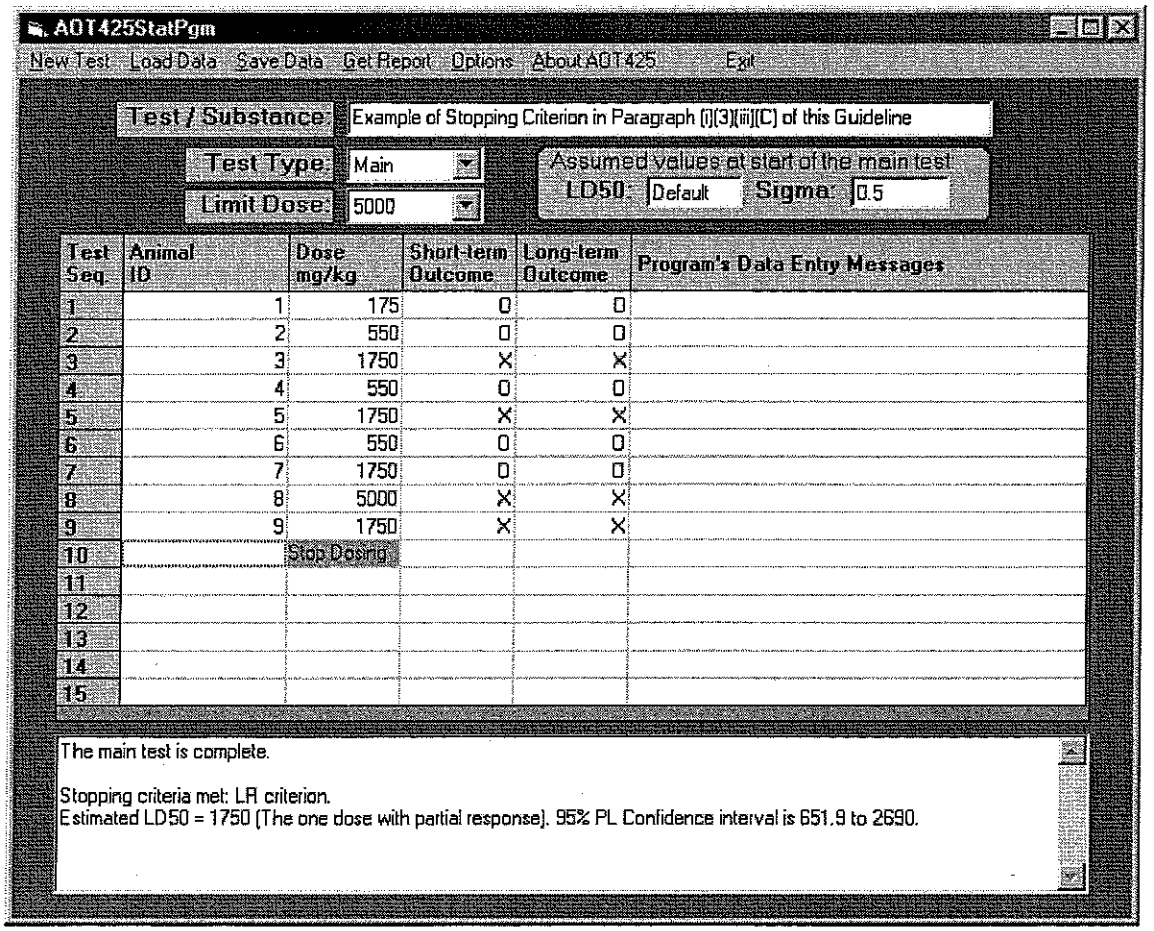

AOT425StatPgm

New Test Load Data Save Data Get Report Options About AOT425 Exit

Test / Substance: Example of Stopping Criterion in Paragraph (i)(3)(iii)(C) of this Guideline

Test Type: Main

Limit Dose: 5000

Assumed values at start of the main test: LD50: Default Sigma: 0.5

| Test Seq. | Animal ID | Dose mg/kg | Short-term Outcome | Long-term Outcome | Program's Data Entry Messages |
|---|---|---|---|---|---|
| 1 | 1 | 175 | O | O | |
| 2 | 2 | 550 | O | O | |
| 3 | 3 | 1750 | X | X | |
| 4 | 4 | 550 | O | O | |
| 5 | 5 | 1750 | X | X | |
| 6 | 6 | 550 | O | O | |
| 7 | 7 | 1750 | O | O | |
| 8 | 8 | 5000 | X | X | |
| 9 | 9 | 1750 | X | X | |
| 10 | | Stop Dosing | | | |
| 11 | | | | | |
| 12 | | | | | |
| 13 | | | | | |
| 14 | | | | | |
| 15 | | | | | |

The main test is complete.

Stopping criteria met: LR criterion.
Estimated LD50 = 1750 (The one dose with partial response). 95% PL Confidence interval is 651.9 to 2690.

(v) Criterion in paragraph (i)(3)(iii)(C) of this guideline calls for a likelihood-ratio stopping rule to be evaluated after testing each animal, starting with the fourth tested following the reversal. Three "measures of test progress" are calculated. Technically, these measures of progress are likelihoods, as recommended for the maximum-likelihood estimation of the $LD_{50}$. The procedure is closely related to calculation of a CI by a likelihood-based procedure.

(vi) The basis of the procedure is that when enough data have been collected, a point estimate of the $LD_{50}$ should be more strongly supported than values above and below the point estimate, where statistical support is quantified using likelihood. Therefore three likelihood values are calculated: A likelihood at an $LD_{50}$ point estimate (called the rough estimate or dose-averaging estimate in the example), a likelihood at a value below the point estimate, and a likelihood at a value above the point estimate. Specifically, the low value is taken to be the point estimate divided by 2.5 and the high value is taken to be the point estimate multiplied by 2.5.

(vii) The likelihood values are compared by calculating ratios of likelihoods, and then determining whether these likelihood-ratios (LR) exceed a critical value. Testing stops when the ratio of the likelihood for the point estimate exceeds each of the other likelihoods by a factor of 2.5, which is taken to indicate relatively strong statistical support for the point estimate. Therefore two likelihood-ratios (LRs) are calculated, a ratio of likelihoods for the point estimate and the point estimate divided by 2.5, and a ratio for the point estimate and the estimate times 2.5.

(viii) The calculations are easily performed in any spreadsheet with normal probability functions. The calculations are illustrated in Tables 6 and 7 in paragraph (m)(2)(iv) of this guideline, which is structured to promote spreadsheet implementation. The computation steps are illustrated using an example where the upper limit dose is 5000 mg/kg.

(A) Hypothetical example (Tables 6 and 7 in paragraph (m)(2)(iv) of this guideline). In the hypothetical example utilizing an upper boundary dose of 5000 mg/kg, the LR stopping criterion was met after nine animals had been tested. The first "reversal" occurred with the 3rd animal tested. The LR stopping criterion is checked when four animals have been tested following the reversal. In this example, the fourth animal tested following the reversal is the seventh animal actually tested. Therefore, for this example, the spreadsheet calculations are only needed after the seventh animal had been tested and the data could be entered at that time. Subsequently, the LR stopping criterion would have been checked after testing the seventh animal, the eighth animal, and the ninth. The LR stopping criterion is first satisfied after the ninth animal is tested in this example.

(*1*) Enter the dose-response information animal by animal.

(*i*) Column 1. Steps are numbered 1–15. No more than 15 animals may be tested.

(*ii*) Column 2. Place an I in this column as each animal is tested.

(*iii*) Column 3. Enter the dose received by the $i^{th}$ animal.

(*iv*) Column 4. Indicate whether the animal responded (shown by an X) or did not respond (shown by an O).

(*2*) The nominal and actual sample sizes. The nominal sample consists of the two animals that represent the first reversal (here the second and third animals), plus all animals tested subsequently. Here, Column 5 indicates whether or not a given animal is included in the nominal sample.

(*i*) The nominal sample size (nominal $n$) appears in Row 16. This is the number of animals in the nominal sample. In the example, nominal $n$ is 8.

(*ii*) The actual number tested appears in Row 17.

(*3*) Rough estimate of the $LD_{50}$. The geometric mean of doses for the animals in the current nominal sample is used as a rough estimate of the $LD_{50}$ from which to gauge progress. In the table, this is called the ''dose-averaging estimator.'' It is updated with each animal tested. This average is restricted to the nominal sample in order to allow for a poor choice of initial test dose, which could generate either an initial string of responses or an initial string of nonresponses. (However, the results for all animals are used in the likelihood calculations for final $LD_{50}$ calculation below.) Recall that the geometric mean of $n$ numbers is the product of the $n$ numbers, raised to a power of $1/n$.

(*i*) The dose-averaging estimate appears in Row 18 (e.g., $(175 * 550 * \ldots * 1750)^{1/8} = 1292.78$).

(*ii*) Row 19 shows the logarithm (base 10) of the value in Row 18 (e.g., $\log_{10} 1292.8 = 3.112$).

(*4*) Likelihood for the rough $LD_{50}$ estimate.

(*i*) ''Likelihood'' is a statistical measure of how strongly the data support an estimate of the $LD_{50}$ or other parameter. Ratios of likelihood values can be used to compare how well the data support different estimates of the $LD_{50}$.

(*ii*) In Column 8 calculate the likelihood for Step C's rough $LD_{50}$ estimate. The likelihood (Row 21) is the product of likelihood contributions for individual animals (see paragraph (k)(2) of this guideline). The likelihood contribution for the $i^{th}$ animal is denoted $L_i$.

(*iii*) Column 7. Enter the estimate of the probability of response at dose $d_i$, denoted $P_i$. $P_i$ is calculated from a dose-response curve. Note that the parameters of a probit dose-response curve are the slope and the $LD_{50}$, so values are needed for each of those parameters. For the $LD_{50}$ the dose-averaging estimate from Row 18 is used. For the slope in this example the default value of 2 is used. The following steps may be used to calculate the response probability $P_i$.

1. Calculate the base-10 log of dose $d_i$ (Column 6).

2. For each animal calculate the z-score, denoted $Z_i$ (not shown in the table), using the formulae

$sigma = 1 / slope,$

$Z_i = (\log_{10}(d_i) - \log_{10}(LD_{50})) / sigma$

For example, for the first animal (Row 1),

$sigma = 1 / 2$

$Z_1 = (2.243 - 3.112) / 0.500 = -1.738$

3. For the $i^{th}$ dose the estimated response probability is

$P_i = F(Z_i)$

where $F$ denotes the cumulative distribution function for the standard normal distribution (i.e., the normal distribution with mean 0 and variance 1).

For example (Row 1),

$P_1 = F(-1.738) = 0.0412$

The function $F$ (or something very close) is ordinarily what is given for the normal distribution in statistical tables, but the function is also widely available as a spreadsheet function. It is available under different names, for example the @NORMAL function of Lotus 1-2-3 (see paragraph (n)(19) of this guideline) and the @NORMDIST function in Excel (see paragraph (n)(20) of this guideline). To confirm that you have used correctly the function available in your software, you may wish to verify familiar values such as $F(1.96) \approx 0.975$ or $F(1.64) \approx 0.95$.

(*iv*) Column 8. Calculate the natural log of the likelihood contribution ($\ln(L_i)$). $L_i$ is simply the probability of the response that actually was observed for the $i^{th}$ animal:

Responding animals: $\ln(L_i) = \ln(P_i)$

Non-responding animals: $\ln(L_i) = \ln(1 - P_i)$

Note that here the natural logarithm (ln) is used, whereas elsewhere the base-10 (common) logarithm was used. These choices are what are ordinarily expected in a given context.

The steps above are performed for each animal. Finally:

Row 20: Sum the log-likelihood contributions in Column 8.

Row 21: Calculate the likelihood by applying the exp function applied to the log-likelihood value in Row 20 (e.g., exp(-3.389) = $e^{-3.389}$ = 0.0337).

(*5*) Calculate likelihoods for two dose values above and below the rough estimate. If the data permit a precise estimate, then one expects the likelihood should be high if the estimate is a reasonable estimate of the $LD_{50}$, relative to likelihoods for values distant from this estimate. Compare the likelihood for the dose-averaging estimate (1292.8, Row 18) to values differing by a factor of 2.5 from that value (i.e., to 1292.8*2.5 and 1292.8/2.5). The calculations (displayed in Columns 9–12) are carried out in a fashion similar to those described above, except that the values 517.1 (=1292.8/2.5) and 3232.0 (=1292.8*2.5) have been used for the $LD_{50}$, instead of 1292.8. The likelihoods and log-likelihoods are displayed in Rows 20–21.

(*6*) Calculate likelihood-ratios. The three likelihood values (Row 21) are used to calculate two likelihood-ratios (Row 22). A likelihood-ratio is used to compare the statistical support for the estimate of 1292.8 to the support for each of the other values, 517.1 and 3232.0. The two likelihood-ratios are therefore:

LR1 = [likelihood of 1292.8] / [likelihood of 517.1]

= 0.0337 / 0.0080

= 4.21

and

LR2 = [likelihood of 1292.8] / [likelihood of 3232.0]

= 0.0337 / 0.0098

= 3.44

(*7*) Determine if the likelihood-ratios exceed the critical value. High likelihood-ratios are taken to indicate relatively high support for the point estimate of the $LD_{50}$. Both of the likelihood-ratios calculated in paragraph (m)(2)(viii)(A)(*6*) of this guideline (4.21 and 3.44) exceed the critical likelihood-ratio, which is 2.5. Therefore the LR stopping criterion is satisfied and testing stops. This is indicated by a TRUE in Row 24 and a note at the top of the example spreadsheet that the LR criterion is met. Determination of the point estimate and CI is carried out separately.

(B) [Reserved]

(3) **Performance of the UDP**. This section addresses choice of dose progression and initial dose level for the UDP and describes the performance of the test under a variety of circumstances. A companion document titled ''Toxicology Summary: Performance of the Up-and-Down Procedure'' provides assistance to the user in interpretation of the test results and is available on the ICCVAM web site at http://iccvam.niehs.nih.gov/methods/udpdocs/udprpt/udp_ciprop.htm. The statistical methods applied will depend upon the case into which the test response patterns fall (see Table 8 in paragraph (m)(3)(iii) of this guideline.

(i) Adjusting the dose progression and initial dose. For optimum performance of the UDP, the dose progression used should be based on an accurate prior estimate of *sigma*. The following two cases describe the outcome when an accurate estimate of *sigma* is not available. In addition, to account conservatively for any bias in the $LD_{50}$ estimate, it is essential that dosing be initiated below the actual $LD_{50}$.

(A) Assumed *sigma* << true *sigma*: When the assumed *sigma* (i.e., the *sigma* on which the dose progression is based) is much smaller than the true *sigma* of the actual test population, the estimated $LD_{50}$ may be ''biased'' in the direction of starting dose. For example, if the starting dose is less than the true $LD_{50}$ of the test population, the estimated $LD_{50}$ will generally be below the true $LD_{50}$. Also, if the starting dose is greater than the true $LD_{50}$ of the test population, the estimated $LD_{50}$ will tend to be greater than the true $LD_{50}$. To minimize the chance of overestimating the $LD_{50}$ due to this bias, the UDP guideline recommends a choice of starting dose just below the assumed $LD_{50}$.

(B) Assumed *sigma* >> true *sigma*: If the assumed sigma on which the dose progression is based is much larger than the true *sigma* of the test population, the median estimated $LD_{50}$ can be much larger or much smaller than the true $LD_{50}$ depending on the starting dose. In this case, the $LD_{50}$ can be estimated only within a range. (This is Case 3 described below.)

(ii) CI. Coverage of the CI is the probability that a calculated CI encloses the true $LD_{50}$ for an experimental sample. Because the profile likelihood method is approximate, coverage of the CI does not always correspond to its nominal value. For example, coverage falls below 95% for populations with shallow slopes and is better than 95% for populations with steep slopes. In addition, the width of the CI is limited by the dose progression chosen. Generally, no type of CI would be more narrow than the dose progression.

(iii) Response Patterns. Data gathered under the UDP fall into one of five animal response patterns. The five types of animal response patterns, referred to as Case 1 through Case 5 in the following Table 8, can

be distinguished for the purpose of describing the performance of the UDP. These cases can be distinguished by looking at the experimental outcome (survival or death) as reflected in the AOT425StatPgm Data Grid or Report windows (see paragraph (n)(18) of this guideline). In considering these cases, note that doses can be repeated more than once in the course of sequential dosing.

Table 8.—Outcomes of the UDP: Cases and Confidence Intervals

| Case # | Definition of Case | Approach Proposed | Possible Findings |
|---|---|---|---|
| 1 | No positive dose-response association. (1a) All animals tested in the study responded, or (1b) none responded, or (1c) the geometric mean dose is lower for animals that responded than for animals that did not respond. | $LD_{50}$ cannot be calculated. CI not applicable. | Possible inferences: (1a) $LD_{50}$ < lowest dose; (1b) $LD_{50}$ > highest dose; (1c) reverse dose-response curve; unlikely test outcome. In case 1b, the highest dose tested is equivalent to a limit dose. |
| 2 | Multiple partial responses. One or more animals responded at a dose below some other dose where one or more did not respond. The conditions defining Case 1 do not hold. (The definition of Case 2 holds if there are 2 doses with partial responses, but holds in some other cases as well.) | Maximum likelihood estimate and profile likelihood computations of CI are straightforward. | The $LD_{50}$ can be estimated and its CI calculated. |
| 3 | No intermediate response fractions. One or more test doses is associated with 0% response and one or more is associated with 100% response (all of the latter being greater than all of the former), and no test doses are associated with a partial response. | Lower bound = highest test dose with 0% response. Upper bound = lowest test dose with 100% response. | High confidence that the true $LD_{50}$ falls between the two bounding doses. Any value of $LD_{50}$ between highest dose with 0% response and lowest dose with 100% response is equally plausible. |
| 4 | One partial response fraction, first subcase. An intermediate partial response is observed at a single test dose. That dose is greater than doses associated with 0% response and lower than doses associated with 100% response. | The $LD_{50}$ is set at the single dose showing partial response and its CI is calculated using profile likelihood method. | The $LD_{50}$ can be estimated and its CI calculated. |
| 5 | One partial response fraction, second subcase. There is a single dose associated with partial response, which is either the highest test dose (with no responses at all other test doses) or the lowest test dose (with 100% response at all other test doses). | The $LD_{50}$ is set at the dose with the partial response. A profile likelihood CI is calculated and may be finite or infinite. | The true $LD_{50}$ could be at the boundary of the testing range with more or less confidence. |

(n) References. The following references should be consulted for additional background material on this test guideline.

(1) Organization for Economic Cooperation and Development. OECD Guidelines for the Testing of Chemicals. Guideline 425: Acute Oral Toxicity—Up-and-Down Procedure. Adopted: December 2001.

(2) Organization for Economic Cooperation and Development. OECD Guidelines for the Testing of Chemicals. Guideline 420: Acute Oral Toxicity—Fixed Dose Method. Adopted: December 2001.

(3) Organization for Economic Cooperation and Development. OECD Guidelines for the Testing of Chemicals. Guideline 423: Acute Oral Toxcity—Acute Toxic Class Method. Adopted: December 2001.

(4) Dixon, W.J. and A.M. Mood. (1948). A Method for Obtaining and Analyzing Sensitivity Data. J. Amer. Statist. Assoc., 43, 109–126.

(5) Dixon, W.J. (1965). The Up-and-Down Method for Small Samples. J. Amer. Statist. Assoc. 60, 967–978.

(6) Dixon, W.J. (1991). Staircase Bioassay: The Up-and-Down Method. Neurosci. Biobehav. Rev., 15, 47–50.

(7) Dixon, W.J. (1991). Design and Analysis of Quantal Dose-Response Experiments (with Emphasis on Staircase Designs). Dixon Statistical Associates, Los Angeles CA, USA.

(8) Bruce, R.D. (1985). An Up-and-Down Procedure for Acute Toxicity Testing. Fundam. Appl. Tox., 5, 151–157.

(9) ASTM (1987). E 1163–87, Standard Test Method for Estimating Acute Oral Toxicity in Rats. American Society for Testing and Materials, Philadelphia Pa, USA.

(10) Lipnick, R.L., J.A. Cotruvo, R.N. Hill, R.D. Bruce, K.A. Stitzel, A.P. Walker, I. Chu, M. Goddard, L. Segal, J.A. Springer, and R.C. Myers. (1995). Comparison of the Up-and-Down, Conventional $LD_{50}$ and Fixed Dose Acute Toxicity Procedures. Fd. Chem. Toxicol., 33, 223–231.

(11) Organization for Economic Cooperation and Development. (2000). Guidance Document on the Recognition, Assessment and Use of Clinical Signs as Humane Endpoints for Experimental Animals Used in Safety Evaluation. Environmental Health and Safety Monograph Series on Testing and Assessment No. 19.

(12) Report of the International Workshop on *In Vitro* Methods for Assessing Acute Systemic Toxicity. NIH Publication No. 01-4499. Research Triangle Park, NC: National Institute of Environmental Health Sciences, August 2001.

(13) Guidance Document on Using *In Vitro* Data to Estimate *In Vivo* Starting Doses for Acute Toxicity. NIH Publication No. 01-4500. Research Triangle Park, NC: National Institute of Environmental Health Sciences, August 2001.

(14) Spielmann, H.E., M.Genschow, M. Leibsch, and W. Halle. (1999). Determination of the Starting Dose for Acute Oral Toxicity ($LD_{50}$) Testing in the Up-and-Down Procedure (UDP) from Cytotoxicity Data ATLA 27: 957–966.

(15) Chan, P.K. and A.W. Hayes. (1994). Chap. 16. Acute Toxicity and Eye Irritancy. *Principles and Methods of Toxicology*. Third Edition. A.W. Hayes, Editor. Raven Press, Ltd., New York, USA.

(16) Westat. (2001). Acute Oral Toxicity Software Program; AOT 425StatPgm; AOT425StatPgm Program User's Manual; and Simulation Results for the AOT425StatPgm Program. Reports prepared for U.S.

E.P.A. under Contract 68–W7–0025, Task Order 5-03. Currently available at web site: http://iccvam.niehs.nih.gov/methods/udpdocs/udprpt/udp_ciprop.htm

(17) Rosenberger, W.F., Flournoy, N. and Durham, S.D. (1997). Asymptotic Normality of Maximum Likelihood Estimators from Multiparameter Response-driven Designs. Journal of Statistical Planning and Inference 60, 69–76.

(18) Jennison, C. and B.W. Turnbull. (2000). *Group Sequential Methods with Applications to Clinical Trials*. Chapman & Hall/CRC: Boca Raton, FL.

(19) Lotus Development Corporation. (1999). Lotus® 1-2-3. Version 9.5, Millennium edition. Cambridge, MA, USA.

(20) Microsoft Corporation. (1985–1997). Microsoft® Excel. Version 5.0 or later. Seattle, WA, USA.

***[This Page Intentionally Left Blank]***

# Appendix M3

## OECD ATC Method Test Guideline

***[This Page Intentionally Left Blank]***

**OECD/OCDE** **423**

Adopted:
17th December 2001

# OECD GUIDELINE FOR TESTING OF CHEMICALS

## Acute Oral Toxicity – Acute Toxic Class Method

## INTRODUCTION

1. OECD Guidelines for the Testing of Chemicals are periodically reviewed in the light of scientific progress or changing assessment practices. The original Guideline 423 was adopted in March 1996 as the second alternative to the conventional acute toxicity test, described in Test Guideline 401. Based on the recommendations of several expert meetings, revision was considered timely because: i) international agreement has been reached on harmonised LD50 cut-off values for the classification of chemical substances, which differ from the cut-offs recommended in the 1996 version of the Guideline, and ii) testing in one sex (usually females) is now considered sufficient.

2. The acute toxic class method (1) set out in this Guideline is a stepwise procedure with the use of 3 animals of a single sex per step. Depending on the mortality and/or the moribund status of the animals, on average 2-4 steps may be necessary to allow judgement on the acute toxicity of the test substance. This procedure is reproducible, uses very few animals and is able to rank substances in a similar manner to the other acute toxicity testing methods (Test Guidelines 420 and 425). The acute toxic class method is based on biometric evaluations (2)(3)(4)(5) with fixed doses, adequately separated to enable a substance to be ranked for classification purposes and hazard assessment. The method as adopted in 1996 was extensively validated *in vivo* against LD50 data obtained from the literature, both nationally (6) and internationally (7).

3. Guidance on the selection of the most appropriate test method for a given purpose can be found in the Guidance Document on Acute Oral Toxicity Testing (8). This Guidance Document also contains additional information on the conduct and interpretation of Test Guideline 423.

4. Definitions used in the context of this Guideline are set out in Annex 1.

## INITIAL CONSIDERATIONS

5. Test substances, at doses that are known to cause marked pain and distress due to corrosive or severely irritant actions, need not be administered. Moribund animals, or animals obviously in pain or showing signs of severe and enduring distress shall be humanely killed, and are considered in the interpretation of the test results in the same way as animals that died on test. Criteria for making the decision to kill moribund or severely suffering animals, and guidance on the recognition of predictable or impending death, are the subject of a separate Guidance Document (9).

6. The method uses pre-defined doses and the results allow a substance to be ranked and classified according to the Globally Harmonised System for the classification of chemicals which cause acute toxicity (10).

7. In principle, the method is not intended to allow the calculation of a precise $LD_{50}$, but does allow for the determination of defined exposure ranges where lethality is expected since death of a proportion of the animals is still the major endpoint of this test. The method allows for the determination of an LD50 value only when at least two doses result in mortality higher than 0% and lower than 100%. The use of a selection of pre-defined doses, regardless of test substance, with classification explicitly tied to number of animals observed in different states improves the opportunity for laboratory to laboratory reporting consistency and repeatability.

8. The testing laboratory should consider all available information on the test substance prior to conducting the study. Such information will include the identity and chemical structure of the substance; its physico-chemical properties; the result of any other *in vivo* or *in vitro* toxicity tests on the substance; toxicological data on the structurally related substances; and the anticipated use(s) of the substance. This information is necessary to satisfy all concerned that the test is relevant for the protection of human health and will help in the selection of the most appropriate starting dose.

## PRINCIPLE OF THE TEST

9. It is the principle of the test that, based on a stepwise procedure with the use of a minimum number of animals per step, sufficient information is obtained on the acute toxicity of the test substance to enable its classification. The substance is administered orally to a group of experimental animals at one of the defined doses. The substance is tested using a stepwise procedure, each step using three animals of a single sex (normally females). Absence or presence of compound-related mortality of the animals dosed at one step will determine the next step, i.e.;

- no further testing is needed,
- dosing of three additional animals, with the same dose
- dosing of three additional animals at the next higher or the next lower dose level.

10. Details of the test procedure are described in Annex 2. The method will enable a judgement with respect to classifying the test substance to one of a series of toxicity classes defined by fixed LD50 cut-off values.

## DESCRIPTION OF THE METHOD

### Selection of animal species

11. The preferred rodent species is the rat, although other rodent species may be used. Normally females are used (9). This is because literature surveys of conventional LD50 tests show that, although there is little difference in sensitivity between the sexes, in those cases where differences are observed females are generally slightly more sensitive (11). However if knowledge of the toxicological or toxicokinetic properties of structurally related chemicals indicates that males are likely to be more sensitive, then this sex should be used. When the test is conducted in males adequate justification should be provided.

12. Healthy young adult animals of commonly used laboratory strains should be employed. Females should be nulliparous and non-pregnant. Each animal, at the commencement of its dosing, should be between 8 and 12 weeks old and its weight should fall in an interval within $\pm$ 20 % of the mean weight of any previously dosed animals.

**Housing and feeding conditions**

13. The temperature in the experimental animal room should be 22°C (± 3°C). Although the relative humidity should be at least 30% and preferably not exceed 70% other than during room cleaning the aim should be 50-60%. Lighting should be artificial, the sequence being 12 hours light, 12 hours dark. For feeding, conventional laboratory diets may be used with an unlimited supply of drinking water. Animals may be group-caged by dose, but the number of animals per cage must not interfere with clear observations of each animal.

**Preparation of animals**

14. The animals are randomly selected, marked to permit individual identification, and kept in their cages for at least 5 days prior to dosing to allow for acclimatisation to the laboratory conditions.

**Preparation of doses**

15. In general test substances should be administered in a constant volume over the range of doses to be tested by varying the concentration of the dosing preparation. Where a liquid end product or mixture is to be tested however, the use of the undiluted test substance, ie at a constant concentration, may be more relevant to the subsequent risk assessment of that substance, and is a requirement of some regulatory authorities. In either case, the maximum dose volume for administration must not be exceeded. The maximum volume of liquid that can be administered at one time depends on the size of the test animal. In rodents, the volume should not normally exceed 1mL/100g of body weight: however in the case of aqueous solutions 2 mL/100g body weight can be considered. With respect to the formulation of the dosing preparation, the use of an aqueous solution/suspension/emulsion is recommended wherever possible, followed in order of preference by a solution/suspension/emulsion in oil (e.g. corn oil) and then possibly solution in other vehicles. For vehicles other than water the toxicological characteristics of the vehicle should be known. Doses must be prepared shortly prior to administration unless the stability of the preparation over the period during which it will be used is known and shown to be acceptable.

**PROCEDURE**

**Administration of doses.**

16. The test substance is administered in a single dose by gavage using a stomach tube or a suitable intubation canula. In the unusual circumstance that a single dose is not possible, the dose may be given in smaller fractions over a period not exceeding 24 hours.

17. Animals should be fasted prior to dosing (e.g. with the rat, food but not water should be withheld over-night, with the mouse, food but not water should be withheld for 3-4 hours). Following the period of fasting, the animals should be weighed and the test substance administered. After the substance has been administered, food may be withheld for a further 3-4 hours in rats or 1-2 hours in mice. Where a dose is administered in fractions over a period it may be necessary to provide the animals with food and water depending on the length of the period.

**Number of animals and dose levels**

18. Three animals are used for each step. The dose level to be used as the starting dose is selected from one of four fixed levels, 5, 50, 300 and 2000 mg/kg body weight. The starting dose level should be that which is most likely to produce mortality in some of the dosed animals. The flow charts of Annex 2 describe the procedure that should be followed for each of the starting doses.

19. When available information suggests that mortality is unlikely at the highest starting dose level (2000 mg/kg body weight), then a limit test should be conducted. When there is no information on a substance to be tested, for animal welfare reasons it is recommended to use the starting dose of 300 mg/kg body weight.

20 The time interval between treatment groups is determined by the onset, duration, and severity of toxic signs. Treatment of animals at the next dose, should be delayed until one is confident of survival of the previously dosed animals.

21. Exceptionally, and only when justified by specific regulatory needs, the use of additional upper dose level of 5000 mg/kg body weight may be considered (see Annex 3). For reasons of animal welfare concern, testing of animals in GHS Category 5 ranges (2000-5000mg/kg) is discouraged and should only be considered when there is a strong likelihood that results of such a test have a direct relevance for protecting human or animal health or the environment.

**Limit test**

22. The limit test is primarily used in situations where the experimenter has information indicating that the test material is likely to be nontoxic, i.e., having toxicity only above regulatory limit doses. Information about the toxicity of the test material can be gained from knowledge about similar tested compounds or similar tested mixtures or products, taking into consideration the identity and percentage of components known to be of toxicological significance. In those situations where there is little or no information about its toxicity, or in which the the test material is expected to be toxic, the main test should be performed.

23. A limit test at one dose level of 2000 mg/kg body weight may be carried out with six animals (three animals per step). Exceptionally a limit test at one dose level of 5000 mg/kg may be carried out with three animals (see Annex 3). If test substance-related mortality is produced, further testing at the next lower level may need to be carried out.

**OBSERVATIONS**

24. Animals are observed individually after dosing at least once during the first 30 minutes, periodically during the first 24 hours, with special attention given during the first 4 hours, and daily thereafter, for a total of 14 days, except where they need to be removed from the study and humanely killed for animal welfare reasons or are found dead. However, the duration of observation should not be fixed rigidly. It should be determined by the toxic reactions, time of onset and length of recovery period, and may thus be extended when considered necessary. The times at which signs of toxicity appear and disappear are important, especially if there is a tendency for toxic signs to be delayed (12). All observations are systematically recorded with individual records being maintained for each animal.

25. Additional observations will be necessary if the animals continue to display signs of toxicity. Observations should include changes in skin and fur, eyes and mucous membranes, and also respiratory, circulatory, autonomic and central nervous systems, and somatomotor activity and behaviour pattern. Attention should be directed to observations of tremors, convulsions, salivation, diarrhoea, lethargy, sleep

and coma. The principles and criteria summarised in the Humane Endpoints Guidance Document (9) should be taken into consideration. Animals found in a moribund condition and animals showing severe pain or enduring signs of severe distress should be humanely killed. When animals are killed for humane reasons or found dead, the time of death should be recorded as precisely as possible.

**Body weight**

26. Individual weights of animals should be determined shortly before the test substance is administered, and at least weekly thereafter. Weight changes should be calculated and recorded. At the end of the test surviving animals are weighed and humanely killed.

**Pathology**

27. All test animals (including those that die during the test or are removed from the study for animal welfare reasons) should be subjected to gross necropsy. All gross pathological changes should be recorded for each animal. Microscopic examination of organs showing evidence of gross pathology in animals surviving 24 or more hours may also be considered because it may yield useful information.

## DATA AND REPORTING

**Data**

28. Individual animal data should be provided. Additionally, all data should be summarised in tabular form, showing for each test group the number of animals used, the number of animals displaying signs of toxicity, the number of animals found dead during the test or killed for humane reasons, time of death of individual animals, a description and the time course of toxic effects and reversibility, and necropsy findings.

**Test report**

29. The test report must include the following information, as appropriate:

Test substance:

- physical nature, purity, and, where relevant, physico-chemical properties (including isomerisation);
- identification data, including CAS number.

Vehicle (if appropriate):

- justification for choice of vehicle, if other than water.

Test animals:

- species/strain used;
- microbiological status of the animals, when known;
- number, age, and sex of animals (including, where appropriate, a rationale for the use of males instead of females);
- source, housing conditions, diet etc.

Test conditions:

- details of test substance formulation including details of the physical form of the

material administered;
- details of the administration of the test substance including dosing volumes and time of dosing;
- details of food and water quality (including diet type/source, water source);
- the rationale for the selection of the starting dose.

Results:

- tabulation of response data and dose level for each animal (i.e. animals showing signs of toxicity including mortality; nature, severity, and duration of effects);
- tabulation of body weight and body weight changes;
- individual weights of animals at the day of dosing, in weekly intervals thereafter, and at the time of death or sacrifice;
- date and time of death if prior to scheduled sacrifice;
- time course of onset of signs of toxicity, and whether these were reversible for each animal;
- necropsy findings and histopathological findings for each animal, if available.

Discussion and interpretation of results.

Conclusions.

## LITERATURE

(1) Roll R., Höfer-Bosse Th. And Kayser D. (1986). New Perspectives in Acute Toxicity Testing of Chemicals. Toxicol. Lett., Suppl. 31, 86.

(2) Roll R., Riebschläger M., Mischke U. and Kayser D. (1989). Neue Wege zur Bestimmung der akuten Toxizität von Chemikalien. Bundesgesundheitsblatt 32, 336-341.

(3) Diener W., Sichha L., Mischke U., Kayser D. and Schlede E. (1994). The Biometric Evaluation of the Acute-Toxic-Class Method (Oral). Arch. Toxicol. 68, 559-610.

(4) Diener W., Mischke U., Kayser D. and Schlede E. (1995). The Biometric Evaluation of the OECD Modified Version of the Acute-Toxic-Class Method (Oral). Arch. Toxicol. 69, 729-734.

(5) Diener W., and Schlede E. (1999) Acute Toxicity Class Methods: Alternatives to LD/LC50 Tests. ALTEX 16, 129-134.

(6) Schlede E., Mischke U., Roll R. and Kayser D. (1992). A National Validation Study of the Acute-Toxic-Class Method – An Alternative to the LD50 Test. Arch. Toxicol. 66, 455-470.

(7) Schlede E., Mischke U., Diener W. and Kayser D. (1994). The International Validation Study of the Acute-Toxic-Class Method (Oral). Arch. Toxicol. 69, 659-670.

(8) OECD (2000) Guidance Document on Acute Oral Toxicity. Environmental Health and Safety Monograph Series on Testing and Assessment No 24.

(9) OECD (2000) Guidance Document on the Recognition, Assessment and Use of Clinical Signs as Humane Endpoints for Experimental Animals Used in Safety Evaluation Environmental Health and Safety Monograph Series on Testing and Assessment No 19.

(10) OECD (1998) Harmonized Integrated Hazard Classification System For Human Health And Environmental Effects Of Chemical Substances as endorsed by the 28th Joint Meeting of the

Chemicals Committee and the Working Party on Chemicals in November 1998, Part 2, p. 11 [http://webnet1.oecd.org/oecd/pages/home/displaygeneral/0,3380,EN-documents-521-14-no-24-no-0,FF.html].

(11) Lipnick R L, Cotruvo, J A, Hill R N, Bruce R D, Stitzel K A, Walker A P, Chu I; Goddard M, Segal L, Springer J A and Myers R C (1995) Comparison of the Up-and Down, Conventional $LD_{50}$, and Fixed Dose Acute Toxicity Procedures. Fd. Chem. Toxicol 33, 223-231.

(12) Chan P.K. and A.W. Hayes. (1994 ). Chap. 16. Acute Toxicity and Eye Irritancy. *Principles and Methods of Toxicology*. Third Edition. A.W. Hayes, Editor. Raven Press, Ltd., New York, USA.

**423** **OECD/OCDE**

**ANNEX 1**

**DEFINITIONS**

Acute oral toxicity refers to those adverse effects occurring following oral administration of a single dose of a substance, or multiple doses given within 24 hours.

Delayed death means that an animal does not die or appear moribund within 48 hours but dies later during the 14-day observation period.

Dose is the amount of test substance administered. Dose is expressed as weight of test substance per unit weight of test animal (e.g. mg/kg).

GHS: Globally Harmonised Classification System for Chemical Substances and Mixtures. A joint activity of OECD (human health and the environment), UN Committee of Experts on Transport of Dangerous Goods (physical–chemical properties) and ILO (hazard communication) and co-ordinated by the Interorganisation Programme for the Sound Management of Chemicals (IOMC).

Impending death: when moribund state or death is expected prior to the next planned time of observation. Signs indicative of this state in rodents could include convulsions, lateral position, recumbence, and tremor (See the Humane Endpoint Guidance Document (9) for more details).

LD50 (median lethal oral dose) is a statistically derived single dose of a substance that can be expected to cause death in 50 per cent of animals when administered by the oral route. The LD50 value is expressed in terms of weight of test substance per unit weight of test animal (mg/kg).

Limit dose refers to a dose at an upper limitation on testing (2000 or 5000 mg/kg).

Moribund status: being in a state of dying or inability to survive, even if treated (See the Humane Endpoint Guidance Document (9) for more details).

Predictable death: presence of clinical signs indicative of death at a known time in the future before the planned end of the experimen ; for example: inability to reach water or food. (See the Humane Endpoint Guidance Document (9) for more details).

**OECD/OCDE** **423**

## ANNEX 2

## PROCEDURE TO BE FOLLOWED FOR EACH OF THE STARTING DOSES

### GENERAL REMARKS

1. For each starting dose, the respective testing schemes as included in this Annex outline the procedure to be followed.

- Annex 2 a: Starting dose is 5 mg/kg bw
- Annex 2 b: Starting dose is 50 mg/kg bw
- Annex 2 c: Starting dose is: 300 mg/kg bw
- Annex 2 d: Starting dose is: 2000 mg/kg bw

Depending on the number of humanely killed or dead animals, the test procedure follows the indicated arrows.

**423**

**OECD/OCDE**

**ANNEX 2a: TEST PROCEDURE WITH A STARTING DOSE OF 5 MG/KG BODY WEIGHT**

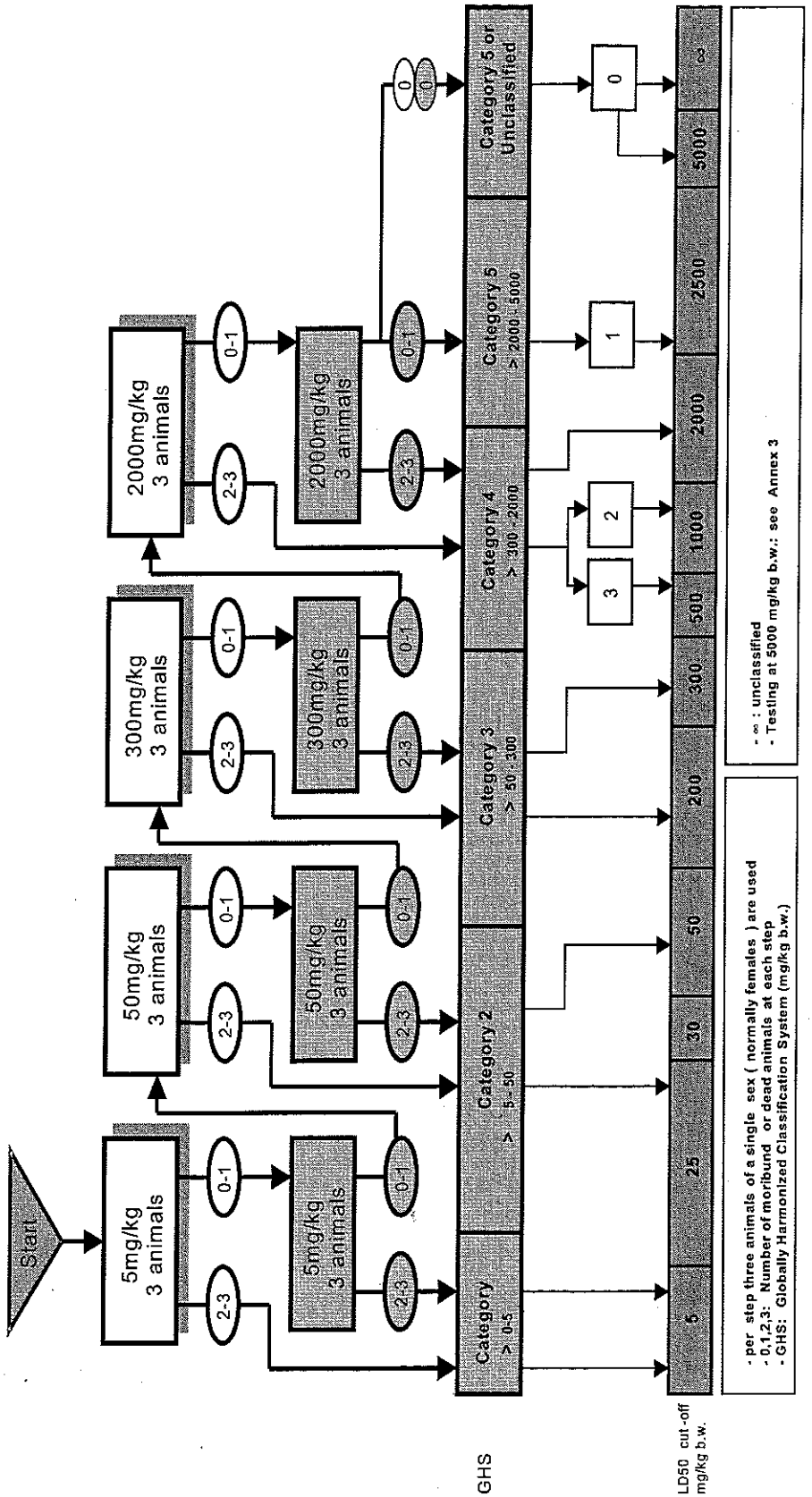


10/14

**ANNEX 2b: TEST PROCEDURE WITH A STARTING DOSE OF 50 MG/KG BODY WEIGHT**

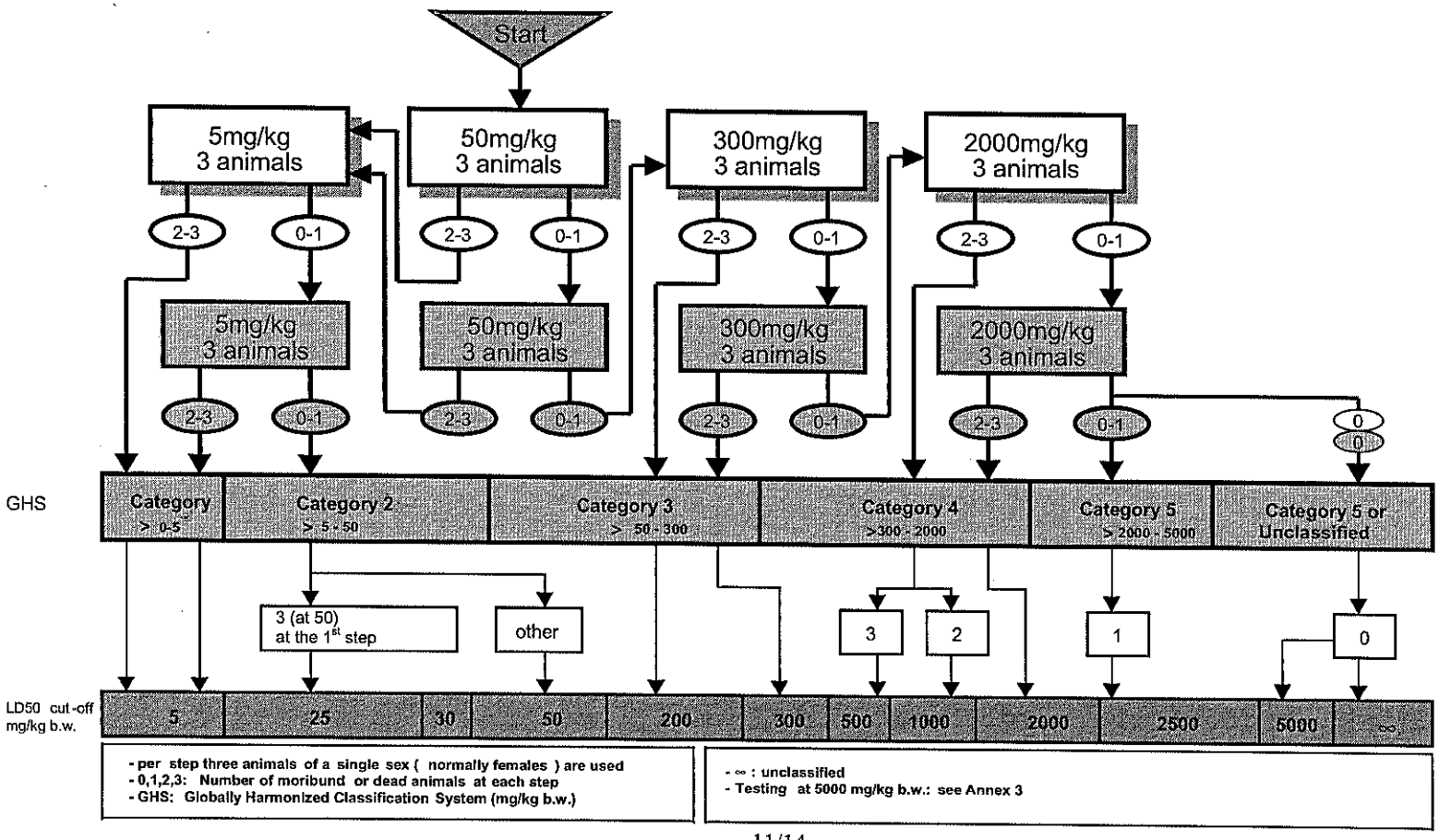

**ANNEX 2c: TEST PROCEDURE WITH A STARTING DOSE OF 300 MG/KG BODY WEIGHT**

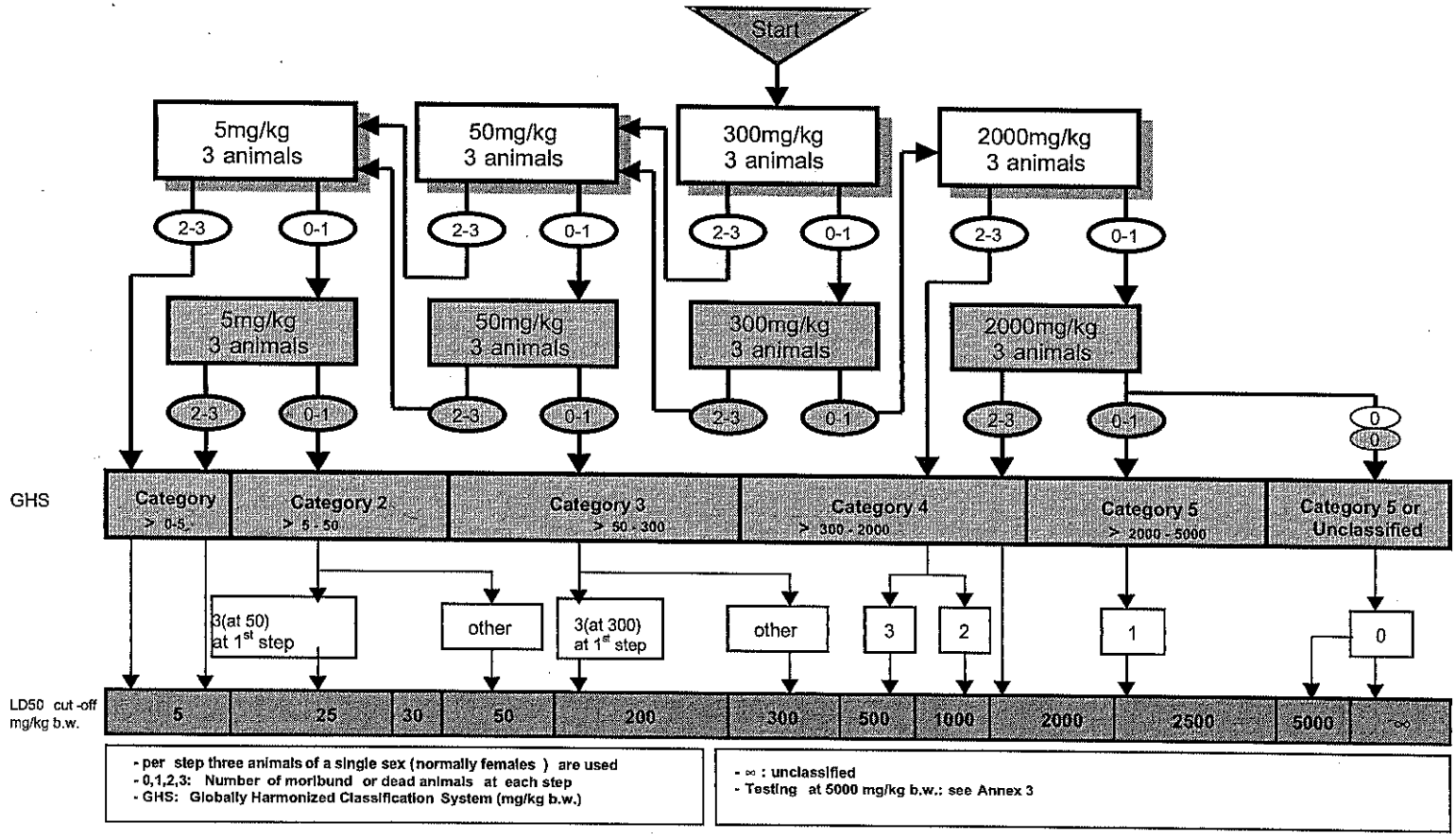

**OECD/OCDE** **423**

**ANNEX 2d: TEST PROCEDURE WITH A STARTING DOSE OF 2000 MG/KG BODY WEIGHT**

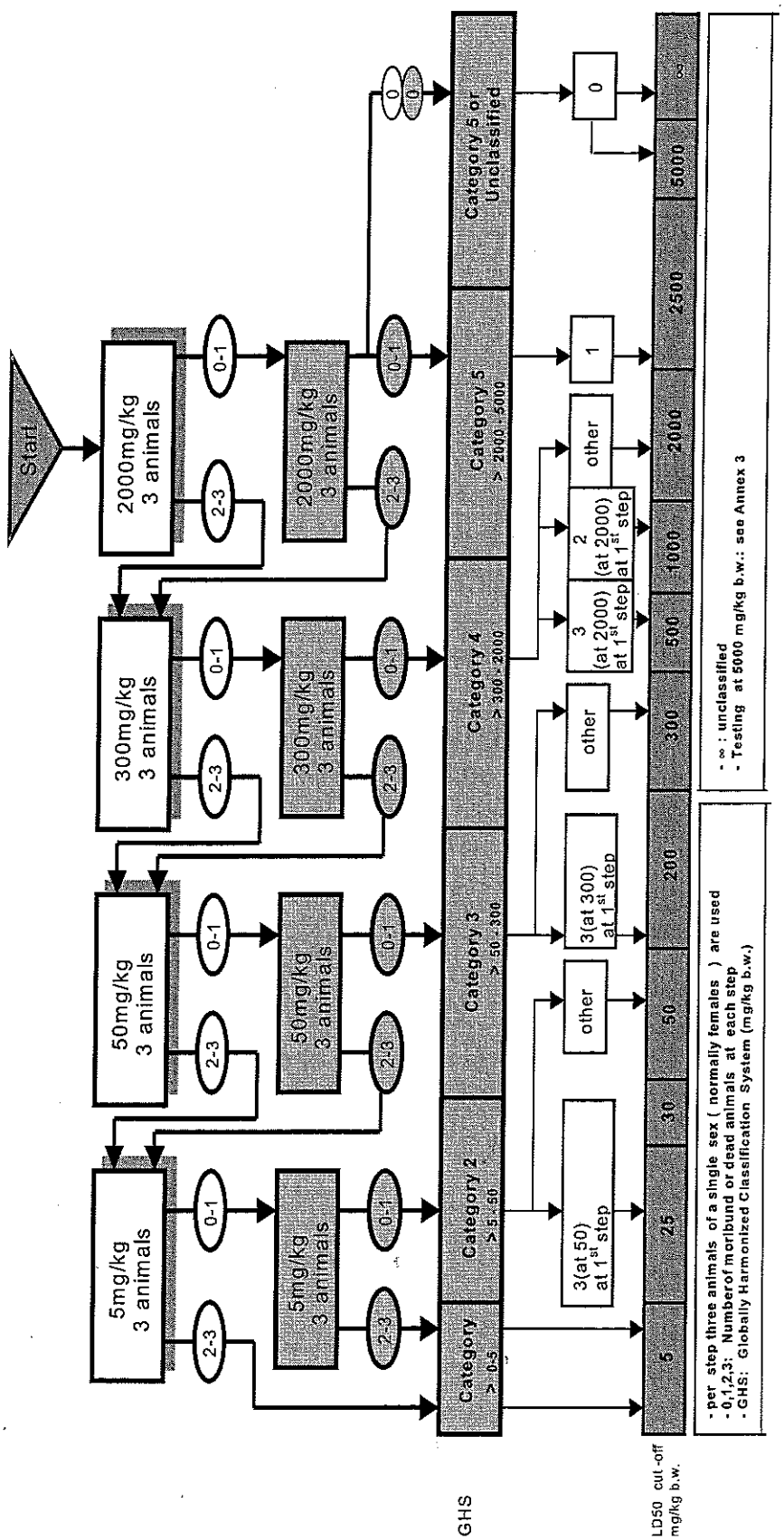


13/14

**423** **OECD/OCDE**

**ANNEX 3**

**CRITERIA FOR CLASSIFICATION OF TEST SUBSTANCES WITH EXPECTED LD50 VALUES EXCEEDING 2000 MG/KG WITHOUT THE NEED FOR TESTING**

1. Criteria for hazard Category 5 are intended to enable the identification of test substances which are of relatively low acute toxicity hazard but which, under certain circumstances may present a danger to vulnerable populations. These substances are anticipated to have an oral or dermal LD50 in the range of 2000-5000 mg/kg or equivalent doses for other routes. The test substance should be classified in the hazard category defined by: 2000mg/kg<LD50<5000mg/kg (Category 5 in the GHS) in the following cases:

a) If directed to this category by any of the testing schemes of Annex 2a-2d, based on mortality incidences;

b) if reliable evidence is already available that indicates the LD50 to be in the range of Category 5 values, or other animal studies or toxic effects in humans indicate a concern for human health of an acute nature.

c) Through extrapolation, estimation or measurement of data if assignment to a more hazardous category is not warranted, and

- reliable information is available indicating significant toxic effects in humans, or
- any mortality is observed when tested up to Category 4 values by the oral route, or
- where expert judgement confirms significant clinical signs of toxicity, when tested up to Category 4 values, except for diarrhoea, piloerection or an ungroomed appearance, or
- where expert judgement confirms reliable information indicating the potential for significant acute effects from the other animal studies.

**TESTING AT DOSES ABOVE 2000 MG/KG**

2. Recognising the need to protect animal welfare, testing of animals in Category 5 (5000 mg/kg) ranges is discouraged and should only be considered when there is a strong likelihood that results of such a test have a direct relevance for protecting human or animal health (10). No further testing should be conducted at higher dose levels.

3. When testing is required a dose of 5000mg/kg, only one step (i.e. three animals) is required. If the first animal dosed dies , then dosing procedes at 2000mg/kg in accordance with the flow charts in Annex 2. If the first animal survives, two further animals are dosed. If only one of the three animal dies , the LD50 value is expected to exceed 5000mg/kg. If both animals die, then dosing proceeds at 2000mg/kg.

# Appendix M4

## OECD FDP Test Guideline

***[This Page Intentionally Left Blank***

**OECD/OCDE** **420**

Adopted:
17th December 2001

# OECD GUIDELINE FOR TESTING OF CHEMICALS

## Acute Oral Toxicity – Fixed Dose Procedure

## INTRODUCTION

1. OECD Guidelines for the Testing of Chemicals are periodically reviewed in the light of scientific progress or changing assessment practices. The original Guideline 420 was adopted in July 1992 as the first alternative to the conventional acute toxicity test, described in Test Guideline 401. Based on the recommendations of several expert meetings, revision was considered timely because: i) international agreement had been reached on harmonised LD50 cut-off values for the classification of chemical substances, which differ from the cut-offs recommended in the 1992 version of the Guideline, and ii) testing in one sex (usually females) is now considered sufficient.

2. Traditional methods for assessing acute toxicity use death of animals as an endpoint. In 1984, a new approach to acute toxicity testing was suggested by the British Toxicology Society based on the administration at a series of fixed dose levels (1). The approach avoided using death of animals as an endpoint, and relied instead on the observation of clear signs of toxicity at one of a series of fixed dose levels. Following UK (2) and international (3) *in vivo* validation studies the procedure was adopted by the Council as a Test Guideline in 1992. Subsequently, the statistical properties of the Fixed Dose Procedure have been evaluated using mathematical models in a series of studies (4)(5)(6). Together, the *in vivo* and modelling studies have demonstrated that the procedure is reproducible, uses fewer animals and causes less suffering than the traditional methods and is able to rank substances in a similar manner to the other acute toxicity testing methods (Test Guidelines 423 and 425).

3. Guidance on the selection of the most appropriate test method for a given purpose can be found in the Guidance Document on Acute Oral Toxicity Testing (7). This Guidance Document also contains additional information on the conduct and interpretation of Guideline 420.

4. Definitions used in the context of this Guideline are set out in Annex 1.

## INITIAL CONSIDERATIONS

5. It is a principle of the method that in the main study only moderately toxic doses are used, and that administration of doses that are expected to be lethal should be avoided. Also, doses that are known to cause marked pain and distress, due to corrosive or severely irritant actions, need not be administered. Moribund animals, or animals obviously in pain or showing signs of severe and enduring distress shall be humanely killed, and are considered in the interpretation of the test results in the same way as animals that died on test. Criteria for making the decision to kill moribund or severely suffering animals, and guidance on the recognition of predictable or impending death, are the subject of a separate Guidance Document (8).

6. The method provides information on the hazardous properties and allows the substance to be ranked and classified according to the Globally Harmonised System (GHS) for the classification of chemicals which cause acute toxicity (9).

7. The testing laboratory should consider all available information on the test substance prior to conducting the study. Such information will include the identity and chemical structure of the substance; its physico-chemical properties; the results of any other *in vitro* or *in vivo* toxicity tests on the substance; toxicological data on structurally related substances; and the anticipated use(s) of the substance. This information is necessary to satisfy all concerned that the test is relevant for the protection of human health, and will help in the selection of an appropriate starting dose.

## PRINCIPLE OF THE TEST

8. Groups of animals of a single sex are dosed in a stepwise procedure using the fixed doses of 5, 50, 300 and 2000 mg/kg (exceptionally an additional fixed dose of 5000 mg/kg may be considered, see paragraph 19). The initial dose level is selected on the basis of a sighting study as the dose expected to produce some signs of toxicity without causing severe toxic effects or mortality. Clinical signs and conditions associated with pain, suffering, and impending death, are described in detail in a separate OECD Guidance Document (8). Further groups of animals may be dosed at higher or lower fixed doses, depending on the presence or absence of signs of toxicity or mortality. This procedure continues until the dose causing evident toxicity or no more than one death is identified, or when no effects are seen at the highest dose or when deaths occur at the lowest dose.

## DESCRIPTION OF THE METHOD

### Selection of animal species

9. The preferred rodent species is the rat, although other rodent species may be used. Normally females are used (7). This is because literature surveys of conventional LD50 tests show that usually there is little difference in sensitivity between the sexes, but in those cases where differences are observed, females are generally slightly more sensitive (10). However, if knowledge of the toxicological or toxicokinetic properties of structurally related chemicals indicates that males are likely to be more sensitive then this sex should be used. When the test is conducted in males, adequate justification should be provided.

10. Healthy young adult animals of commonly used laboratory strains should be employed. Females should be nulliparous and non-pregnant. Each animal, at the commencement of its dosing, should be between 8 and 12 weeks old and its weight should fall in an interval within ± 20 % of the mean weight of any previously dosed animals.

### Housing and feeding conditions

11. The temperature of the experimental animal room should be 22°C (± 3°C). Although the relative humidity should be at least 30% and preferably not exceed 70% other than during room cleaning the aim should be 50-60%. Lighting should be artificial, the sequence being 12 hours light, 12 hours dark. For feeding, conventional laboratory diets may be used with an unlimited supply of drinking water. Animals may be group-caged by dose, but the number of animals per cage must not interfere with clear observations of each animal.

**Preparation of animals**

12. The animals are randomly selected, marked to permit individual identification, and kept in their cages for at least 5 days prior to the start of dosing to allow for acclimatisation to the laboratory conditions.

**Preparation of doses**

13. In general test substances should be administered in a constant volume over the range of doses to be tested by varying the concentration of the dosing preparation. Where a liquid end product or mixture is to be tested however, the use of the undiluted test substance, ie at a constant concentration, may be more relevant to the subsequent risk assessment of that substance, and is a requirement of some regulatory authorities. In either case, the maximum dose volume for administration must not be exceeded. The maximum volume of liquid that can be administered at one time depends on the size of the test animal. In rodents, the volume should not normally exceed 1mL/100g of body weight: however in the case of aqueous solutions 2 mL/100g body weight can be considered. With respect to the formulation of the dosing preparation, the use of an aqueous solution/suspension/emulsion is recommended wherever possible, followed in order of preference by a solution/suspension/emulsion in oil (e.g. corn oil) and then possibly solution in other vehicles. For vehicles other than water the toxicological characteristics of the vehicle should be known. Doses must be prepared shortly prior to administration unless the stability of the preparation over the period during which it will be used is known and shown to be acceptable.

**PROCEDURE**

**Administration of doses**

14. The test substance is administered in a single dose by gavage using a stomach tube or a suitable intubation canula. In the unusual circumstance that a single dose is not possible, the dose may be given in smaller fractions over a period not exceeding 24 hours.

15. Animals should be fasted prior to dosing (e.g. with the rat, food but not water should be withheld over-night; with the mouse, food but not water should be withheld for 3-4 hours). Following the period of fasting, the animals should be weighed and the test substance administered. After the substance has been administered, food may be withheld for a further 3-4 hours in rats or 1-2 hours in mice. Where a dose is administered in fractions over a period of time, it may be necessary to provide the animals with food and water depending on the length of the period.

**Sighting study**

16. The purpose of the sighting study is to allow selection of the appropriate starting dose for the main study. The test substance is administered to single animals in a sequential manner following the flow charts in Annex 2. The sighting study is completed when a decision on the starting dose for the main study can be made (or if a death is seen at the lowest fixed dose).

17. The starting dose for the sighting study is selected from the fixed dose levels of 5, 50, 300 and 2000 mg/kg as a dose expected to produce evident toxicity based, when possible, on evidence from *in vivo* and *in vitro* data from the same chemical and from structurally related chemicals. In the absence of such information, the starting dose will be 300 mg/kg.

18. A period of at least 24 hours will be allowed between the dosing of each animal. All animals should be observed for at least 14 days.

19. Exceptionally, and only when justified by specific regulatory needs, the use of an additional upper fixed dose level of 5000 mg/kg may be considered (see Annex 4). For reasons of animal welfare concern, testing of animals in GHS Category 5 ranges (2000-5000mg/kg) is discouraged and should only be considered when there is a strong likelihood that results of such a test have a direct relevance for protecting human or animal health or the environment.

20. In cases where an animal tested at the lowest fixed dose level (5mg/kg) in the sighting study dies, the normal procedure is to terminate the study and assign the substance to GHS Category 1 (as shown in Annex 2). However, if further confirmation of the classification is required, an optional supplementary procedure may be conducted, as follows. A second animal is dosed at 5mg/kg. If this second animal dies, then GHS Category 1 will be confirmed and the study will be immediately terminated. If the second animal survives, then a maximum of three additional animals will be dosed at 5mg/kg. Because there will be a high risk of mortality, these animals should be dosed in a sequential manner to protect animal welfare. The time interval between dosing each animal should be sufficient to establish that the previous animal is likely to survive. If a second death occurs, the dosing sequence will be immediately terminated and no further animals will be dosed. Because the occurence of a second death (irrespective of the number of animals tested at the time of termination) falls into outcome A (2 or more deaths), the classification rule of Annex 3 at the 5mg/kg fixed dose is followed (Category 1 if there are 2 or more deaths or Category 2 if there is no more than 1 death).

**Main study**

**Numbers of animals and dose levels**

21. The action to be taken following testing at the starting dose level is indicated by the flow charts in Annex 3. One of three actions will be required; either stop testing and assign the appropriate hazard classification class, test at a higher fixed dose or test at a lower fixed dose. However, to protect animals, a dose level that caused death in the sighting study will not be revisited in the main study (see Annex 3). Experience has shown that the most likely outcome at the starting dose level will be that the substance can be classified and no further testing will be necessary.

22. A total of five animals of one sex will normally be used for each dose level investigated. The five animals will be made up of one animal from the sighting study dosed at the selected dose level together with an additional four animals (except, unusually, if a dose level used on the main study was not included in the sighting study).

23. The time interval between dosing at each level is determined by the onset, duration, and severity of toxic signs. Treatment of animals at the next dose should be delayed until one is confident of survival of the previously dosed animals. A period of 3 or 4 days between dosing at each dose level is recommended, if needed, to allow for the observation of delayed toxicity. The time interval may be adjusted as appropriate, e.g., in case of inconclusive response.

24. When the use of an upper fixed dose of 5000 mg/kg is considered, the procedure outlined in Annex 4 should be followed (see also paragraph 19).

**Limit test**

25. The limit test is primarily used in situations where the experimenter has information indicating that the test material is likely to be nontoxic, i.e., having toxicity only above regulatory limit doses. Information about the toxicity of the test material can be gained from knowledge about similar tested

compounds or similar tested mixtures or products, taking into consideration the identity and percentage of components known to be of toxicological significance. In those situations where there is little or no information about its toxicity, or in which the the test material is expected to be toxic, the main test should be performed.

26. Using the normal procedure, a sighting study starting dose of 2000mg/kg (or exceptionally 5000mg/kg) followed by dosing of a further four animals at this level serves as a limit test for this guideline.

## OBSERVATIONS

27. Animals are observed individually after dosing at least once during the first 30 minutes, periodically during the first 24 hours, with special attention given during the first 4 hours, and daily thereafter, for a total of 14 days, except where they need to be removed from the study and humanely killed for animal welfare reasons or are found dead. However, the duration of observation should not be fixed rigidly. It should be determined by the toxic reactions, time of onset and length of recovery period, and may thus be extended when considered necessary. The times at which signs of toxicity appear and disappear are important, especially if there is a tendency for toxic signs to be delayed (11). All observations are systematically recorded, with individual records being maintained for each animal.

28. Additional observations will be necessary if the animals continue to display signs of toxicity. Observations should include changes in skin and fur, eyes and mucous membranes, and also respiratory, circulatory, autonomic and central nervous systems, and somatomotor activity and behaviour pattern. Attention should be directed to observations of tremors, convulsions, salivation, diarrhoea, lethargy, sleep and coma. The principles and criteria summarised in the Humane Endpoints Guidance Document should be taken into consideration (8). Animals found in a moribund condition and animals showing severe pain or enduring signs of severe distress should be humanely killed. When animals are killed for humane reasons or found dead, the time of death should be recorded as precisely as possible.

### Body weight

29. Individual weights of animals should be determined shortly before the test substance is administered and at least weekly thereafter. Weight changes should be calculated and recorded. At the end of the test surviving animals are weighed and then humanely killed.

### Pathology

30. All test animals (including those that die during the test or are removed from the study for animal welfare reasons) should be subjected to gross necropsy. All gross pathological changes should be recorded for each animal. Microscopic examination of organs showing evidence of gross pathology in animals surviving 24 or more hours after the initial dosing may also be considered because it may yield useful information.

## DATA AND REPORTING

### Data

31. Individual animal data should be provided. Additionally, all data should be summarised in tabular form, showing for each test group the number of animals used, the number of animals displaying signs of toxicity, the number of animals found dead during the test or killed for humane reasons, time of death of individual animals, a description and the time course of toxic effects and reversibility, and necropsy findings.

**Test report**

32. The test report must include the following information, as appropriate:

Test substance:

- physical nature, purity, and, where relevant, physico-chemical properties (including isomerisation);
- identification data, including CAS number.

Vehicle (if appropriate):

- justification for choice of vehicle, if other than water.

Test animals:

- species/strain used;
- microbiological status of the animals, when known;
- number, age and sex of animals (including, where appropriate, a rationale for use of males instead of females);
- source, housing conditions, diet etc.

Test conditions:

- details of test substance formulation, including details of the physical form of the material administered;
- details of the administration of the test substance including dosing volumes and time of dosing;
- details of food and water quality (including diet type/source, water source);
- the rationale for the selection of the starting dose.

Results:

- tabulation of response data and dose level for each animal (i.e. animals showing signs of toxicity including mortality, nature, severity and duration of effects);
- tabulation of body weight and body weight changes;
- individual weights of animals at the day of dosing, in weekly intervals thereafter, and at time of death or sacrifice;
- date and time of death if prior to scheduled sacrifice;
- time course of onset of signs of toxicity and whether these were reversible for each animal;
- necropsy findings and histopathological findings for each animal, if available.

Discussion and interpretation of results.

Conclusions.

**LITERATURE**

(1) British Toxicology Society Working Party on Toxicity (1984). Special report: a new approach to the classification of substances and preparations on the basis of their acute toxicity. Human Toxicol., 3, 85-92.

(2) Van den Heuvel, M.J., Dayan, A.D. and Shillaker, R.O. (1987). Evaluation of the BTS approach to the testing of substances and preparations for their acute toxicity. Human Toxicol., 6, 279-291.

(3) Van den Heuvel, M.J., Clark, D.G., Fielder, R.J., Koundakjian, P.P., Oliver, G.J.A., Pelling, D., Tomlinson, N.J. and Walker, A.P. (1990). The international validation of a fixed-dose procedure as an alternative to the classical $LD_{50}$ test. Fd. Chem. Toxicol. 28, 469-482.

(4) Whitehead, A. and Curnow, R.N. (1992). Statistical evaluation of the fixed-dose procedure. Fd. Chem. Toxicol., 30, 313-324.

(5) Stallard, N. and Whitehead, A. (1995). Reducing numbers in the fixed-dose procedure. Human Exptl. Toxicol. 14, 315-323.

(6) Stallard, N., Whitehead, A. and Ridgeway, P. (2000). Statistical evaluation of modifications to the fixed dose procedure (manuscript in preparation).

(7) OECD (2000). Guidance Document on Acute Oral Toxicity. Environmental Health and Safety Monograph Series on Testing and Assessment No.24.

(8) OECD (2000). Guidance Document on the Recognition, Assessment and Use of Clinical Signs as Humane Endpoints for Experimental Animals Used in Safety Evaluation. Environmental Health and Safety Monograph Series on Testing and Assesment No 19.

(9) OECD (1998). Harmonised Integrated Hazard Classification for Human Health and Environmental Effects of Chemical Substances as endorsed by the 28th Joint Meeting of the Chemicals Committee and the Working Party on Chemicals in November 1998, Part 2, p.11 [http://webnet1.oecd.org/oecd/pages/home/displaygeneral/0,3380,EN-documents-521-14-no-24-no-0,FF.html].

(10) Lipnick, R.L., Cotruvo, J.A., Hill, R.N., Bruce, R.D., Stitzel, K.A., Walker, A.P., Chu, I., Goddard, M., Segal, L., Springer, J.A. and Myers, R.C. (1995). Comparison of the Up-and-Down, Conventional $LD_{50}$, and Fixed-Dose Acute Toxicity Procedures. Fd. Chem. Toxicol. 33, 223-231.

(11) Chan P.K and A.W. Hayes (1994) Chapter 16 Acute Toxicity and Eye Irritation In: Principles and Methods of Toxicology. 3rd Edition. A.W. Hayes , Editor. Raven Press, Ltd. New York, USA.

## ANNEX 1

### DEFINITIONS

Acute oral toxicity refers to those adverse effects occurring following oral administration of a single dose of a substance, or multiple doses given within 24 hours.

Delayed death means that an animal does not die or appear moribund within 48 hours but dies later during the 14-day observation period.

Dose is the amount of test substance administered. Dose is expressed as weight of test substance per unit weight of test animal (e.g. mg/kg).

Evident toxicity is a general term describing clear signs of toxicity following the administration of test substance, (see Van den Heuvel, M.J., Clark, D.G., Fielder, R.J., Koundakjian, P.P., Oliver, G.J.A., Pelling, D., Tomlinson, N.J. and Walker, A.P. (1990). The international validation of a fixed-dose procedure as an alternative to the classical $LD_{50}$ test. Fd. Chem. Toxicol. 28, 469-482. (3) for examples) such that at the next highest fixed dose either severe pain and enduring signs of severe distress, moribund status (criteria are presented in the Humane Endpoints Guidance Document (8), or probable mortality in most animals can be expected.

GHS: Globally Harmonised Classification System for Chemical Substances and Mixtures. A joint activity of OECD (human health and the environment), UN Committee of Experts on Transport of Dangerous Goods (physical–chemical properties) and ILO (hazard communication) and co-ordinated by the Interorganisation Programme for the Sound Management of Chemicals (IOMC).

Impending death: when moribund state or death is expected prior to the next planned time of observation. Signs indicative of this state in rodents could include convulsions, lateral position, recumbence, and tremor. (See the Humane Endpoint Guidance Document (8) for more details).

LD50 (median lethal oral dose) is a statistically derived single dose of a substance that can be expected to cause death in 50 per cent of animals when administered by the oral route. The LD50 value is expressed in terms of weight of test substance per unit weight of test animal (mg/kg).

Limit dose refers to a dose at an upper limitation on testing (2000 or 5000 mg/kg).

Moribund status: being in a state of dying or inability to survive, even if treated. (See the Humane Endpoint Guidance Document (8) for more details).

Predictable death: presence of clinical signs indicative of death at a known time in the future before the planned end of the experiment, for example: inability to reach water or food. (See the Humane Endpoint Guidance Document (8) for more details).

**OECD/OCDE** **420**

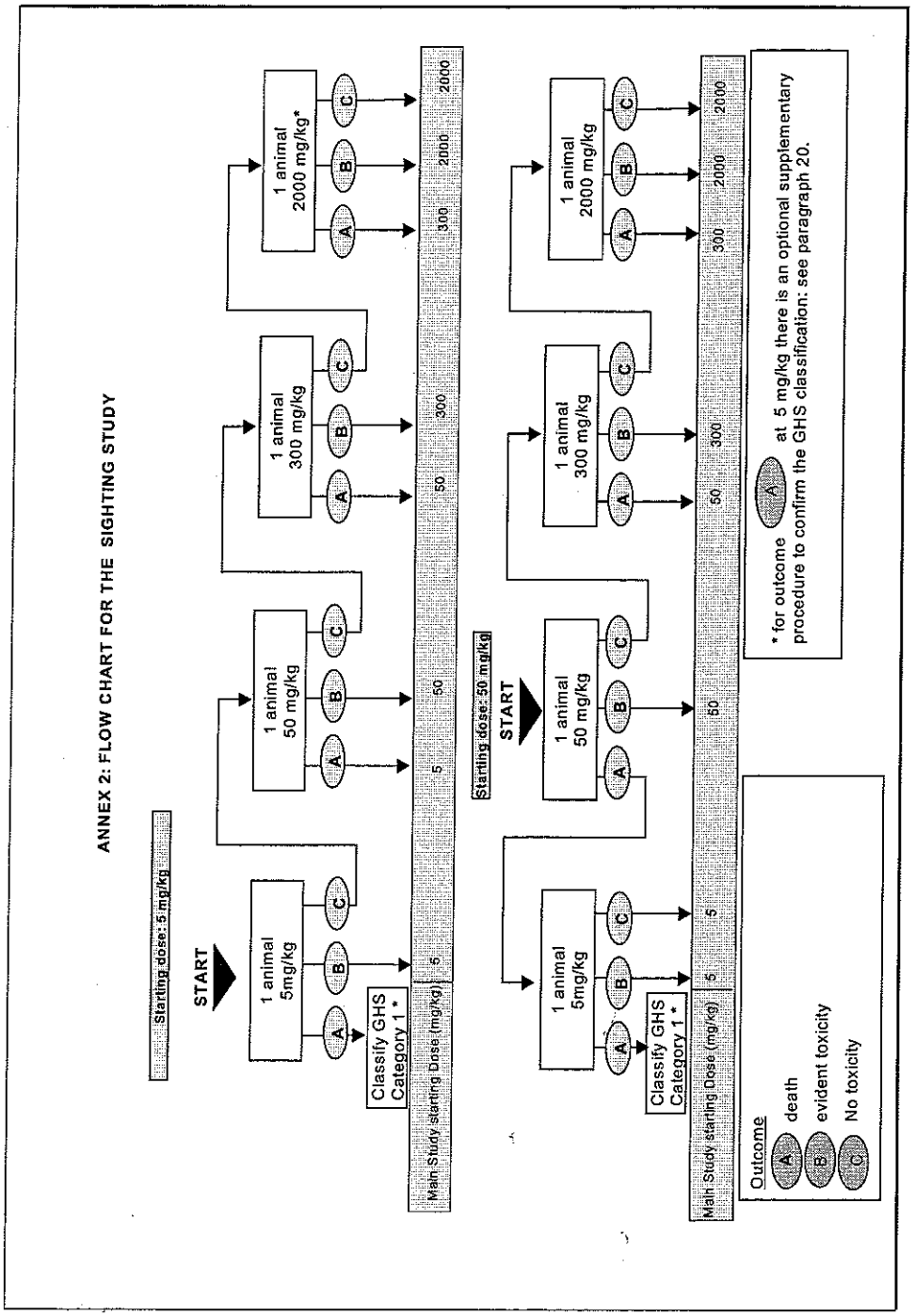


9/14

**OECD/OCDE**

**420**

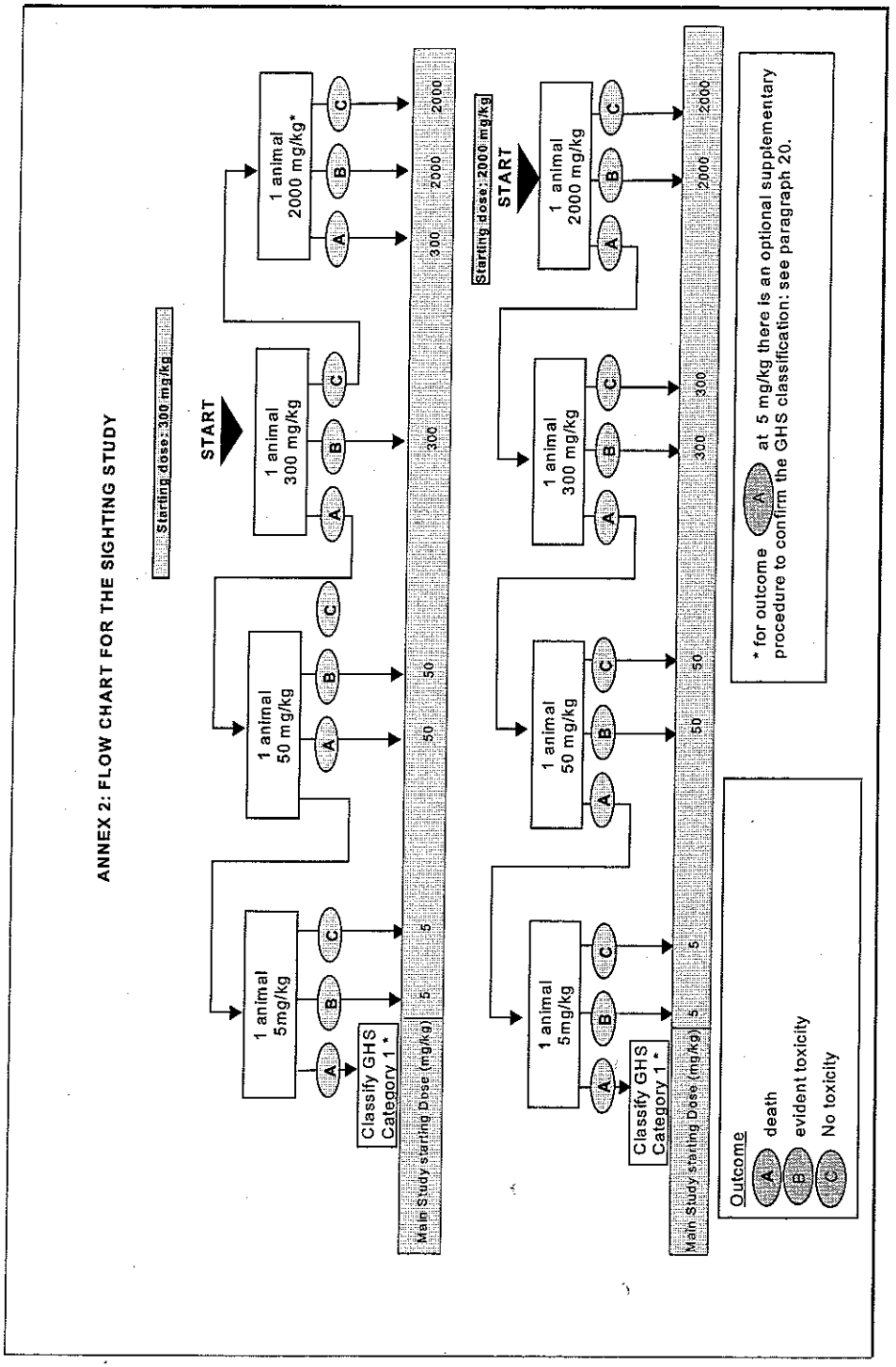


10/14

**OECD/OCDE** **420**

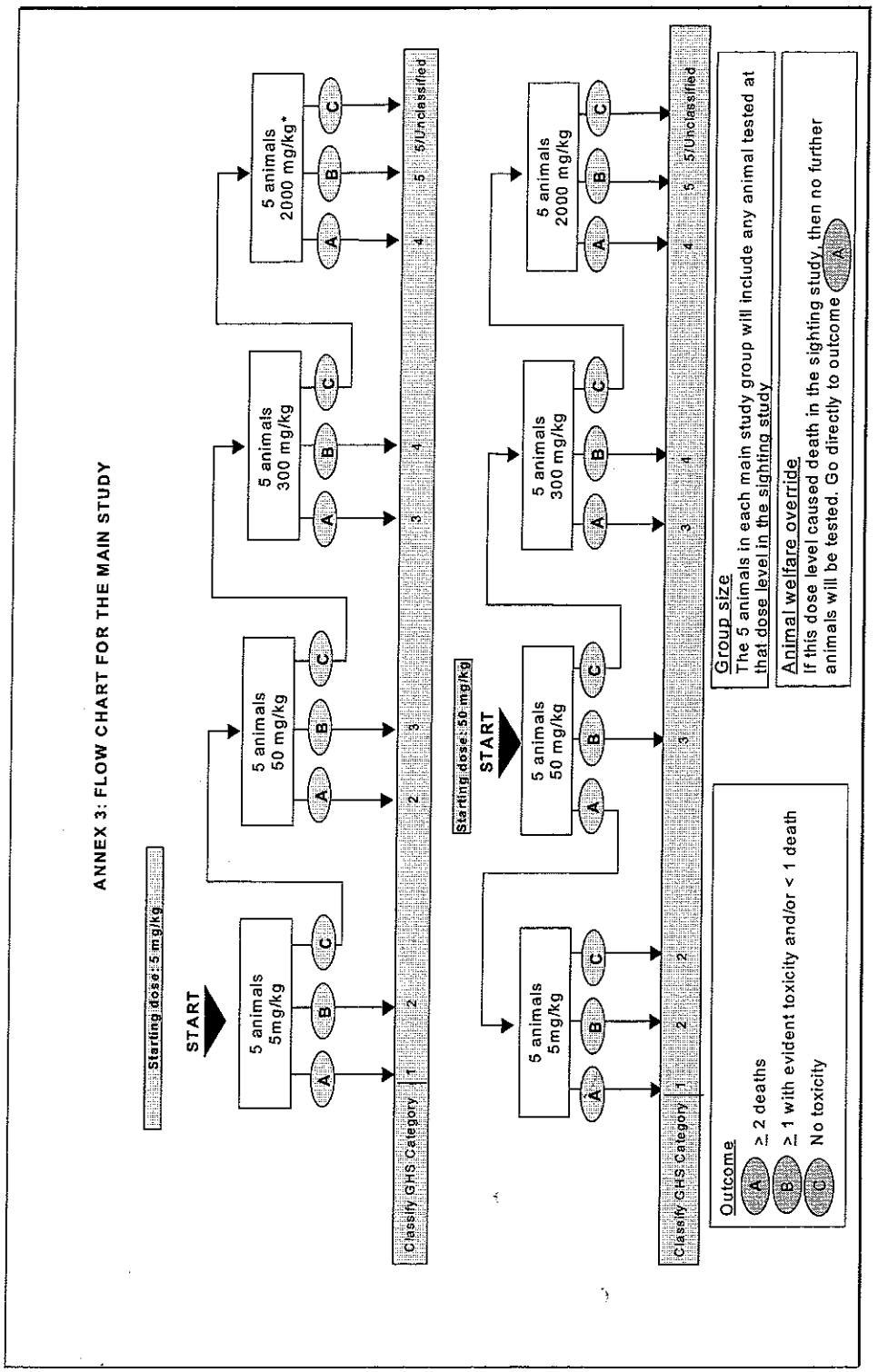


11/14

420 OECD/OCDE

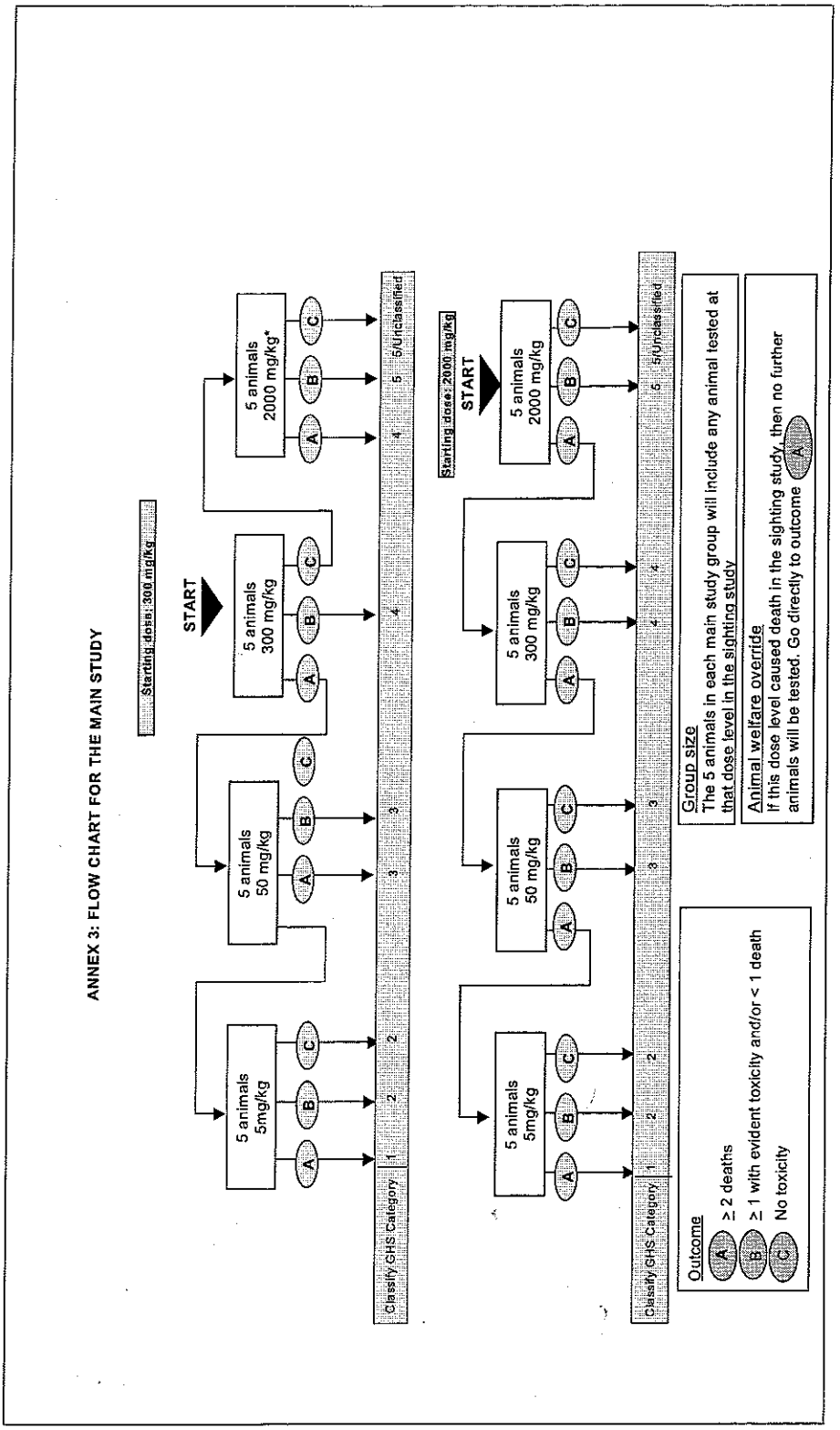


12/14

## ANNEX 4

### CRITERIA FOR CLASSIFICATION OF TEST SUBSTANCES WITH EXPECTED LD50 VALUES EXCEEDING 2000 MG/KG WITHOUT THE NEED FOR TESTING.

1. Criteria for hazard Category 5 are intended to enable the identification of test substances which are of relatively low acute toxicity hazard but which, under certain circumstances may present a danger to vulnerable populations. These substances are anticipated to have an oral or dermal LD50 in the range of 2000-5000 mg/kg or equivalent doses for other routes. Test substances could be classified in the hazard category defined by: 2000mg/kg <LD50 < 5000mg/kg (Category 5 in the GHS) in the following cases:

a) if directed to this category by any of the testing schemes of Annex 3, based on mortality incidences;
b) if reliable evidence is already available that indicates the LD50 to be in the range of Category 5 values; or other animal studies or toxic effects in humans indicate a concern for human health of an acute nature;
c) through extrapolation, estimation or measurement of data if assignment to a more hazardous category is not warranted and
   - reliable information is available indicating significant toxic effects in humans, or
   - any mortality is observed when tested up to category 4 values by the oral route, or
   - where expert judgement confirms significant clinical signs of toxicity, when tested up to Category 4 values, except for diarrhoea, piloerection or an ungroomed appearance, or
   - where expert judgement confirms reliable information indicating the potential for significant acute effects from the other animal studies.

### TESTING AT DOSES ABOVE 2000 MG/KG

2. Exceptionally, and only when justified by specific regulatory needs, the use of an additional upper fixed dose level of 5000 mg/kg may be considered. Recognising the need to protect animal welfare, testing at 5000 mg/kg is discouraged and should only be considered when there is a strong likelihood that the results of such a test would have a direct relevance for protecting animal or human health (9).

**Sighting Study**

3. The decision rules governing the sequential procedure presented in Annex 2 are extended to include a 5000 mg/kg dose level. Thus, when a sighting study starting dose of 5000 mg/kg is used outcome A (death) will require a second animal to be tested at 2000 mg/kg; outcomes B and C (evident toxicity or no toxicity) will allow the selection of 5000 mg/kg as the main study starting dose. Similarly, if a starting dose other than 5000 mg/kg is used then testing will progress to 5000 mg/kg in the event of outcomes B or C at 2000 mg/kg; a subsequent 5000 mg/kg outcome A will dictate a main study starting dose of 2000 mg/kg and outcomes B and C will dictate a main study starting dose of 5000 mg/kg.

**Main Study**

4. The decision rules governing the sequential procedure presented in Annex 3 are extended to include a 5000 mg/kg dose level. Thus, when a main study starting dose of 5000 mg/kg is used, outcome A (≥2 deaths) will require the testing of a second group at 2000 mg/kg; outcome B (evident toxicity and/or ≤1 death) or C (no toxicity) will result in the substance being unclassified according to GHS.

Similarly, if a starting dose other than 5000 mg/kg is used then testing will progress to 5000 mg/kg in the event of outcome C at 2000 mg/kg; a subsequent 5000 mg/kg outcome A will result in the substance being assigned to GHS Category 5 and outcomes B or C will lead to the substance being unclassified.

# Appendix M5

## OECD Guidance on Acute Oral Toxicity Testing

***[This Page Intentionally Left Blank***

**Unclassified** **ENV/JM/MONO(2001)4**

Organisation de Coopération et de Développement Economiques
Organisation for Economic Co-operation and Development **23-Jul-2001**

**English - Or. English**

**ENVIRONMENT DIRECTORATE**
**JOINT MEETING OF THE CHEMICALS COMMITTEE AND**
**THE WORKING PARTY ON CHEMICALS, PESTICIDES AND BIOTECHNOLOGY**

**ENV/JM/MONO(2001)4**
**Unclassified**

**OECD SERIES ON TESTING AND ASSESSMENT**
**Number 24**

# GUIDANCE DOCUMENT ON ACUTE ORAL TOXICITY TESTING

**English - Or. English**

**JT00111082**

**Document complet disponible sur OLIS dans son format d'origine**
**Complete document available on OLIS in its original format**

ENV/JM/MONO(2001)4

**OECD Environment, Health and Safety Publications**

**Series on Testing and Assessment**

**N° 24**

# GUIDANCE DOCUMENT ON ACUTE ORAL TOXICITY TESTING

**Environment Directorate**

**ORGANISATION FOR ECONOMIC CO-OPERATION AND DEVELOPMENT**

**Paris**

**June 2001**

**Also published in the Series on Testing and Assessment**

No. 1, *Guidance Document for the Development of OECD Guidelines for Testing of Chemicals (1993; reformatted 1995)*

No. 2, *Detailed Review Paper on Biodegradability Testing (1995)*

No. 3, *Guidance Document for Aquatic Effects Assessment (1995)*

No. 4, *Report of the OECD Workshop on Environmental Hazard/Risk Assessment (1995)*

No. 5, *Report of the SETAC/OECD Workshop on Avian Toxicity Testing (1996)*

No. 6, *Report of the Final Ring-test of the Daphnia magna Reproduction Test (1997)*

No. 7, *Guidance Document on Direct Phototransformation of Chemicals in Water (1997)*

No. 8, *Report of the OECD Workshop on Sharing Information about New Industrial Chemicals Assessment (1997)*

No. 9, *Guidance Document for the Conduct of Studies of Occupational Exposure to Pesticides During Agricultural Application (1997)*

No. 10, *Report of the OECD Workshop on Statistical Analysis of Aquatic Toxicity Data (1998)*

No. 11, *Detailed Review Paper on Aquatic Testing Methods for Pesticides and industrial Chemicals (1998)*

No. 12, *Detailed Review Document on Classification Systems for Germ Cell Mutagenicity in OECD Member Countries (1998)*

No. 13, *Detailed Review Document on Classification Systems for Sensitising Substances in OECD Member Countries (1998)*

No. 14, *Detailed Review Document on Classification Systems for Eye Irritation/Corrosion in OECD Member Countries (1998)*

No. 15, *Detailed Review Document on Classification Systems for Reproductive Toxicity in OECD Member Countries (1998)*

No. 16, *Detailed Review Document on Classification Systems for Skin Irritation/Corrosion in OECD Member Countries (1998)*

No. 17, *Environmental Exposure Assessment Strategies for Existing Industrial Chemicals in OECD Member Countries (1999)*

No. 18, *Report of the OECD Workshop on Improving the Use of Monitoring Data in the Exposure Assessment of Industrial Chemicals (2000)*

No. 19, *Guidance Document on the Recognition, Assessment and Use of Clinical Signs as Humane Endpoints for Experimental Animals used in Safety Evaluation (2000)*

No. 20, *Revised Draft Guidance Document for Neurotoxcity Testing (2000)*

No. 21, *Detailed Review Paper: Appriasal of Test Methods for Sex Disrupting Chemicals (2000)*

No. .22, *Guidance Document for the Performance of Out-door Monolith Lysimeter Studies (2000)*

No. 23, *Guidance Document on Aquatic Toxicity Testing of Difficult Substances and Mixtures (2000)*

## About the OECD

The Organisation for Economic Co-operation and Development (OECD) is an intergovernmental organisation in which representatives of 29 industrialised countries in North America, Europe and the Pacific, as well as the European Commission, meet to co-ordinate and harmonise policies, discuss issues of mutual concern, and work together to respond to international problems. Most of the OECD's work is carried out by more than 200 specialised Committees and subsidiary groups composed of Member country delegates. Observers from several countries with special status at the OECD, and from interested international organisations, attend many of the OECD's Workshops and other meetings. Committees and subsidiary groups are served by the OECD Secretariat, located in Paris, France, which is organised into Directorates and Divisions.

The work of the OECD related to chemical safety is carried out in the **Environment, Health and Safety Programme**. As part of its work on chemical testing, the OECD has issued several Council Decisions and Recommendations (the former legally binding on Member countries), as well as numerous Guidance Documents and technical reports. The best known of these publications, the **OECD Test Guidelines**, is a collection of methods used to assess the hazards of chemicals and of chemical preparations such as pesticides. These methods cover tests for physical and chemical properties, effects on human health and wildlife, and accumulation and degradation in the environment. The OECD Test Guidelines are recognised world-wide as the standard reference tool for chemical testing.

More information about the Environment, Health and Safety Programme and its publications (including the Test Guidelines) is available on the OECD's World Wide Web site (see next page).

The Environment, Health and Safety Programme co-operates closely with other international organisations. This document was produced within the framework of the Inter-Organisation Programme for the Sound Management of Chemicals (IOMC).

**The Inter-Organization Programme for the Sound Management of Chemicals (IOMC) was established in 1995 by UNEP, ILO, FAO, WHO, UNIDO and the OECD (the Participating Organisations), following recommendations made by the 1992 UN Conference on Environment and Development to strengthen co-operation and increase international co-ordination in the field of chemical safety. UNITAR joined the IOMC in 1997 to become the seventh Participating Organisation. The purpose of the IOMC is to promote co-ordination of the policies and activities pursued by the Participating Organisations, jointly or separately, to achieve the sound management of chemicals in relation to human health and the environment.**

**This publication is available electronically, at no charge.**

**For the complete text of this and many other Environment, Health and Safety publications, consult the OECD's World Wide Web site (http://www.oecd.org/ehs/)**

**or contact:**

**OECD Environment Directorate,**
**Environment, Health and Safety Division**

**2 rue André-Pascal**
**75775 Paris Cedex 16**
**France**

**Fax: (33-1) 45 24 16 75**

**E-mail: ehscont@oecd.org**

## INTRODUCTION

1. OECD Guidelines for the Testing of Chemicals are periodically reviewed in the light of scientific progress or changing assessment practices. The conventional acute oral toxicity test (formerly OECD Test Guideline 401) is the most heavily criticised test in terms of animal welfare and this concern was the driving force behind the development of three alternative tests for acute oral toxicity (Test Guideline 420, 423, 425). Anticipating the presence of validated alternatives, Member countries took the initiative to plan the deletion of Guideline 401.

2. A Nominated Expert Meeting (Rome 1998) and an Expert Consultation Meeting, (Arlington 1999) were convened to determine the acute oral toxicity data requirement needs of Member countries and to assess the capabilities of the alternatives to meet these needs. On the basis of these technical discussions, the 29th Joint Meeting concluded in June 1999 that not all data needs could be met by the alternatives (and not always by Guideline 401). The Joint Meeting decided that Guidelines 420, 423 and 425 should be revised to meet regulatory needs of the Member countries including, where possible, the provision of confidence intervals and the slope of the dose response curve, to support classification and assessment of acute toxicity at 5 and at 5000 mg/kg, and should include the use of a single sex, appropriate statistical methods and, to the extent feasible, a reduction in the number of animals used and the introduction of refinements to reduce the pain and distress of the animals. The guidelines should also be able to allow the classification of substances according to the Globally Harmonised System (GHS) for the classification of chemicals which cause acute toxicity (1).

3. The revision of Guidelines 420, 423 and 425 was completed in 2000 following a second Expert Consultation Meeting (Paris, 2000) and the process of deletion of guideline 401 was started.

## PURPOSE

4. The purpose of this Guidance Document is to provide information for both the regulated community and regulators to assist with the choice of the most appropriate Guideline to enable particular data requirements to be met while reducing the number of animals used and animal suffering. The Guidance Document also contains additional information on the conduct and interpretation of Guidelines 420, 423 and 425.

## DATA NEEDS

5. Acute oral toxicity data are used to satisfy hazard classification and labelling requirements, for risk assessment for human health and the environment, and when estimating the toxicity of mixtures. The provision of either a point estimate of the $LD_{50}$ value or range estimate of the $LD_{50}$ generally meets the acute oral toxicity data requirements for classification for all regulatory authorities in the areas of industrial chemicals, consumer products and for many pesticide applications. OECD document "Revised Analysis of Responses Received from Member Countries to the Questionnaire on Data Requirements for Acute Oral Toxicity" provides an overview of acute toxicity data requirements applicable in 1999 (2). The data needs of the majority of Member countries can also be met with the imposition of a limit dose of 2000 mg/kg. However, several countries have a requirement for information on toxicity at dose levels in the range 2000 to 5000 mg/kg for substances with $LD_{50}$ values in excess of 2000 mg/kg. Although many authorities find it acceptable to use data from observations made at doses of 2000 mg/kg or below, as

described in the GHS classification criteria (which includes a 2000-5000 mg/kg category), testing in this range may be necessary to meet the needs of a few regulatory authorities. For example, some authorities regulating consumer products and pesticides need a point estimate of $LD_{50}$ and confidence intervals, and information on toxicity at levels up to or above 5000 mg/kg. These authorities use $LD_{50}$ data in this way for assessment of risk to humans and also for risk assessments for environmental effects to avoid the need for further animal studies on pesticide products. Furthermore, at least one country has a need for a test at 5000 mg/kg for biological and safer pesticides and products to which the general public are exposed, to provide characterisation of acute toxicity and to support bridging across data sets for structurally related substances, again to eliminate or minimise the requirements for additional animal testing. For reasons of animal welfare concern, testing of animals in GHS category 5 ranges (2000-5000mg/kg) is discouraged and should only be considered when there is a strong likelihood that results of such a test have a direct relevance for protecting human or animal health or the environment.

6. Some national and international regulatory systems estimate the toxicity of mixtures from calculations using weighted averages of the $LD_{50}$ point estimate of the components when actual data on the mixture are not available. The resulting calculated toxicity values are used for hazard classification of mixtures. A dose response curve is also sometimes needed for extrapolation and a reliable identification of hazard and risk posed by mixtures, to avoid testing each mixture and thus to allow a significant saving of animal use. At present, agreed approaches for estimating the toxicity of mixtures using range data are only accepted in the EU and in some other countries. However, the OECD Expert Group on Hazard Classification Criteria for Mixtures has recently agreed that mixtures can be classified using either point or range estimates of the LD50 of each component (3).

7. Acute oral toxicity testing by OECD methods is not required for pharmaceuticals. Pharmaceutical methods are specified by the International Committee on Harmonisation (ICH). In some specific cases such as imaging and antineoplastic agents, estimates of acute toxicity are needed to support single dose studies in man. These studies call for testing to fully characterise the toxicity in the low toxicity region and may involve doses above 2000 mg/kg. However, the study designs for these special purpose studies are different from any of the current OECD acute toxicity guidelines.

## COMPARISON OF GUIDELINES 420, 423 AND 425

### Outline Of The Methodology

8. All of the guidelines involve the administration of a single bolus dose of test substance to fasted healthy young adult rodents by oral gavage, observation for up to 14 days after dosing, recording of body weight and the necropsy of all animals. Doses may be administered based on a constant volume or a constant concentration depending upon the needs of the toxicologist and the regulatory authorities. Some authorities prefer that substances sold to the public should be tested as constant concentration unless the volumes are too small to administer accurately. Since the effects at the same dose may be different if the materials are diluted, it is important for the toxicologist to consider how the information will be used. If the material will primarily be used diluted in mixtures, then constant volume may be appropriate. On the other hand, if the material is to be used neat, particularly if it may be irritating, the use of constant concentration will be more appropriate (4)(5).

9. Each animal should be selected from the available animals in a random fashion on the day of dosing. In recognition of the fact that most animal suppliers do not indicate littermates, the guidelines do not call for randomizing animals from a single litter across dose groups. Females should be nulliparous

and non-pregnant. At the commencement of its dosing, each animal should be between 8 and 12 weeks old and its weight should fall in an interval within ±20% of the mean weight of all previously dosed animals taken on their day of dosing. As the mean weight will increase as the animals age, this method tends to correct for the change in animals weights with time. In order to conform to these age and weight requirements at the start of dosing of each animal, it may be necessary to order animals sequentially as the tests can sometimes take several weeks to complete. The primary endpoint for Guidelines 423 and 425 is mortality, but for Guideline 420 it is the observation of clear signs of toxicity (termed: evident toxicity).

10. **Guideline 420:** A sighting study is included for Guideline 420 in order to choose an appropriate starting dose and to minimise the number of animals used. Pre-specified fixed doses of 5, 50, 300 or 2000 mg/kg are used both in the sighting study and the main study. There is an option to use an additional dose level of 5000 mg/kg, but only when justified by a specific regulatory need. Groups of animals are dosed in a stepwise procedure, with the initial dose being selected as the dose expected to produce some signs of toxicity. Further groups of animals may be dosed at higher or lower fixed doses, depending on the presence of signs of toxicity, until the study objective is achieved; that is, the classification of the test substance based on the identification of the dose(s) causing evident toxicity, except when there are no effects at the highest fixed dose.

11. **Guideline 423:** Pre-specified fixed doses of 5, 50, 300 or 2000 mg/kg are used. There is an option to use an additional dose level of 5000 mg/kg, but only when justified by a specific regulatory need. Groups of animals are dosed in a stepwise procedure, with the initial dose being selected as the dose expected to produce mortality in some animals. Further groups of animals may be dosed at higher or lower fixed doses, depending on the presence of mortality, until the study objective is achieved; that is, the classification of the test substance based on the identification of the dose(s) causing mortality, except when there are no effects at the highest fixed dose.

12. **Guideline 425:** This is also a stepwise procedure, but uses single animals, with the first animal receiving a dose just below the best estimate of the $LD_{50}$. Depending on the outcome for the previous animal, the dose for the next is increased or decreased, usually by a factor of 3.2. This sequence continues until there is a reversal of the initial outcome (i.e., the point where an increasing dose results in death rather than survival, or decreasing dose results in survival rather than death); then, additional animals are dosed following the up-down principle until a stopping criterion is met. If there is no reversal before reaching the selected upper (2000 or 5000 mg/kg) limit dose, then no more than a specified number of animals are dosed at the limit dose. The option to use an upper limit dose of 5000 mg/kg should be taken only when justified by a specific regulatory need.

**Animal Welfare Considerations**

13. All three Guidelines provide significant improvements in the number of animals used in comparison to Guideline 401, which required 20 animals in a test at least. In addition, they all contain a requirement to follow the OECD Guidance Document on Humane Endpoints (6) which should reduce the overall suffering of animals used in this type of toxicity test. Furthermore, Guideline 420 has as its endpoint evident toxicity rather than mortality and uses a sighting study to minimize the numbers of animals and Guideline 425 has a stopping rule which limits the number of animals in a test.

14. **Guideline 420:** Groups of five young adult animals of one sex are dosed per step in the main study. Single animals are used per step in the sighting study. Regulatory experience and statistical modelling has shown that most tests are likely to be completed with either one or two sighting study steps and one main study step, thus using between 5 and 7 animals. Up to 5 animals are used in a limit test.

15. **Guideline 423:** This test uses groups of 3 animals of one sex per step. Regulatory use of this Guideline demonstrates that the average number of animals used is 7. Up to 6 animals are used in a limit test.

16. **Guideline 425:** This test uses single animals of one sex. Statistical modelling indicates that the average number of animals used in this test is about 6-9. Up to 5 animals are used in a limit test.

17. The following estimates of the number of treatment related deaths for tests conducted on substances with $LD_{50}$ values below 5000 mg/kg are based on practical experience and validation studies using earlier versions of these guidelines and statistical modelling.

- **Guideline 420:** typically 1 animal can be expected to die on test.
- **Guideline 423:** 2-3 animals per test can be expected to die in a full test.
- **Guideline 425:** the expected number of deaths is between 2 and 3.

18. For all three guidelines, careful clinical observations should be made at least twice on the day of dosing or more frequently when indicated by the response of the animals to the treatment, and at least once daily thereafter. Additional observations are made if the animals continue to display signs of toxicity. Observations include changes in skin and fur, eyes and mucous membranes, and also respiratory, circulatory, autonomic and central nervous systems, and somatomotor activity and behaviour pattern. Guidance on clinical signs can be found in Chan and Hayes (5). Animals that are moribund or suffering severe pain and distress must be humanely killed. Guidance on clinical signs and objective measurements that are indicative of impending death and/or severe pain and/or distress is available in an OECD Guidance Document (6). Humanely killed animals are considered in the interpretation of the results in the same way as animals that died on test.

**Information Provided By Each Method**

19. Test Guidelines 420 and 423 provide a range estimate of the $LD_{50}$; the ranges are defined by cut-off values of the applied classification system and not as a calculated lower and upper level. In the case of Test Guideline 420 this range is inferred from the fixed dose which produces evident toxicity. Guideline 425 provides a point-estimate of the $LD_{50}$ value with confidence intervals.

20. The results of tests conducted according to Guideline 425 will allow a test substance to be classified according to all the systems in current use, including the new GHS. Test Guidelines 420 and 423 have now been revised to allow classification according to the new GHS. However, in order to cover the transition period until the global implementation of the GHS both Guidelines also allow classification according to existing systems as shown in Annex 1 and 2.

**Limitations Of The Methods**

21. Validations against actual data and statistical simulations identified areas where all three methods may have outcomes which result in a more or less stringent classification than that based on the "true" $LD_{50}$ value (as obtained by the deleted guideline 401). Comparative statistical analysis (see Annex 3) indicated that all are likely to perform poorly for chemicals with shallow dose-response slopes. For all methods, the study outcome is likely to be influenced by the choice of starting dose level(s), relative to the "true" $LD_{50}$ value, especially in the case of shallow slopes. Because Guideline 420 uses evident toxicity as

an endpoint instead of death, information on toxic effects seen only at dose levels close to a lethal dose will not always be obtained (7).

22. Unusually test substances may cause delayed deaths (5 days or more after test substance administration). Substances which cause delayed deaths have an impact on the practicality of conducting a study to Guideline 425 where the duration of testing will be significantly longer compared with other test methods. However, both in Guideline 420 and 423, the finding of a delayed death may require additional lower dose levels to be used or a study to be repeated.

## OPTIMISING THE PERFORMANCE OF THE TEST

23. Each guideline provides procedures to assist in selecting the starting dose, particularly in the event that minimal prior information on the substance itself is available. All available information on the test substance must be made available to the testing laboratory and should be considered prior to conducting the study. Such information will include, for example, the identity and chemical structure of the substance; its physico-chemical properties; the result of any other *in vivo* or *in vitro* toxicity tests on the substance; toxicological data on structurally related substances; the anticipated use(s) of the substance; and the likely regulatory data requirements. This information is necessary to satisfy all concerned that the test is relevant for the protection of human and animal health and mammalian wildlife, to select the most appropriate test to satisfy regulatory requirements and will help in the selection of the starting dose.

24. For all three methods the efficiency of the test, in terms of reliability and numbers of animals used, is optimised by the choice of a starting dose close to (423) or just below (425) the actual $LD_{50}$ or the lowest dose producing evident toxicity (420). When this type of information is not available, all three Guidelines include advice on the starting dose level which should be used to minimise the possibility of biased outcome and adverse effects on animal welfare. As a general principle it is suggested that a starting dose is selected that is slightly lower than the best estimate of the $LD_{50}$ based on available evidence.

25. The limit test is an efficient way to characterise substances of low toxicity when there is sufficient information available indicating that the toxic dose is higher that the limit dose. Each method provides a limit test suitable to the design of the main study. A Limit Test should be conducted only when there are strong indications that the test substance is of low or negligible acute toxicity.

## USE OF A SINGLE SEX

26. Guidelines 420, 423 and 425 are conducted using a single sex in order to reduce variability and as a means of minimising the number of animals used. Normally females are used. This is because literature surveys of conventional $LD_{50}$ tests show that usually there is little difference in sensitivity between the sexes but, in those cases where differences were observed, females were generally slightly more sensitive (8). Although the use of a single sex (females) also contributes to a further decrease in the use of animals in testing, theoretically this may lead to an oversupply of the other sex (males). However, currently the use of males in experimental animal tests clearly exceeds that of females and, thus, the preference for females in acute toxicity testing may well result in a better overall balance of the use of both genders. For chemicals which are direct acting in their toxic mechanism, this may be because female rats have a lower detoxification capacity than males, as measured by specific activity of phase I and II enzymes. However, all available information should be evaluated, for example on chemical analogues and the results of testing for other toxicological endpoints on the chemical itself, as this may indicate that

males may be more sensitive than females. Knowledge that metabolic activation is required for a chemical's toxicity can also indicate that males may be the more sensitive sex.

27. Occasionally, the results of subsequent testing, for example a sub-chronic test, may raise concerns that the more sensitive sex had not been used. In such cases, and only when considerable differences between the sexes are suspected, it may be necessary to conduct another full acute oral toxicity study in the second sex. This is preferable to conducting confirmatory testing in a small group of animals of the second sex as a late satellite to the original test because there is a strong possibility that this would produce results that are difficult to interpret. The impact of conducting a second full test on the overall number of animals used in acute toxicity testing should be small because re-testing is anticipated to be infrequent and the results of the test in one sex, together with data from any subsequent studies, will greatly assist in the selection of starting doses closer to the LD50 in the second test.

## REFERENCES

(1) OECD (1998) A Harmonised Integrated Hazard Classification System for Human Health and Environmental Effects of Chemicals. ENV/MC/CHEM/HCL(98)15/REV2.

(2) OECD(1999). Revised Analysis of Responses Received from Member Countries to the Questionnaire on Data Requirements for Acute Oral Toxicity. Environmental Health and Safety Monograph Series on Testing and Assessment N° 26 [http:// www.oecd.org/ehs/test/monos/htm.]

(3) OECD(2000).Revised Step 2 Proposal for Harmonised Classification Criteria for Mixtures. ENV/JM/HCL(2000)9/REV8.

(4) The Conduct of Acute Toxicity Studies, September 1977, E.P.A. document # 737-R-97-002.

(5) Chan P.K. and Hayes A.W. (1994). Acute Toxicity and Eye Irritancy. In: Principles and Methods of Toxicology. A.W Hayes, Ed. Raven Press Ltd, New York.

(6) OECD (2000). Guidance Document on the Recognition, Assessment and Use of Clinical Signs as Humane Endpoints for Experimental Animals used in Safety Evaluation. Environmental Health and Safety Monograph Series on Testing and Assessment No. 19, September 2000. [http://www.oecd.org/ehs/test/monos/htm]

(7) Van der Heuvel, M.J., Clark, D.G., Fielder, R.J., Koundakjian, P.P., Olivier, G.J.A., Pelling, D., Tomlinson, N.J. and Walker, A.P. (1990). The international validation of a fixed-dose procedure as an alternative to the classical $LD_{50}$ test. Fd. Chem. Toxicol. 28, 469-482.

(8) Lipnick R.L, Cotruvo J.A., Hill R.N., Bruce R.D., Stitzel K.A., Walker A.P., Chu, I., Goddard M., Segal L., Springer J.A., Myers R.C. (1995). Comparison of the Up-and-Down, Conventional LD50 and Fixed Dose Acute Toxicity Procedures. Fd. Chem. Toxicol. 33, 223-231.

## ANNEX 1

## TEST GUIDELINE 420 MAIN STUDY: CLASSIFICATION ACCORDING TO THE CURRENTLY STILL APPLICABLE EU SCHEME TO COVER THE TRANSITION PERIOD UNTIL FULL IMPLEMENTATION OF THE GLOBALLY HARMONISED CLASSIFICATION SYSTEM (GHS)

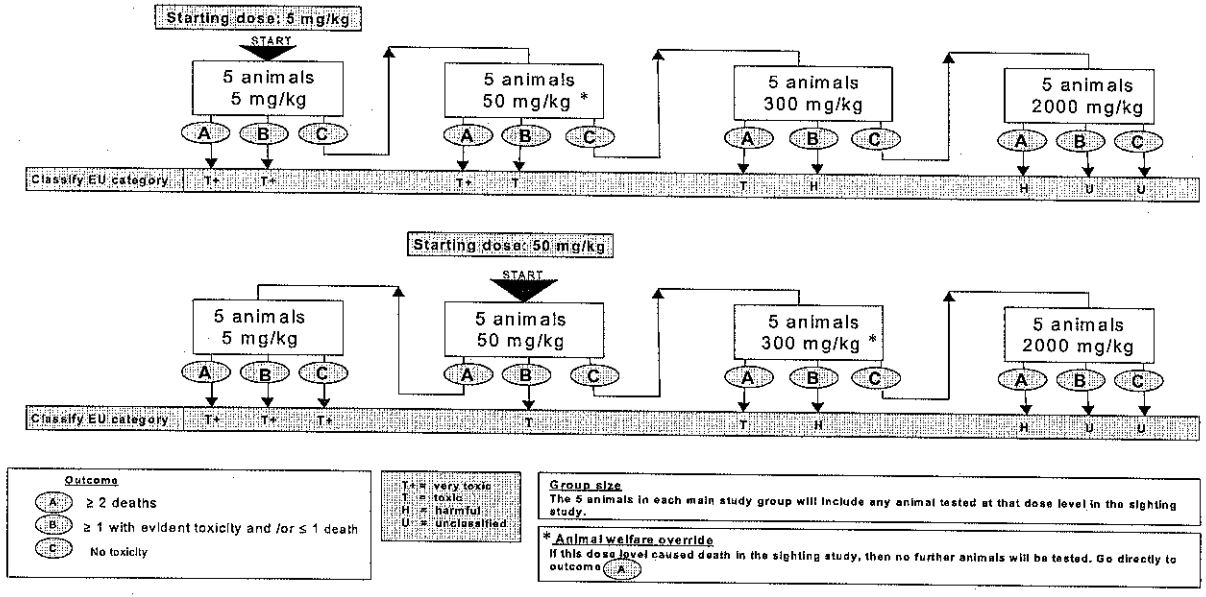

## ANNEX 1 (continued)

## TEST GUIDELINE 420 MAIN STUDY: CLASSIFICATION ACCORDING TO THE CURRENTLY STILL APPLICABLE EU SCHEME TO COVER THE TRANSITION PERIOD UNTIL FULL IMPLEMENTATION OF THE GLOBALLY HARMONISED CLASSIFICATION SYSTEM (GHS)

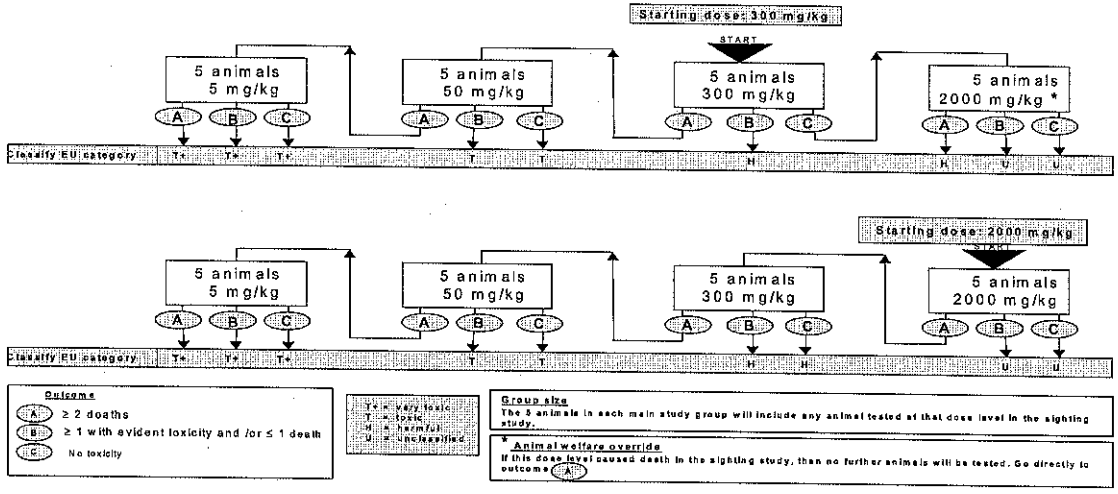

## ANNEX 2

## TEST GUIDELINE 423: CLASSIFICATION ACCORDING TO CURRENTLY STILL APPLICABLE CLASSIFICATION SCHEMES TO COVER THE TRANSITION PERIOD UNTIL FULL IMPLEMENTATION OF THE GLOBALLY HARMONISED CASSIFICATION SYSTEM (GHS)

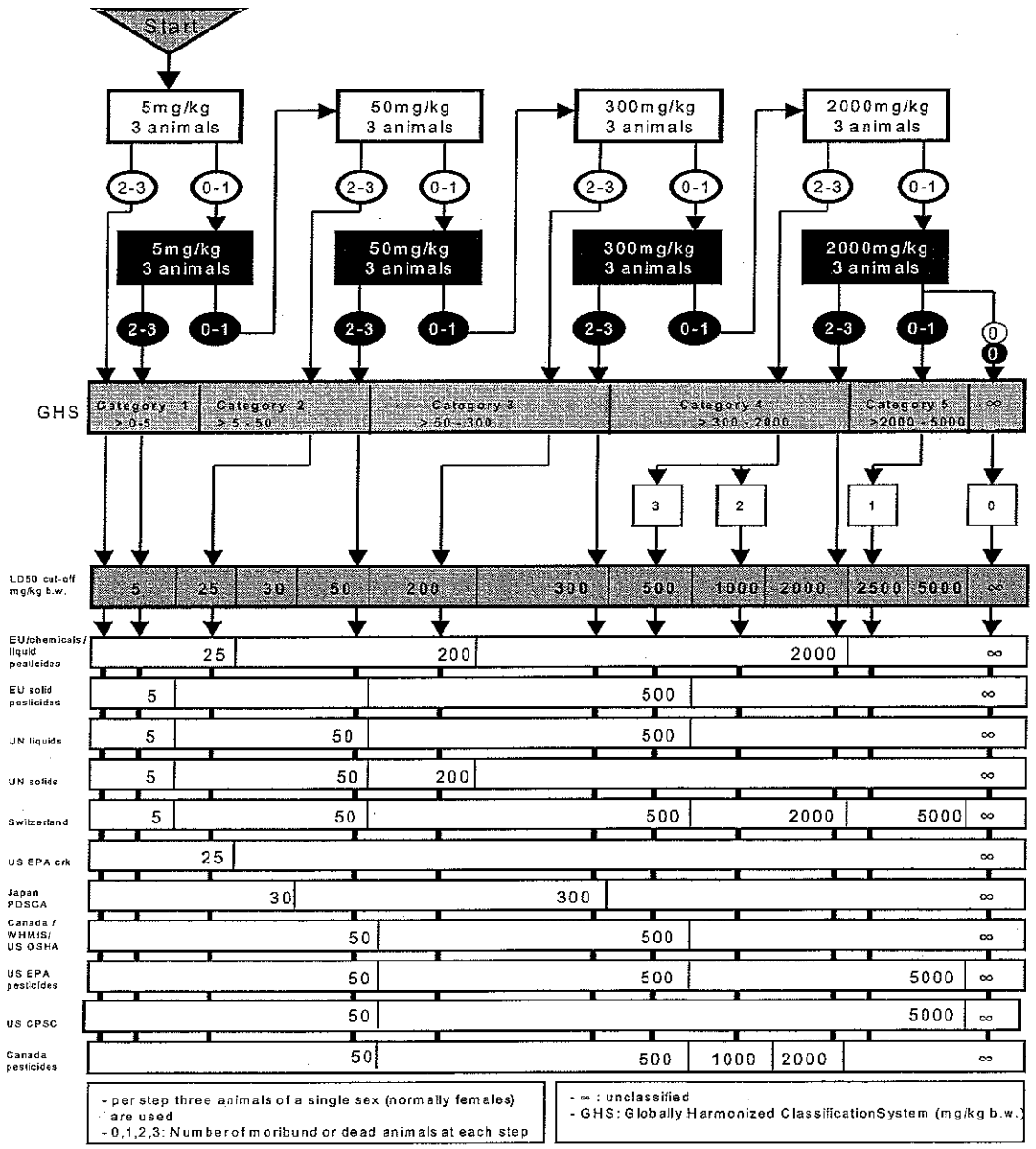

**ANNEX 2 (continued 1)**

**TEST GUIDELINE 423: CLASSIFICATION ACCORDING TO CURRENTLY STILL APPLICABLE CLASSIFICATION SCHEMES TO COVER THE TRANSITION PERIOD UNTIL FULL IMPLEMENTATION OF THE GLOBALLY HARMONISED CASSIFICATION SYSTEM (GHS)**

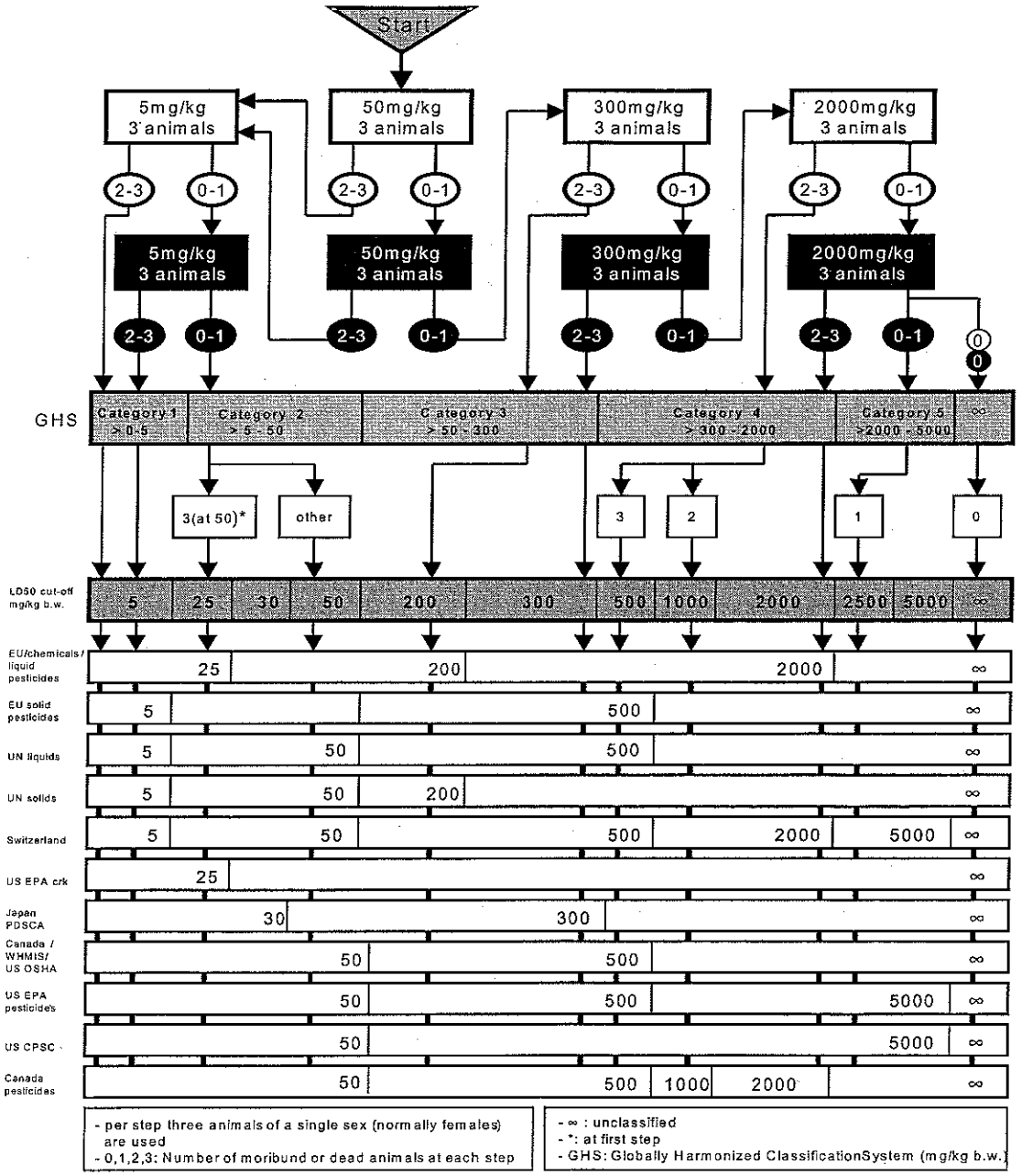

**ANNEX 2 (continued 2)**

**TEST GUIDELINE 423: CLASSIFICATION ACCORDING TO CURRENTLY STILL APPLICABLE CLASSIFICATION SCHEMES TO COVER THE TRANSITION PERIOD UNTIL FULL MPLEMENTATION OF THE GLOBALLY HARMONISED CASSIFICATION SYSTEM (GHS)**

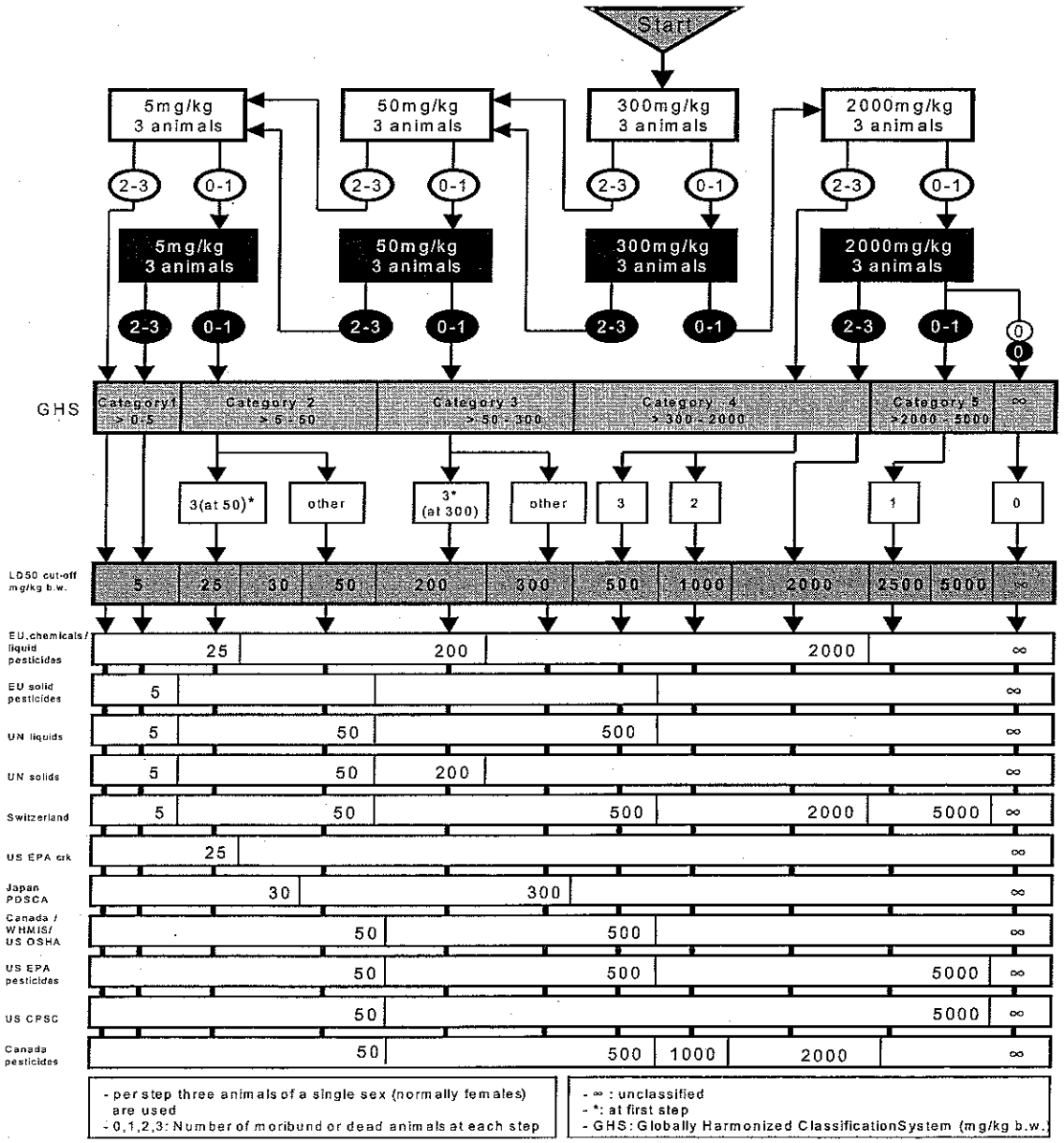

**ANNEX 2 (continued 3)**

**TEST GUIDELINE 423: CLASSIFICATION ACCORDING TO CURRENTLY STILL APPLICABLE CLASSIFICATION SCHEMES TO COVER THE TRANSITION PERIOD UNTIL FULL IMPLEMENTATION OF THE GLOBALLY HARMONISED CASSIFICATION SYSTEM (GHS)**

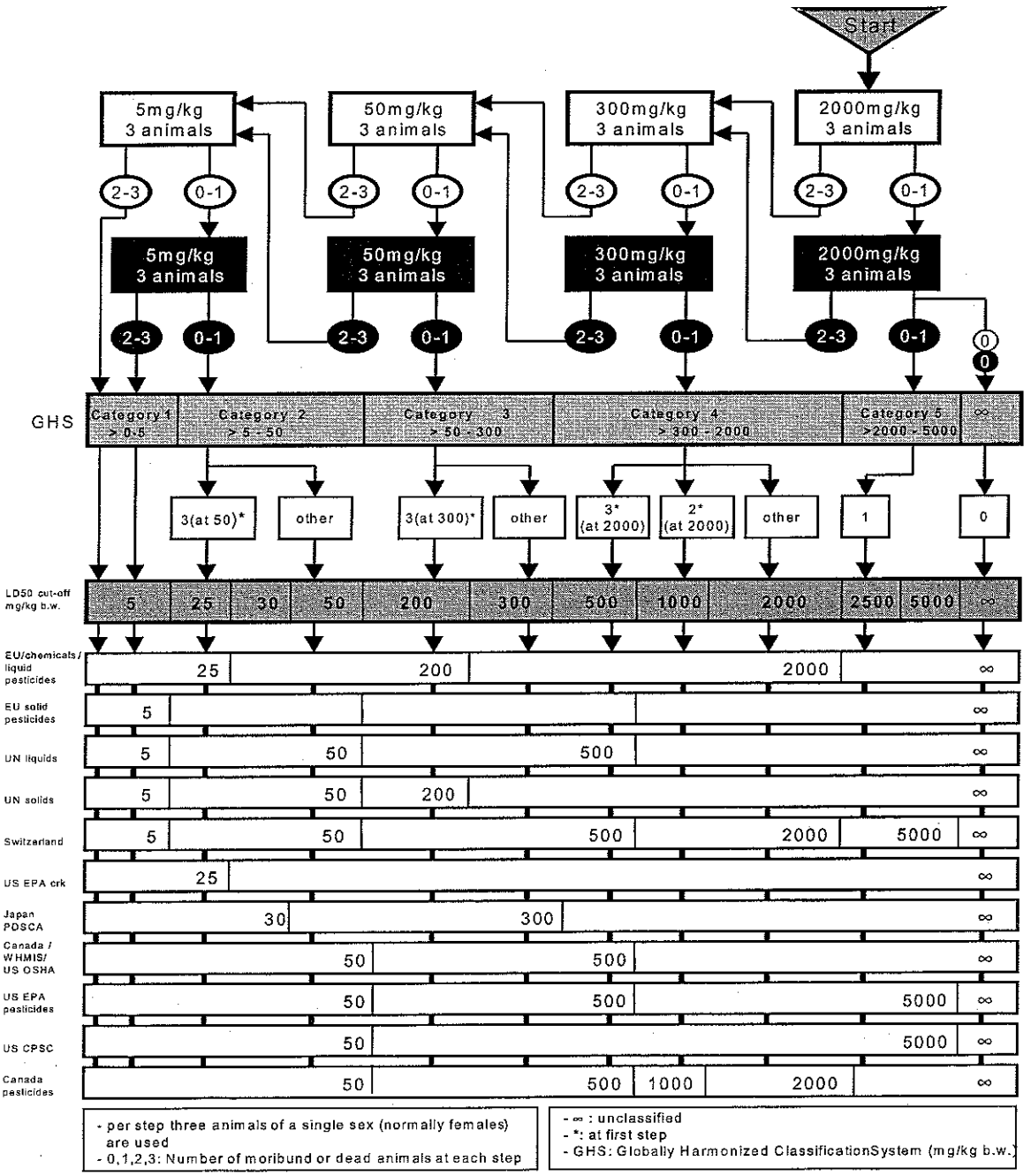

## ANNEX 3

## STATISTICAL BASIS FOR ESTIMATING ACUTE ORAL TOXICITY COMPARISON OF OECD GUIDELINES 420, 423 AND 425

### INTRODUCTION

1. This document describes the statistical strengths and limitations of the various methods for accurately determining a point estimate of the $LD_{50}$, confidence limits around the point estimate of $LD_{50}$, and information on the dose-effect response. In this context, a dose-response curve applies to the estimation of lethality and a dose-effect response applies to the estimation of the change in the variety and distribution of all other types of toxicological signs with the change in dose. By design not all of the guidelines will provide estimates for all of these endpoints. This document allows the reader to quickly identify the tests that will meet his or her particular needs.

2. The statistical basis for all test methods is that lethality is a quantal response. Its measurement will give rise to a frequency distribution of responses reflecting the composite tolerances of the test population upon exposure to graded doses of the test chemical. In practice, most chemicals give rise to an approximately lognormal distribution of deaths versus dose, skewed toward hypersensitivity. When this frequency population is transformed to a logarithmic abscissa, a (symmetric) normal distribution generally results that can be characterized by two parameters, the median and the standard deviation, SD. The median is the dose at which 50% of the animals are killed by the test chemical and is called the $LD_{50}$. Not all animals will react in the same way to the chemical and thus SD represents the square root of the variance of the test populations' response to the chemical. The dose-response curve is sigmoidal in nature and represents the cumulative response of the test animals to the chemical. The inflection point of this sigmoidal curve coincides with the $LD_{50}$ for the test population.

3. What follows is a brief description of the mathematical and biological principles underlying each acute oral toxicity method followed by a listing of how each test estimates or does not estimate the specific parameters mentioned above.

### GUIDELINE 420 :FIXED DOSE PROCEDURE

#### Principles Underlying The Test Method

4. The Fixed Dose Procedure (FDP) is a method for assessing acute oral toxicity that involves the identification of a dose level that causes evidence of non-lethal toxicity (termed *evident* toxicity) rather than a dose level that causes lethality. *Evident toxicity* is a general term describing clear signs of toxicity following administration of test substance, such that an increase to the next highest fixed dose would be expected to result in the development of severe toxic signs and probably mortality.

5. Underpinning the FDP is a belief that the toxic profile of a substance can be characterized with sufficient reliability for most regulatory situations without the need for the identification of a lethal dose. That is, observations made at non-lethal doses will allow substances to be ranked, or classified, according to their acute toxicity, provide information to aid dose level selection for repeat dose studies and provide hazard data for use in a risk assessment. The original FDP was subject to a number of validation and comparison studies, which showed that classification outcome was similar to that based on the outcome of traditional tests for determining an $LD_{50}$ value (1)(2)(3)(4)(5).

6. Fixed dose levels of 5, 50, 300 and 2000 mg/kg and rules for the sequential procedure were adopted following a rigorous analysis using a statistical model (6)(7). The analysis predicted the classification outcome (according to the EU scheme and the lethality-based GHS), numbers of animals used and number of substance-related deaths using a number of FDP design options for substances with a range of $LD_{50}$ values and dose response slopes for lethality. On the basis of this analysis, the design of the FDP was optimised with respect to classification performance and animal welfare.

7. The statistical modelling showed that the FDP produces classification outcomes similar to that based on the $LD_{50}$ value for substances with a steep (greater than 2) dose response curve for mortality. For substances with a relatively shallow (less than 2) dose response curve there is an increasing probability the FDP will produce a more stringent classification than that based on the $LD_{50}$ value; however, the risk of a less stringent classification than that based on the $LD_{50}$ value is negligible. The influence of the choice of starting dose on the classification outcome, which can be a problem with sequential procedures, is negligible.

**Point Estimate of $LD_{50}$**

8. The FDP is not designed to determine a point estimate of $LD_{50}$. However, an approximate $LD_{50}$ range can be inferred from the classification outcome. The ability of the FDP to correctly classify (i.e. assign to an $LD_{50}$ range) is discussed above.

**Confidence Limits on the Estimate of $LD_{50}$**

9. The FDP is not designed to determine a point estimate of $LD_{50}$, or confidence limits on the estimate of the $LD_{50}$.

**Dose-Effect Curve**

10. Since lethality is not the preferred endpoint for the FDP, information on toxicological effects seen only at dose levels close to a lethal dose will not always be available. However, it has been shown in a number of validation and comparative studies (1)(2)(3)(4)(5)(6) that while there were instances where clinical signs observed in FDP tests differed from those observed in traditional $LD_{50}$ tests, in only a few cases were these meaningful. In the majority of cases, the clinical signs not observed in the FDP tests were non-specific signs of approaching death.

## GUIDELINE 423 : ACUTE TOXIC CATEGORY METHOD

**Principles Underlying The Test Method**

11. The acute toxic category (ATC) method allows for the allocation of chemical substances to all classification systems currently in use (e.g.. the $LD_{50}$ is between 50 and 500 mg/kg body weight) (8)(9). It is a group sequential procedure using three animals of one sex per step. Four pre-identified starting doses are possible.

12. The ATC Method is based on the probit model; i.e., the dose-response relationship follows the Gaussian distribution for log-dose values with two parameters, the mean ($LD_{50}$) and the slope in probit units based on the log-scaled dose-axis (logarithm according to base 10). Then, following the test scheme of the method, expected probabilities of a correct, of a lower and of a more stringent classification in dependence on the true oral $LD_{50}$ value of a substance and its slope can be derived.

13. The test doses were selected with respect to the Globally Harmonized Classification system. It

has been shown that the probabilities of correct classification is greatest when test doses and category limits are identical. The minimal distance factor between two neighboring toxic classes has to be 4 for slopes of at least 1 to achieve a probability of correct classification of at least 0.5 for at least one $LD_{50}$ value in each category. For a slope of at least 1 the probability of an allocation to a lower than correct toxic category is limited to 0.256.

14. There is only a low dependence on the starting dose with respect to classification results, especially for slopes of greater than 1. With increasing slopes or increasing $LD_{50}$ values this influence decreases and tends toward zero for an unlimited increase of slope or $LD_{50}$. Also for infinitely low values of $LD_{50}$ the influence becomes zero.

15. There is a strong dependence on the starting dose with respect to expected numbers of animals used and of moribund/dead animals. Therefore an appropriate starting dose should be near the true $LD_{50}$ of the substance to be tested to minimise the number of animals used.

**Point estimate of $LD_{50}$**

16. The ATC was not designed to determine a point estimate of $LD_{50}$. However, a point estimate of the $LD_{50}$ can be calculated by the maximum likelihood method providing there are at least two doses with mortality rates not equal to 0% or 100%. However, the probability of two such doses is rather low because the distance between two neighboring doses is 6- to 10-fold and up to six animals per dose are used (10).

**Confidence Limits On The Estimate Of $LD_{50}$**

17. The ATC was not designed to determine a point estimate of $LD_{50}$, or confidence limits. Providing there are at least three doses, two of which have mortality rates not equal to 0% or 100%, the maximum likelihood method can be used to calculate and broad confidence limits on the estimated $LD_{50}$.

**Dose-Effect Curve**

18. The ATC was not designed to determine a dose-effect curve for the $LD_{50}$. However, dose-effect curves can be calculated by the maximum likelihood method providing there are at least three doses, two with the specific toxic signs not present in 0% or 100% of the animals.

## GUIDELINE 425:UP-AND-DOWN METHOD

**Principles Underlying the Test Method**

19. The concept of the up-and-down (UDP) testing approach (sometimes called a Staircase Design) was first described by Dixon and Mood (11)(12). There have been papers on such issues as its use with small samples (13) and its use with multiple animals per dose (14). One of the most extensive discussions appears in a draft monograph prepared by W. Dixon and Dixon Statistical Associates for a U.S. National Institutes of Health [NIH] Phase I Final Report, Reduction in Vertebrate Animal Use in Research, produced under SBIR Grant No. 1-R43-RR06151-01(15). This draft monograph is available from its author for a fee or from the National Center for Research Resources of the NIH to individuals under the Freedom of Information Act.

20. In 1985, Bruce proposed the use of the UDP for the determination of acute toxicity of chemicals (16). While there exist several variations of the up-and-down experimental design, Guideline 425 is a modification of the procedure of Bruce as adopted by ASTM in 1987 (17). The guideline provides a main

test, for $LD_{50}$ point estimation and a computational procedure, used together with the main test to calculate confidence intervals. The UDP calls for dosing individual animals of a single sex, usually females, in sequence at 48-hour intervals, with the initial dose set just below "the toxicologist's best estimate of the $LD_{50}$," or at 175 mg/kg if no such estimate is possible. Following each death (or moribund state) the dose is lowered; following each survival, it is increased, according to a pre-specified dose progression factor. If a death follows an initial direction of increasing doses, or a survival follows an initial direction of decreasing dose, additional animals are tested following the same dose adjustment pattern and testing is ended if certain criteria are met. The OECD 425 protocol calls for a default dose progression factor of 3.2 and default s for maximum likelihood calculations of 0.5 (i.e., log(3.2)). Dosing levels and calculation details are provided in the guideline.

**Point Estimate of the $LD_{50}$**

21. From the data a point estimate of the $LD_{50}$ is calculated using the maximum likelihood method (18)(19).

**Confidence Limits On The Estimate Of $LD_{50}$**

22. Confidence limits around the $LD_{50}$ value can be calculated using the maximum likelihood method (18)(19), provided a suitable historical or other sound estimate of the standard deviation can be employed. A computational procedure based on profile likelihoods can provide confidence limits for the $LD_{50}$ when no prior estimate of the standard deviation is available. The procedure identifies bounds for $LD_{50}$ from a ratio of likelihood functions optimized over *sigma* (profile likelihoods). Procedures are also included for certain circumstances where no intermediate doses exist (for instance, when testing has proceeded through a wide range of doses with no reversal or where doses are so widely spaced that each animal provides a reversal).

**Dose-Effect Curve**

23. A dose effect curve can be calculated using a two parameter probit model provided that the response is quantal and there is an overlapping of the range of doses that result in a positive and negative response.

**REFERENCES TO ANNEX 3**

(1) Van den Heuvel, M J, D G Clark, R J Fielder, P P Koundakjian, G J A Oliver, D Pelling, N J Tomlinson, and A P Walker (1990). The international validation of a fixed-dose procedure as an alternative to the classical LD50 test. Fd. Chem. Toxicol., 28:469-482.

(2)` British Toxicology Society (1984). Special report: a new approach to the classification of substances and preparations on the basis of their acute toxicity. Human Toxicol., 3:85-92.

(3) Van den Heuval, M J, A D Dayan and R O Shillaker (1987). Evaluation of the BTS approach to the testing of substances and preparations for their acute toxicity. Human Toxicol., 6:279-291.

(4) Lipnick, R L, J A Cotruvo, R N Hill, R D Bruce, K A Stitzel, A P Walker, I Chu, M Goddard, L Segal, J A Springer, and R C Myers (1995). Comparison of the Up-and-Down, Conventional LD50, and Fixed-Dose Acute Toxicity Procedures. Fd Chem. Toxic. 33: 223-231.

(5) Yam, J, P J Reer, and R D Bruce (1991). Comparison of the Up-and-Down Method and the

Fixed-Dose Procedure for Acute Oral Toxicity Testing. Fd Chem. Toxic. 29:259-263.

(6) Stallard N and A Whitehead (1995). Reducing numbers in the fixed-dose procedure. Human Expt. Toxicol., 14:315-323.

(7) Stallard N, A Whitehead and P Ridgway (2000). Statistical evaluation of modifications to the fixed dose procedure (manuscript in preparation).

(8) Diener, W; U Mischke, E Schlede and D Kayser (1995). The biometric evaluation of the OECD modified version of the acute toxic category method (oral). Arch.Toxicol. 69: 729-734.

(9) Schlede, E; U Mischke, W Diener and D Kayser (1995). The international validation study of the acute-toxic-category method (oral). Arch.Toxicol. 69: 659-670.

(10) Diener, W; L Siccha, U Mischke, D Kayser and E Schlede (1994). The biometric evaluation of the acute-toxic-category method (oral). Arch.Toxicol. 68: 599-610.

(11) Dixon, W J, and A M Mood (1948). A method for obtaining and analyzing sensitivity data. J. Amer. Statist. Assoc. 43:109-126.

(12) Dixon, W J (1991). Staircase Bioassay: The Up-and-Down Method. Neurosci. Biobehav. Rev. 15:47-50.

(13) Brownlee, K A , J L Hodges, Jr., and M Rosenblatt (1953). J Amer. Stat. Assoc., 48:262-277.

(14) Hsi, B P (1969). J Amer. Stat. Assoc., 64:147-162.

(15) Dixon, W J (1991). Design and Analysis of Quantal Dose-Response Experiments (with Emphasis on Staircase Designs). Dixon Statistical Associates, Los Angeles CA, USA.[discussion paper prepared for a US NIH Phase 1 Final Report: Reduction in Vertabrate Animal Use in Research , produced under SBIR Grant N° 1R43-RR06151-01].

(16) Bruce, R D (1985). An up-and-down procedure for acute toxicity testing. Fundam. Appl. Tox., 5:151-157.

(17) ASTM (1987) E 1163-87, Standard test method for estimating acute oral toxicity in rats. American Society for Testing Materials, Philadelphia PA, USA.

(18) Dixon, W J (1965). The up-and down method for small samples. J. Amer. Statist. Assoc., 60:967-978.

(19) Finney, D J (1971). Probit Analysis, 3rd ed., Cambridge University Press, Cambridge, England, 50-80.

# Appendix N

## UDP/ATC Simulation Modeling Results

**N1 UDP Simulation Results Using Starting Doses One Default Dose Lower than the $LD_{50}$ Predicted by the 3T3 and NHK NRU $IC_{50}$ and the RC Rat-Only Millimole Regression - 5000 mg/kg Upper Limit Dose ..... N-3**

**N2 UDP Simulation Results Using Starting Doses One Default Dose Lower than the $LD_{50}$ Predicted by the 3T3 and NHK NRU $IC_{50}$ and the RC Rat-Only Weight Regression - 5000 mg/kg Upper Limit Dose ..... N-13**

**N3 ATC Simulation Results Starting at the Next Fixed Dose Below the $LD_{50}$ Predicted by the 3T3 and NHK NRU $IC_{50}$ and the RC Rat-Only Millimole Regression - 2000 mg/kg Upper Limit Dose ..... N-23**

**N4 ATC Simulation Results Starting at the Next Fixed Dose Below the $LD_{50}$ Predicted by the 3T3 and NHK NRU $IC_{50}$ and the RC Rat-Only Weight Regression - 2000 mg/kg Upper Limit Dose ..... N-33**

***[This Page Intentionally Left Blank]***

# Appendix N1

## UDP Simulation Results Using Starting Doses One Default Dose Lower than the $LD_{50}$ Predicted by the 3T3 and NHK NRU $IC_{50}$ and the RC Rat-Only Millimole Regression - 5000 mg/kg Upper Limit Dose

***[This Page Intentionally Left Blank]***

## Summary of Animals Used and Animals Dead for UDP Simulations by NRU Test Method[1]

| NRU Test Method | Sigma | Starting Dose | Animals Used | | | | Animals Died | | | | % Savings - Animals Used | % Difference - Animals Died |
|---|---|---|---|---|---|---|---|---|---|---|---|---|
| | | | Std. Error | Number[2] | Difference[3] | P[4] | Std. Error | Number[2] | Difference[3] | P[4] | | |
| 3T3 | 0.12 | Cyto | 0.196 | 7.42 | 0.53 | 0.0002 | 0.204 | 3.43 | 0.00 | 0.6675 | 6.6% | 0.1% |
| | | Default | 0.176 | 7.95 | | | 0.200 | 3.44 | | | | |
| | 0.25 | Cyto | 0.189 | 8.15 | 0.52 | 0.0005 | 0.203 | 3.76 | 0.00 | 0.9311 | 6.0% | 0.1% |
| | | Default | 0.178 | 8.68 | | | 0.197 | 3.76 | | | | |
| | 0.50 | Cyto | 0.169 | 8.80 | 0.54 | 0.0008 | 0.191 | 4.09 | 0.02 | 0.6341 | 5.8% | 0.5% |
| | | Default | 0.163 | 9.35 | | | 0.185 | 4.11 | | | | |
| | 1.25 | Cyto | 0.135 | 9.34 | 0.61 | 0.0001 | 0.165 | 4.48 | 0.07 | 0.0238 | 6.1% | 1.5% |
| | | Default | 0.131 | 9.95 | | | 0.152 | 4.55 | | | | |
| | 2.00 | Cyto | 0.112 | 9.48 | 0.53 | 0.0003 | 0.145 | 4.60 | 0.07 | 0.0506 | 5.3% | 1.5% |
| | | Default | 0.096 | 10.01 | | | 0.129 | 4.67 | | | | |
| | | | Average Difference | | 0.55 | | Average Difference | | 0.03 | | | |
| NHK | 0.12 | Cyto | 0.203 | 7.43 | 0.49 | 0.0003 | 0.215 | 3.39 | -0.01 | 0.7372 | 6.2% | -0.2% |
| | | Default | 0.176 | 7.92 | | | 0.202 | 3.39 | | | | |
| | 0.25 | Cyto | 0.197 | 8.18 | 0.48 | 0.0005 | 0.212 | 3.72 | 0.00 | 0.3125 | 5.6% | -0.1% |
| | | Default | 0.174 | 8.66 | | | 0.198 | 3.72 | | | | |
| | 0.50 | Cyto | 0.176 | 8.86 | 0.50 | 0.0006 | 0.199 | 4.07 | 0.01 | 0.2841 | 5.3% | 0.2% |
| | | Default | 0.157 | 9.36 | | | 0.183 | 4.08 | | | | |
| | 1.25 | Cyto | 0.145 | 9.41 | 0.55 | 0.0002 | 0.173 | 4.48 | 0.04 | 0.0129 | 5.5% | 1.0% |
| | | Default | 0.125 | 9.96 | | | 0.150 | 4.52 | | | | |
| | 2.00 | Cyto | 0.121 | 9.53 | 0.49 | 0.0001 | 0.151 | 4.61 | 0.05 | 0.0206 | 4.9% | 1.1% |
| | | Default | 0.092 | 10.01 | | | 0.127 | 4.66 | | | | |
| | | | Average Difference | | 0.50 | | Average Difference | | 0.02 | | | |

Abbreviations: UDP=Up-and-Down Procedure (OECD 2001a, EPA 2002a); NRU=Neutral red uptake; Sigma=Reciprocal of dose-mortality slope; Cyto=NRU-determined starting dose (i.e., one dose lower than the $LD_{50}$ predicted by the NRU $IC_{50}$ in the RC rat-only millimole regression (log $LD_{50}$ [mmol/kg] = 0.439 log $IC_{50}$ [mM] + 0.621); Default=Default starting dose of 175 mg/kg; Std. Error=Standard error for number of animals; 3T3= BALB/c 3T3 mouse fibroblasts; NHK=Normal human epidermal keratinocytes; RC=Registry of Cytotoxicity..

[1]For 10,000 UDP simulations at each starting dose and dose-mortality slope for 67 substances in the 3T3 NRU test method and 68 substances in the NHK NRU test method. Upper limit dose =5000 mg/kg.

[2]Mean number of animals for 10,000 simulations.

[3]Difference between mean number of animals for the default starting dose and mean number of animals for the NRU-based starting dose.

[4]P-value is from one-sided Wilcoxon signed rank test for difference in animals between the default and NRU-based starting doses. Significant values at $p < 0.05$.

## Summary of Stopping Rules Used for the UDP Simulations by NRU Test Method[1]

| NRU Test Method | Sigma | Starting Dose | 3 Animals at Limit Dose[2] | 5 Reversals[2] | Likelihood Ratio[2] | Maximum Number of Animals Used[2] |
|---|---|---|---|---|---|---|
| 3T3 | 0.12 | Cyto | 15.6% | 56.0% | 26.4% | 2.0% |
| | | Default | 15.4% | 56.9% | 25.3% | 2.4% |
| | 0.25 | Cyto | 15.0% | 33.6% | 47.4% | 4.0% |
| | | Default | 14.7% | 34.1% | 46.0% | 5.3% |
| | 0.5 | Cyto | 13.4% | 19.8% | 59.0% | 7.8% |
| | | Default | 13.0% | 20.0% | 57.3% | 9.7% |
| | 1.25 | Cyto | 9.8% | 13.5% | 64.0% | 12.7% |
| | | Default | 9.1% | 13.6% | 60.9% | 16.4% |
| | 2 | Cyto | 8.5% | 12.3% | 65.2% | 14.0% |
| | | Default | 7.4% | 12.5% | 62.6% | 17.5% |
| NHK | 0.12 | Cyto | 16.8% | 55.3% | 26.0% | 1.8% |
| | | Default | 16.6% | 56.0% | 25.0% | 2.4% |
| | 0.25 | Cyto | 16.1% | 33.3% | 46.5% | 4.1% |
| | | Default | 15.8% | 33.5% | 45.5% | 5.2% |
| | 0.5 | Cyto | 14.3% | 19.7% | 58.0% | 8.1% |
| | | Default | 13.8% | 19.9% | 56.6% | 9.7% |
| | 1.25 | Cyto | 10.1% | 13.5% | 63.1% | 13.3% |
| | | Default | 9.5% | 13.5% | 60.4% | 16.5% |
| | 2 | Cyto | 8.6% | 12.3% | 64.6% | 14.5% |
| | | Default | 7.6% | 12.5% | 62.3% | 17.6% |

Abbreviations: UDP=Up-and-Down Procedure (OECD 2001a, EPA 2002a); NRU=Neutral red uptake; Sigma=Reciprocal of dose-mortality slope; Cyto=NRU-determined starting dose (i.e., one dose lower than the $LD_{50}$ predicted by the NRU $IC_{50}$ in the RC rat-only millimole regression (log $LD_{50}$ [mmol/kg] = 0.439 log $IC_{50}$ [mM] + 0.621); Default=Default starting dose of 175 mg/kg; 3T3= BALB/c 3T3 mouse fibroblasts; NHK=Normal human epidermal keratinocytes; RC=Registry of Cytotoxicity.

[1]For 10,000 UDP simulations at each starting dose and dose-mortality slope for 67 substances in the 3T3 NRU test method and 68 substances in the NHK NRU test method. Upper limit dose =5000 mg/kg.

[2]Percentage of the 10,000 test simulations that satisfied the specified condition for completion of testing (see OECD [2001a]; EPA [2002a]).

## Summary of Animals Used and Animals Dead for UDP Simulations by GHS Toxicity Category and NRU Test Method[1]

| Toxcat | NRU Test Method | Sigma | Starting Dose | Animals Used | | | | Animals Died | | | | % Savings - Animals Used | % Difference - Animals Died |
|---|---|---|---|---|---|---|---|---|---|---|---|---|---|
| | | | | Std. Error | Number[2] | Difference[3] | P[4] | Std. Error | Number[2] | Difference[3] | P[4] | | |
| 1 | 3T3 | 0.12 | Cyto | 0.431 | 8.74 | 0.96 | 0.6250 | 0.459 | 5.58 | 0.81 | 0.6250 | 9.9% | 12.7% |
| | | | Default | 0.277 | 9.70 | | | 0.170 | 6.39 | | | | |
| | | 0.25 | Cyto | 0.660 | 9.56 | 1.02 | 0.6250 | 0.581 | 6.06 | 0.84 | 0.6250 | 9.7% | 12.2% |
| | | | Default | 0.179 | 10.58 | | | 0.155 | 6.90 | | | | |
| | | 0.50 | Cyto | 0.697 | 10.19 | 1.14 | 0.6250 | 0.609 | 6.46 | 0.91 | 0.6250 | 10.0% | 12.3% |
| | | | Default | 0.201 | 11.32 | | | 0.197 | 7.37 | | | | |
| | | 1.25 | Cyto | 0.664 | 10.68 | 1.07 | 0.6250 | 0.598 | 6.70 | 0.87 | 0.6250 | 9.1% | 11.5% |
| | | | Default | 0.156 | 11.75 | | | 0.169 | 7.57 | | | | |
| | | 2.00 | Cyto | 0.548 | 10.65 | 0.82 | 0.6250 | 0.506 | 6.54 | 0.71 | 0.6250 | 7.1% | 9.8% |
| | | | Default | 0.146 | 11.47 | | | 0.152 | 7.24 | | | | |
| | | | | Average Difference | | 1.00 | | Average Difference | | 0.83 | | | |
| | NHK | 0.12 | Cyto | 0.516 | 8.95 | 0.71 | 0.3750 | 0.531 | 5.79 | 0.58 | 0.3750 | 7.3% | 9.1% |
| | | | Default | 0.268 | 9.66 | | | 0.169 | 6.37 | | | | |
| | | 0.25 | Cyto | 0.699 | 9.77 | 0.77 | 0.3750 | 0.626 | 6.26 | 0.61 | 0.3750 | 7.3% | 8.9% |
| | | | Default | 0.217 | 10.53 | | | 0.177 | 6.87 | | | | |
| | | 0.50 | Cyto | 0.707 | 10.47 | 0.75 | 0.3750 | 0.638 | 6.69 | 0.63 | 0.3750 | 6.7% | 8.6% |
| | | | Default | 0.241 | 11.21 | | | 0.224 | 7.31 | | | | |
| | | 1.25 | Cyto | 0.692 | 10.92 | 0.78 | 0.3750 | 0.636 | 6.91 | 0.65 | 0.3750 | 6.7% | 8.6% |
| | | | Default | 0.169 | 11.70 | | | 0.179 | 7.56 | | | | |
| | | 2.00 | Cyto | 0.627 | 10.81 | 0.66 | 0.3750 | 0.578 | 6.70 | 0.53 | 0.3750 | 5.7% | 7.4% |
| | | | Default | 0.159 | 11.47 | | | 0.157 | 7.24 | | | | |
| | | | | Average Difference | | 0.73 | | Average Difference | | 0.60 | | | |
| 2 | 3T3 | 0.12 | Cyto | 0.467 | 8.54 | -0.08 | 0.8926 | 0.426 | 5.16 | -0.05 | 0.9460 | -1.0% | -1.0% |
| | | | Default | 0.278 | 8.46 | | | 0.239 | 5.11 | | | | |
| | | 0.25 | Cyto | 0.426 | 9.21 | -0.13 | 0.8926 | 0.404 | 5.54 | -0.07 | 0.9460 | -1.4% | -1.3% |
| | | | Default | 0.210 | 9.08 | | | 0.202 | 5.47 | | | | |
| | | 0.50 | Cyto | 0.453 | 9.74 | -0.07 | 1.0000 | 0.417 | 5.83 | -0.06 | 1.0000 | -0.7% | -1.0% |
| | | | Default | 0.230 | 9.68 | | | 0.211 | 5.77 | | | | |
| | | 1.25 | Cyto | 0.413 | 10.25 | -0.08 | 0.9460 | 0.394 | 6.06 | -0.09 | 0.8926 | -0.8% | -1.5% |
| | | | Default | 0.236 | 10.17 | | | 0.218 | 5.97 | | | | |
| | | 2.00 | Cyto | 0.328 | 10.34 | -0.14 | 0.5879 | 0.335 | 6.01 | -0.10 | 0.7354 | -1.4% | -1.8% |
| | | | Default | 0.177 | 10.20 | | | 0.178 | 5.91 | | | | |
| | | | | Average Difference | | -0.10 | | Average Difference | | -0.07 | | | |
| | NHK | 0.12 | Cyto | 0.488 | 8.77 | -0.33 | 0.3757 | 0.476 | 5.26 | -0.15 | 0.5879 | -3.9% | -3.0% |
| | | | Default | 0.260 | 8.43 | | | 0.232 | 5.11 | | | | |
| | | 0.25 | Cyto | 0.428 | 9.44 | -0.36 | 0.4143 | 0.444 | 5.64 | -0.17 | 0.6848 | -4.0% | -3.1% |
| | | | Default | 0.166 | 9.08 | | | 0.187 | 5.46 | | | | |
| | | 0.50 | Cyto | 0.448 | 9.99 | -0.34 | 0.3757 | 0.453 | 5.94 | -0.18 | 0.5417 | -3.5% | -3.2% |
| | | | Default | 0.164 | 9.65 | | | 0.185 | 5.75 | | | | |
| | | 1.25 | Cyto | 0.424 | 10.46 | -0.32 | 0.3396 | 0.440 | 6.16 | -0.21 | 0.4973 | -3.2% | -3.5% |
| | | | Default | 0.183 | 10.14 | | | 0.196 | 5.95 | | | | |
| | | 2.00 | Cyto | 0.348 | 10.49 | -0.32 | 0.4143 | 0.381 | 6.09 | -0.20 | 0.5417 | -3.1% | -3.4% |
| | | | Default | 0.148 | 10.18 | | | 0.166 | 5.89 | | | | |
| | | | | Average Difference | | -0.33 | | Average Difference | | -0.18 | | | |

## Summary of Animals Used and Animals Dead for UDP Simulations by GHS Toxicity Category and NRU Test Method[1]

| Toxcat | NRU Test Method | Sigma | Starting Dose | Animals Used | | | | Animals Died | | | | % Savings - Animals Used | % Difference - Animals Died |
|---|---|---|---|---|---|---|---|---|---|---|---|---|---|
| | | | | Std. Error | Number[2] | Difference[3] | P[4] | Std. Error | Number[2] | Difference[3] | P[4] | | |
| 3 | 3T3 | 0.12 | Cyto | 0.189 | 6.90 | -0.29 | 0.0425 | 0.149 | 3.60 | -0.23 | 0.0522 | -4.3% | -6.8% |
| | | | Default | 0.188 | 6.61 | | | 0.125 | 3.37 | | | | |
| | | 0.25 | Cyto | 0.220 | 7.53 | -0.33 | 0.0522 | 0.169 | 3.96 | -0.24 | 0.0640 | -4.6% | -6.6% |
| | | | Default | 0.152 | 7.20 | | | 0.103 | 3.71 | | | | |
| | | 0.50 | Cyto | 0.213 | 8.18 | -0.42 | 0.0522 | 0.163 | 4.31 | -0.27 | 0.0640 | -5.5% | -6.7% |
| | | | Default | 0.101 | 7.76 | | | 0.080 | 4.04 | | | | |
| | | 1.25 | Cyto | 0.141 | 8.98 | -0.35 | 0.0522 | 0.123 | 4.69 | -0.22 | 0.0771 | -4.1% | -4.9% |
| | | | Default | 0.059 | 8.62 | | | 0.057 | 4.47 | | | | |
| | | 2.00 | Cyto | 0.084 | 9.33 | -0.23 | 0.0522 | 0.094 | 4.85 | -0.15 | 0.2036 | -2.5% | -3.3% |
| | | | Default | 0.040 | 9.10 | | | 0.050 | 4.70 | | | | |
| | | | | Average Difference | | -0.33 | | Average Difference | | -0.22 | | | |
| | NHK | 0.12 | Cyto | 0.190 | 6.85 | -0.28 | 0.1514 | 0.133 | 3.52 | -0.16 | 0.2334 | -4.2% | -4.9% |
| | | | Default | 0.190 | 6.57 | | | 0.127 | 3.35 | | | | |
| | | 0.25 | Cyto | 0.229 | 7.48 | -0.31 | 0.0425 | 0.152 | 3.86 | -0.17 | 0.1099 | -4.4% | -4.6% |
| | | | Default | 0.159 | 7.17 | | | 0.106 | 3.69 | | | | |
| | | 0.50 | Cyto | 0.206 | 8.12 | -0.34 | 0.0923 | 0.143 | 4.20 | -0.16 | 0.2036 | -4.4% | -4.1% |
| | | | Default | 0.109 | 7.78 | | | 0.082 | 4.04 | | | | |
| | | 1.25 | Cyto | 0.120 | 8.93 | -0.28 | 0.0522 | 0.108 | 4.60 | -0.12 | 0.4697 | -3.2% | -2.6% |
| | | | Default | 0.061 | 8.65 | | | 0.060 | 4.48 | | | | |
| | | 2.00 | Cyto | 0.079 | 9.31 | -0.20 | 0.0923 | 0.088 | 4.77 | -0.07 | 0.7334 | -2.2% | -1.5% |
| | | | Default | 0.036 | 9.11 | | | 0.048 | 4.70 | | | | |
| | | | | Average Difference | | -0.28 | | Average Difference | | -0.14 | | | |
| 4 | 3T3 | 0.12 | Cyto | 0.191 | 7.15 | 0.31 | 0.0443 | 0.063 | 3.39 | 0.01 | 0.9399 | 4.1% | 0.2% |
| | | | Default | 0.235 | 7.46 | | | 0.066 | 3.40 | | | | |
| | | 0.25 | Cyto | 0.186 | 7.66 | 0.28 | 0.0507 | 0.032 | 3.61 | -0.003 | 0.2522 | 3.5% | -0.1% |
| | | | Default | 0.201 | 7.94 | | | 0.048 | 3.60 | | | | |
| | | 0.50 | Cyto | 0.210 | 8.14 | 0.38 | 0.1046 | 0.040 | 3.80 | 0.05 | 0.1591 | 4.5% | 1.4% |
| | | | Default | 0.212 | 8.53 | | | 0.049 | 3.86 | | | | |
| | | 1.25 | Cyto | 0.180 | 8.82 | 0.33 | 0.0250 | 0.049 | 4.10 | 0.03 | 0.0934 | 3.6% | 0.8% |
| | | | Default | 0.145 | 9.16 | | | 0.022 | 4.13 | | | | |
| | | 2.00 | Cyto | 0.133 | 9.16 | 0.22 | 0.0577 | 0.042 | 4.26 | -0.01 | 0.8603 | 2.3% | -0.2% |
| | | | Default | 0.084 | 9.38 | | | 0.019 | 4.25 | | | | |
| | | | | Average Difference | | 0.31 | | Average Difference | | 0.02 | | | |
| | NHK | 0.12 | Cyto | 0.196 | 7.00 | 0.49 | 0.0073 | 0.064 | 3.36 | 0.06 | 0.1439 | 6.5% | 1.7% |
| | | | Default | 0.247 | 7.49 | | | 0.071 | 3.42 | | | | |
| | | 0.25 | Cyto | 0.213 | 7.53 | 0.45 | 0.0131 | 0.036 | 3.58 | 0.05 | 0.0577 | 5.6% | 1.4% |
| | | | Default | 0.207 | 7.97 | | | 0.048 | 3.63 | | | | |
| | | 0.50 | Cyto | 0.234 | 8.03 | 0.52 | 0.0335 | 0.041 | 3.78 | 0.09 | 0.0654 | 6.1% | 2.4% |
| | | | Default | 0.221 | 8.55 | | | 0.052 | 3.88 | | | | |
| | | 1.25 | Cyto | 0.218 | 8.76 | 0.41 | 0.0182 | 0.051 | 4.10 | 0.04 | 0.1297 | 4.5% | 1.1% |
| | | | Default | 0.147 | 9.17 | | | 0.023 | 4.14 | | | | |
| | | 2.00 | Cyto | 0.163 | 9.12 | 0.27 | 0.0443 | 0.042 | 4.28 | -0.02 | 0.8999 | 2.9% | -0.4% |
| | | | Default | 0.086 | 9.40 | | | 0.018 | 4.26 | | | | |
| | | | | Average Difference | | 0.43 | | Average Difference | | 0.05 | | | |

## Summary of Animals Used and Animals Dead for UDP Simulations by GHS Toxicity Category and NRU Test Method[1]

| Toxcat | NRU Test Method | Sigma | Starting Dose | Animals Used | | | | Animals Died | | | | % Savings - Animals Used | % Difference - Animals Died |
|---|---|---|---|---|---|---|---|---|---|---|---|---|---|
| | | | | Std. Error | Number[2] | Difference[3] | P[4] | Std. Error | Number[2] | Difference[3] | P[4] | | |
| 5 | 3T3 | 0.12 | Cyto | 0.308 | 7.96 | 1.21 | 0.0020 | 0.042 | 3.25 | 0.06 | 0.0137 | 13.2% | 1.7% |
| | | | Default | 0.232 | 9.17 | | | 0.034 | 3.30 | | | | |
| | | 0.25 | Cyto | 0.196 | 9.01 | 1.33 | 0.0039 | 0.049 | 3.46 | 0.11 | 0.0195 | 12.8% | 3.1% |
| | | | Default | 0.157 | 10.34 | | | 0.062 | 3.57 | | | | |
| | | 0.50 | Cyto | 0.148 | 9.46 | 1.28 | 0.0039 | 0.051 | 3.56 | 0.09 | 0.0195 | 11.9% | 2.5% |
| | | | Default | 0.102 | 10.73 | | | 0.059 | 3.65 | | | | |
| | | 1.25 | Cyto | 0.131 | 9.29 | 1.38 | 0.0020 | 0.038 | 3.67 | 0.20 | 0.0020 | 12.9% | 5.2% |
| | | | Default | 0.065 | 10.66 | | | 0.030 | 3.87 | | | | |
| | | 2.00 | Cyto | 0.107 | 9.20 | 1.16 | 0.0039 | 0.032 | 3.78 | 0.18 | 0.0039 | 11.2% | 4.6% |
| | | | Default | 0.061 | 10.36 | | | 0.013 | 3.96 | | | | |
| | | | | Average Difference | | 1.27 | | Average Difference | | 0.13 | | | |
| | NHK | 0.12 | Cyto | 0.285 | 8.06 | 1.11 | 0.0020 | 0.030 | 3.25 | 0.06 | 0.0273 | 12.1% | 1.7% |
| | | | Default | 0.233 | 9.17 | | | 0.038 | 3.31 | | | | |
| | | 0.25 | Cyto | 0.241 | 9.12 | 1.19 | 0.0020 | 0.048 | 3.47 | 0.10 | 0.0273 | 11.5% | 2.8% |
| | | | Default | 0.152 | 10.31 | | | 0.061 | 3.56 | | | | |
| | | 0.50 | Cyto | 0.200 | 9.54 | 1.21 | 0.0020 | 0.046 | 3.55 | 0.10 | 0.0098 | 11.3% | 2.7% |
| | | | Default | 0.082 | 10.75 | | | 0.064 | 3.65 | | | | |
| | | 1.25 | Cyto | 0.167 | 9.40 | 1.27 | 0.0039 | 0.030 | 3.68 | 0.18 | 0.0039 | 11.9% | 4.7% |
| | | | Default | 0.052 | 10.66 | | | 0.037 | 3.86 | | | | |
| | | 2.00 | Cyto | 0.131 | 9.28 | 1.06 | 0.0020 | 0.029 | 3.79 | 0.17 | 0.0020 | 10.3% | 4.2% |
| | | | Default | 0.037 | 10.35 | | | 0.022 | 3.96 | | | | |
| | | | | Average Difference | | 1.17 | | Average Difference | | 0.12 | | | |
| 6 | 3T3 | 0.12 | Cyto | 0.685 | 6.18 | 1.58 | 0.0005 | 0.314 | 0.88 | -0.02 | 0.0923 | 20.3% | -2.8% |
| | | | Default | 0.587 | 7.76 | | | 0.304 | 0.85 | | | | |
| | | 0.25 | Cyto | 0.647 | 7.10 | 1.57 | 0.0005 | 0.316 | 1.33 | -0.03 | 0.0342 | 18.1% | -2.1% |
| | | | Default | 0.541 | 8.67 | | | 0.309 | 1.30 | | | | |
| | | 0.50 | Cyto | 0.486 | 8.29 | 1.58 | 0.0005 | 0.255 | 2.04 | -0.01 | 0.1294 | 16.0% | -0.4% |
| | | | Default | 0.342 | 9.87 | | | 0.255 | 2.03 | | | | |
| | | 1.25 | Cyto | 0.301 | 9.01 | 1.88 | 0.0005 | 0.126 | 3.00 | 0.19 | 0.0005 | 17.3% | 6.0% |
| | | | Default | 0.058 | 10.89 | | | 0.121 | 3.19 | | | | |
| | | 2.00 | Cyto | 0.246 | 8.94 | 1.81 | 0.0005 | 0.088 | 3.33 | 0.28 | 0.0005 | 16.8% | 7.7% |
| | | | Default | 0.030 | 10.75 | | | 0.066 | 3.60 | | | | |
| | | | | Average Difference | | 1.68 | | Average Difference | | 0.08 | | | |
| | NHK | 0.12 | Cyto | 0.630 | 6.19 | 1.47 | 0.0002 | 0.298 | 0.82 | -0.02 | 0.0281 | 19.2% | -3.1% |
| | | | Default | 0.560 | 7.66 | | | 0.289 | 0.80 | | | | |
| | | 0.25 | Cyto | 0.585 | 7.16 | 1.47 | 0.0002 | 0.295 | 1.28 | -0.02 | 0.1099 | 17.0% | -1.7% |
| | | | Default | 0.499 | 8.63 | | | 0.287 | 1.26 | | | | |
| | | 0.50 | Cyto | 0.440 | 8.41 | 1.47 | 0.0002 | 0.236 | 2.03 | -0.01 | 0.0942 | 14.8% | -0.7% |
| | | | Default | 0.317 | 9.87 | | | 0.236 | 2.02 | | | | |
| | | 1.25 | Cyto | 0.276 | 9.14 | 1.73 | 0.0002 | 0.112 | 3.02 | 0.16 | 0.0002 | 16.0% | 5.0% |
| | | | Default | 0.056 | 10.87 | | | 0.114 | 3.18 | | | | |
| | | 2.00 | Cyto | 0.234 | 9.06 | 1.69 | 0.0002 | 0.078 | 3.36 | 0.25 | 0.0002 | 15.7% | 7.0% |
| | | | Default | 0.022 | 10.74 | | | 0.062 | 3.61 | | | | |
| | | | | Average Difference | | 1.56 | | Average Difference | | 0.07 | | | |

Abbreviations: UDP=Up-and-Down Procedure (OECD 2001a, EPA 2002a); Toxcat=Category from Globally Harmonized System of Classification and Labeling of Chemicals[5] (GHS; UN 2005); NRU=Neutral red uptake; Sigma=Reciprocal of dose-mortality slope; Cyto=NRU-determined starting dose (i.e., one dose lower than the $LD_{50}$ predicted by the NRU $IC_{50}$ in the RC rat-only millimole regression (log $LD_{50}$ [mmol/kg] = 0.439 log $IC_{50}$ [mM] + 0.621); Default=Default starting dose of 175 mg/kg; Std. Error=Standard error for number of animals; 3T3= BALB/c 3T3 mouse fibroblasts; NHK=Normal human epidermal keratinocytes; RC=Registry of Cytotoxicity.

[1]For 10,000 UDP simulations at each starting dose and dose-mortality slope for 67 substances in the 3T3 NRU test method and 68 substances in the NHK NRU test method. Upper limit dose =5000 mg/kg.

[1]For 10,000 UDP simulations at each starting dose and dose-mortality slope for 67 substances in the 3T3 NRU test method and 68 substances in the NHK NRU test method. Upper limit dose =5000 mg/kg.

[2]Mean number of animals for 10,000 simulations.

[3]Difference between mean animals used for the default starting dose and mean animals used for the NRU-based starting dose.

[4]P-value is from one-side Wilcoxon signed rank test for difference in animals between the default and NRU-based starting doses. Significant values at $p < 0.05$.

| [5]GHS Toxicity Category | Oral $LD_{50}$ Limits |
|---|---|
| 1 | $LD_{50} \leq 5$ mg/kg |
| 2 | $5 < LD_{50} \leq 50$ mg/kg |
| 3 | $50 < LD_{50} \leq 300$ mg/kg |
| 4 | $300 < LD_{50} \leq 2000$ mg/kg |
| 5 | $2000 < LD_{50} \leq 5000$ mg/kg |
| 6 | $LD_{50} > 5000$ mg/kg |

## Concordance of NRU-Based Starting Dose with Default Starting Dose for GHS Acute Oral Toxicity Category Outcome Based on Simulated UDP $LD_{50}$[1]

| GHS Category Based on $LD_{50}$ Outcome with Default Starting Dose | GHS Category[2] Based on $LD_{50}$ Outcome with NHK NRU-Based Starting Dose | | | | | | | | | |
|---|---|---|---|---|---|---|---|---|---|---|
| | 1 | 2 | 3 | 4 | 5 | 6 | Total | Category Match | Higher NRU Category | Lower NRU Category |
| **1** | 4 | 0 | 0 | 0 | 0 | 0 | 4 | 100% | 0% | 0% |
| **2** | 0 | 13 | 0 | 0 | 0 | 0 | 13 | 100% | 0% | 0% |
| **3** | 0 | 1 | 11 | 0 | 0 | 0 | 12 | 92% | 0% | 8% |
| **4** | 0 | 0 | 1 | 15 | 1 | 0 | 17 | 88% | 6% | 6% |
| **5** | 0 | 0 | 0 | 0 | 22 | 0 | 22 | 100% | 0% | 0% |
| **6** | 0 | 0 | 0 | 0 | 0 | 0 | 0 | NA | 0% | NA |
| **Total** | 4 | 14 | 12 | 15 | 23 | 0 | 68 | 96% | 1% | 3% |

| GHS Category Based on $LD_{50}$ Outcome with Default Starting Dose | GHS Category[2] Based on $LD_{50}$ Outcome with 3T3 NRU-Based Starting Dose | | | | | | | | | |
|---|---|---|---|---|---|---|---|---|---|---|
| | 1 | 2 | 3 | 4 | 5 | 6 | Total | Category Match | Higher NRU Category | Lower NRU Category |
| **1** | 4 | 0 | 0 | 0 | 0 | 0 | 4 | 100% | 0% | 0% |
| **2** | 0 | 13 | 0 | 0 | 0 | 0 | 13 | 100% | 0% | 0% |
| **3** | 0 | 1 | 11 | 0 | 0 | 0 | 12 | 92% | 0% | 8% |
| **4** | 0 | 0 | 0 | 16 | 1 | 0 | 17 | 94% | 6% | 0% |
| **5** | 0 | 0 | 0 | 0 | 21 | 0 | 21 | 100% | 0% | 0% |
| **6** | 0 | 0 | 0 | 0 | 0 | 0 | 0 | NA | 0% | NA |
| **Total** | 4 | 14 | 11 | 16 | 22 | 0 | 67 | 97% | 1% | 1% |

Abbreviations: NRU=Neutral red uptake; GHS=Globally Harmonized System of Classification and Labelling of Chemicals (UN 2005); UDP=Up-and-Down Procedure (OECD 2001a, EPA 2002a); NHK=Normal human epidermal keratinocytes; 3T3= BALB/c 3T3 mouse fibroblasts; NA=Not applicable; RC=Registry of Cytotoxicity.

[1]For 10,000 UDP simulations at each starting dose and dose-mortality slope for 67 substances in the 3T3 NRU test method and 68 substances in the NHK NRU test method. Upper limit dose =5000 mg/kg. The NRU-based starting dose was one dose lower than the $LD_{50}$ predicted by the NRU $IC_{50}$ in the RC rat-only millimole regression (log $LD_{50}$ [mmol/kg] = 0.439 log $IC_{50}$ [mM] + 0.621). The default starting dose = 175 mg/kg. Shaded cells are those containing the correct predictions.

| [2]GHS Toxicity Category | Oral $LD_{50}$ Limits |
|---|---|
| 1 | $LD_{50} \leq 5$ mg/kg |
| 2 | $5 < LD_{50} \leq 50$ mg/kg |
| 3 | $50 < LD_{50} \leq 300$ mg/kg |
| 4 | $300 < LD_{50} \leq 2000$ mg/kg |
| 5 | $2000 < LD_{50} \leq 5000$ mg/kg |
| 6 | $LD_{50} > 5000$ mg/kg |

## Discordant Substances for GHS Category Outcomes of UDP Simulations[1]

| NRU Test Method | Substance | NRU-Based Starting Dose[2] | | Default Starting Dose[3] | | $LD_{50}$ Difference |
|---|---|---|---|---|---|---|
| | | $LD_{50}$ | Toxcat[4] | $LD_{50}$ | Toxcat[4] | |
| 3T3 | Acetaminophen | 2046.78 | 5 | 1765.44 | 4 | -281.34 |
| | Sodium Dichromate Dihydrate | 43.70 | 2 | 51.87 | 3 | 8.17 |
| NHK | Acetaminophen | 2173.95 | 5 | 1755.26 | 4 | -418.69 |
| | Caffeine | 279.63 | 3 | 357.17 | 4 | 77.55 |
| | Sodium Dichromate Dihydrate | 45.09 | 2 | 51.77 | 3 | 6.69 |

Abbreviations: Toxcat=Globally Harmonized System of Classification and Labelling of Chemicals (GHS; UN 2005); UDP= Up-and-Down Procedure (OECD 2001a, EPA 2002a); NRU=Neutral red uptake; 3T3=BALB/c 3T3 mouse fibroblasts; NHK=Normal human epidermal keratinocytes.

[1]Substances for which the simulated UDP outcome (in terms of GHS category) at the NRU-based starting dose did not match the simulated UDP outcome at the default starting dose. Simulations were performed with 10,000 runs at each starting dose and dose-mortality slope for 67 substances in the 3T3 NRU test method and 68 substances in the NHK NRU test method. Upper limit dose =5000 mg/kg.

[2]NRU-based starting dose was one dose lower than the $LD_{50}$ predicted by the NRU $IC_{50}$ in the RC rat-only millimole regression (log $LD_{50}$ [mmol/kg] = 0.439 log $IC_{50}$ [mM] + 0.621).

[3]The default starting dose = 175 mg/kg. Shaded cells are those containing the correct predictions.

| [4]GHS Toxicity Category | Oral $LD_{50}$ Limits |
|---|---|
| 1 | $LD_{50} \leq 5$ mg/kg |
| 2 | $5 < LD_{50} \leq 50$ mg/kg |
| 3 | $50 < LD_{50} \leq 300$ mg/kg |
| 4 | $300 < LD_{50} \leq 2000$ mg/kg |
| 5 | $2000 < LD_{50} \leq 5000$ mg/kg |
| 6 | $LD_{50} > 5000$ mg/kg |

# Appendix N2

## UDP Simulation Results Using Starting Doses One Default Dose Lower than the $LD_{50}$ Predicted by the 3T3 and NHK NRU $IC_{50}$ and the RC Rat-Only Weight Regression - 5000 mg/kg Upper Limit Dose

***[This Page Intentionally Left Blank]***

## Summary of Animals Used and Animals Dead for UDP Simulations by NRU Test Method[1]

| NRU Test Method | Sigma | Starting Dose | Animals Used | | | | Animals Died | | | | % Savings - Animals Used | % Difference - Animals Died |
|---|---|---|---|---|---|---|---|---|---|---|---|---|
| | | | Std. Error | Number[2] | Difference[3] | P[4] | Std. Error | Number[2] | Difference[3] | P[4] | | |
| 3T3 | 0.12 | Cyto | 0.193 | 7.32 | 0.62 | 0.00003 | 0.200 | 3.39 | 0.04 | 0.9360 | 7.8% | 1.2% |
| | | Default | 0.178 | 7.94 | | | 0.200 | 3.43 | | | | |
| | 0.25 | Cyto | 0.186 | 8.04 | 0.63 | 0.0001 | 0.198 | 3.72 | 0.04 | 0.5758 | 7.2% | 1.2% |
| | | Default | 0.180 | 8.67 | | | 0.197 | 3.76 | | | | |
| | 0.50 | Cyto | 0.164 | 8.70 | 0.66 | 0.0001 | 0.186 | 4.05 | 0.06 | 0.3430 | 7.0% | 1.5% |
| | | Default | 0.164 | 9.36 | | | 0.185 | 4.11 | | | | |
| | 1.25 | Cyto | 0.132 | 9.26 | 0.70 | 0.00003 | 0.161 | 4.44 | 0.11 | 0.0119 | 7.0% | 2.3% |
| | | Default | 0.130 | 9.96 | | | 0.152 | 4.55 | | | | |
| | 2.00 | Cyto | 0.110 | 9.41 | 0.60 | 0.00005 | 0.141 | 4.58 | 0.10 | 0.0371 | 6.0% | 2.1% |
| | | Default | 0.095 | 10.01 | | | 0.129 | 4.67 | | | | |
| | | | Average Difference | | 0.64 | | Average Difference | | 0.07 | | | |
| NHK | 0.12 | Cyto | 0.195 | 7.38 | 0.54 | 0.0002 | 0.208 | 3.35 | 0.04 | 0.8066 | 6.8% | 1.1% |
| | | Default | 0.176 | 7.92 | | | 0.203 | 3.39 | | | | |
| | 0.25 | Cyto | 0.189 | 8.12 | 0.54 | 0.0002 | 0.204 | 3.67 | 0.05 | 0.3274 | 6.3% | 1.2% |
| | | Default | 0.175 | 8.66 | | | 0.199 | 3.72 | | | | |
| | 0.50 | Cyto | 0.169 | 8.80 | 0.56 | 0.0003 | 0.191 | 4.02 | 0.05 | 0.3154 | 6.0% | 1.3% |
| | | Default | 0.159 | 9.36 | | | 0.184 | 4.08 | | | | |
| | 1.25 | Cyto | 0.136 | 9.36 | 0.61 | 0.0001 | 0.164 | 4.43 | 0.09 | 0.0044 | 6.1% | 2.0% |
| | | Default | 0.125 | 9.96 | | | 0.151 | 4.52 | | | | |
| | 2.00 | Cyto | 0.114 | 9.48 | 0.53 | 0.0001 | 0.144 | 4.56 | 0.09 | 0.0089 | 7.8% | 1.9% |
| | | Default | 0.092 | 10.02 | | | 0.127 | 4.66 | | | | |
| | | | Average Difference | | 0.56 | | Average Difference | | 0.06 | | | |

Abbreviations: UDP=Up-and-Down Procedure (OECD 2001a, EPA 2002a); NRU=Neutral red uptake; Sigma=Reciprocal of dose-mortality slope; Cyto=NRU-determined starting dose (i.e., one dose lower than the $LD_{50}$ predicted by the NRU $IC_{50}$ in the RC rat-only weight regression (log $LD_{50}$ [mg/kg] = 0.372 log $IC_{50}$ [mg/mL] + 2.024); Default=Default starting dose of 175 mg/kg; Std Error=Standard error for number of animals; 3T3= BALB/c 3T3 mouse fibroblasts; NHK=Normal human epidermal keratinocytes; RC=Registry of Cytotoxicity.

[1]For 10,000 UDP simulations at each starting dose and dose-mortality slope for 67 substances in the 3T3 NRU test method and 68 substances in the NHK NRU test method. Upper limit dose =5000 mg/kg.

[2]Mean number of animals for 10,000 simulations.

[3]Difference between mean number of animals for the default starting dose and mean number of animals for the NRU-based starting dose.

[4]P-value is from one-sided Wilcoxon signed rank test for difference in animals between the default starting dose and the NRU-based starting dose. Significant values at $p < 0.05$.

## Summary of Stopping Rules Used for the UDP Simulations by NRU Test Method[1]

| NRU Test Method | Sigma | Starting Dose | 3 Animals at Limit Dose[2] | 5 Reversals[2] | Likelihood Ratio[2] | Maximum Number of Animals Used[2] |
|---|---|---|---|---|---|---|
| 3T3 | 0.12 | Cyto | 15.6% | 55.8% | 26.8% | 1.8% |
| | | Default | 15.4% | 56.8% | 25.3% | 2.4% |
| | 0.25 | Cyto | 15.0% | 33.4% | 47.9% | 3.7% |
| | | Default | 14.7% | 34.1% | 46.0% | 5.3% |
| | 0.5 | Cyto | 13.4% | 19.7% | 59.6% | 7.2% |
| | | Default | 13.0% | 20.1% | 57.3% | 9.7% |
| | 1.25 | Cyto | 9.9% | 13.4% | 64.6% | 12.1% |
| | | Default | 9.1% | 13.6% | 60.8% | 16.4% |
| | 2 | Cyto | 8.6% | 12.3% | 65.6% | 13.5% |
| | | Default | 7.4% | 12.5% | 62.5% | 17.6% |
| NHK | 0.12 | Cyto | 16.8% | 55.4% | 26.0% | 1.8% |
| | | Default | 16.6% | 55.9% | 25.0% | 2.4% |
| | 0.25 | Cyto | 16.2% | 33.3% | 46.7% | 3.8% |
| | | Default | 15.8% | 33.5% | 45.4% | 5.2% |
| | 0.5 | Cyto | 14.3% | 19.7% | 58.3% | 7.7% |
| | | Default | 13.8% | 19.9% | 56.6% | 9.7% |
| | 1.25 | Cyto | 10.2% | 13.5% | 63.5% | 12.8% |
| | | Default | 9.5% | 13.5% | 60.4% | 16.5% |
| | 2 | Cyto | 8.7% | 12.3% | 64.9% | 14.1% |
| | | Default | 7.6% | 12.5% | 62.3% | 17.6% |

Abbreviations: UDP=Up-and-Down Procedure (OECD 2001a, EPA 2002a); NRU=Neutral red uptake; Sigma=Reciprocal of dose-mortality slope; Cyto=NRU-determined starting dose (i.e., one dose lower than the $LD_{50}$ predicted by the NRU $IC_{50}$ in the RC rat-only weight regression (log $LD_{50}$ [mg/kg] = 0.372 log $IC_{50}$ [µg/mL] + 2.024); Default=Default starting dose of 175 mg/kg; 3T3= BALB/c 3T3 mouse fibroblasts; NHK=Normal human epidermal keratinocytes; RC=Registry of Cytotoxicity.

[1]For 10,000 UDP simulations at each starting dose and dose-mortality slope for 67 substances in the 3T3 NRU test method and 68 substances in the NHK NRU test method. Upper limit dose =5000 mg/kg.

[2]Percentage of the 10,000 test simulations that satisfied the specified condition for completion of testing (see OECD [2001a]; EPA [2002a]).

## Summary of Animals Used and Animals Dead for UDP Simulations by GHS Toxicity Category and NRU Test Method[1]

| Toxcat | NRU Test Method | Sigma | Starting Dose | Animals Used | | | | Animals Died | | | | % Savings - Animals Used | % Difference - Animals Died |
|---|---|---|---|---|---|---|---|---|---|---|---|---|---|
| | | | | Std. Error | Number[2] | Difference[3] | P[4] | Std. Error | Number[2] | Difference[3] | P[4] | | |
| 1 | 3T3 | 0.12 | Cyto | 0.366 | 8.92 | 0.78 | 0.6250 | 0.404 | 5.74 | 0.65 | 0.6250 | 8.0% | 10.2% |
| | | | Default | 0.278 | 9.70 | | | 0.171 | 6.39 | | | | |
| | | 0.25 | Cyto | 0.587 | 9.75 | 0.81 | 0.6250 | 0.521 | 6.22 | 0.66 | 0.6250 | 7.7% | 9.6% |
| | | | Default | 0.181 | 10.55 | | | 0.158 | 6.88 | | | | |
| | | 0.50 | Cyto | 0.623 | 10.38 | 0.90 | 0.6250 | 0.549 | 6.63 | 0.72 | 0.6250 | 8.0% | 9.8% |
| | | | Default | 0.197 | 11.29 | | | 0.196 | 7.35 | | | | |
| | | 1.25 | Cyto | 0.594 | 10.86 | 0.86 | 0.6250 | 0.540 | 6.86 | 0.70 | 0.6250 | 7.3% | 9.2% |
| | | | Default | 0.147 | 11.72 | | | 0.166 | 7.55 | | | | |
| | | 2.00 | Cyto | 0.503 | 10.80 | 0.66 | 0.6250 | 0.466 | 6.66 | 0.57 | 0.6250 | 5.7% | 7.9% |
| | | | Default | 0.142 | 11.45 | | | 0.151 | 7.24 | | | | |
| | | | | Average Difference | | 0.80 | | Average Difference | | 0.66 | | | |
| | NHK | 0.12 | Cyto | 0.515 | 8.97 | 0.69 | 0.3750 | 0.531 | 5.81 | 0.56 | 0.3750 | 7.1% | 8.8% |
| | | | Default | 0.268 | 9.66 | | | 0.169 | 6.37 | | | | |
| | | 0.25 | Cyto | 0.703 | 9.79 | 0.74 | 0.3750 | 0.629 | 6.28 | 0.59 | 0.3750 | 7.0% | 8.6% |
| | | | Default | 0.218 | 10.53 | | | 0.178 | 6.87 | | | | |
| | | 0.50 | Cyto | 0.711 | 10.49 | 0.72 | 0.6250 | 0.641 | 6.71 | 0.60 | 0.6250 | 6.4% | 8.2% |
| | | | Default | 0.242 | 11.21 | | | 0.224 | 7.31 | | | | |
| | | 1.25 | Cyto | 0.694 | 10.94 | 0.76 | 0.6250 | 0.638 | 6.93 | 0.62 | 0.6250 | 6.5% | 8.3% |
| | | | Default | 0.168 | 11.70 | | | 0.179 | 7.56 | | | | |
| | | 2.00 | Cyto | 0.632 | 10.83 | 0.63 | 0.6250 | 0.581 | 6.72 | 0.52 | 0.6250 | 5.5% | 7.1% |
| | | | Default | 0.159 | 11.47 | | | 0.157 | 7.24 | | | | |
| | | | | Average Difference | | 0.71 | | Average Difference | | 0.58 | | | |
| 2 | 3T3 | 0.12 | Cyto | 0.442 | 8.41 | 0.06 | 1.0000 | 0.398 | 5.04 | 0.08 | 1.0000 | 0.8% | 1.5% |
| | | | Default | 0.276 | 8.47 | | | 0.240 | 5.12 | | | | |
| | | 0.25 | Cyto | 0.393 | 9.07 | 0.05 | 1.0000 | 0.370 | 5.41 | 0.06 | 1.0000 | 0.5% | 1.1% |
| | | | Default | 0.201 | 9.11 | | | 0.202 | 5.48 | | | | |
| | | 0.50 | Cyto | 0.419 | 9.58 | 0.13 | 0.9460 | 0.381 | 5.70 | 0.09 | 1.0000 | 1.3% | 1.5% |
| | | | Default | 0.219 | 9.71 | | | 0.210 | 5.78 | | | | |
| | | 1.25 | Cyto | 0.381 | 10.11 | 0.08 | 0.9460 | 0.359 | 5.93 | 0.05 | 0.9460 | 0.8% | 0.8% |
| | | | Default | 0.225 | 10.19 | | | 0.214 | 5.98 | | | | |
| | | 2.00 | Cyto | 0.297 | 10.22 | -0.01 | 0.7354 | 0.302 | 5.91 | 0.00 | 0.7869 | -0.1% | 0.0% |
| | | | Default | 0.170 | 10.21 | | | 0.174 | 5.91 | | | | |
| | | | | Average Difference | | 0.06 | | Average Difference | | 0.05 | | | |
| | NHK | 0.12 | Cyto | 0.439 | 8.59 | -0.13 | 0.3757 | 0.427 | 5.10 | 0.01 | 0.6848 | -1.6% | 0.2% |
| | | | Default | 0.267 | 8.45 | | | 0.235 | 5.11 | | | | |
| | | 0.25 | Cyto | 0.384 | 9.24 | -0.12 | 0.5879 | 0.396 | 5.46 | 0.01 | 1.0000 | -1.4% | 0.2% |
| | | | Default | 0.178 | 9.12 | | | 0.193 | 5.47 | | | | |
| | | 0.50 | Cyto | 0.413 | 9.78 | -0.07 | 0.5417 | 0.409 | 5.76 | 0.02 | 0.8394 | -0.8% | 0.3% |
| | | | Default | 0.177 | 9.70 | | | 0.192 | 5.78 | | | | |
| | | 1.25 | Cyto | 0.385 | 10.28 | -0.11 | 0.4973 | 0.391 | 5.99 | -0.03 | 0.8394 | -1.1% | -0.4% |
| | | | Default | 0.187 | 10.17 | | | 0.198 | 5.96 | | | | |
| | | 2.00 | Cyto | 0.306 | 10.35 | -0.16 | 0.4973 | 0.334 | 5.95 | -0.05 | 0.7869 | -1.6% | -0.9% |
| | | | Default | 0.149 | 10.19 | | | 0.166 | 5.89 | | | | |
| | | | | Average Difference | | -0.12 | | Average Difference | | -0.01 | | | |

## Summary of Animals Used and Animals Dead for UDP Simulations by GHS Toxicity Category and NRU Test Method[1]

| Toxcat | NRU Test Method | Sigma | Starting Dose | Animals Used | | | | Animals Died | | | | % Savings - Animals Used | % Difference - Animals Died |
|---|---|---|---|---|---|---|---|---|---|---|---|---|---|
| | | | | Std. Error | Number[2] | Difference[3] | P[4] | Std. Error | Number[2] | Difference[3] | P[4] | | |
| 3 | 3T3 | 0.12 | Cyto | 0.181 | 6.76 | -0.18 | 0.0923 | 0.136 | 3.50 | -0.14 | 0.1294 | -2.7% | -4.2% |
| | | | Default | 0.190 | 6.58 | | | 0.127 | 3.36 | | | | |
| | | 0.25 | Cyto | 0.182 | 7.33 | -0.20 | 0.1514 | 0.146 | 3.83 | -0.15 | 0.2061 | -2.8% | -4.0% |
| | | | Default | 0.147 | 7.13 | | | 0.102 | 3.68 | | | | |
| | | 0.50 | Cyto | 0.180 | 7.99 | -0.25 | 0.1514 | 0.146 | 4.18 | -0.16 | 0.1763 | -3.3% | -4.0% |
| | | | Default | 0.100 | 7.74 | | | 0.080 | 4.02 | | | | |
| | | 1.25 | Cyto | 0.119 | 8.86 | -0.22 | 0.1294 | 0.112 | 4.61 | -0.13 | 0.3804 | -2.5% | -2.8% |
| | | | Default | 0.056 | 8.64 | | | 0.057 | 4.48 | | | | |
| | | 2.00 | Cyto | 0.069 | 9.25 | -0.15 | 0.1294 | 0.084 | 4.78 | -0.09 | 0.5186 | -1.6% | -1.8% |
| | | | Default | 0.039 | 9.11 | | | 0.049 | 4.70 | | | | |
| | | | | Average Difference | | -0.20 | | Average Difference | | -0.13 | | | |
| | NHK | 0.12 | Cyto | 0.205 | 6.75 | -0.18 | 0.2036 | 0.137 | 3.41 | -0.06 | 0.2334 | -2.7% | -1.8% |
| | | | Default | 0.194 | 6.58 | | | 0.129 | 3.35 | | | | |
| | | 0.25 | Cyto | 0.225 | 7.33 | -0.22 | 0.1099 | 0.145 | 3.74 | -0.08 | 0.1763 | -3.2% | -2.1% |
| | | | Default | 0.160 | 7.11 | | | 0.108 | 3.66 | | | | |
| | | 0.50 | Cyto | 0.209 | 7.99 | -0.24 | 0.1294 | 0.141 | 4.09 | -0.07 | 0.1763 | -3.1% | -1.9% |
| | | | Default | 0.110 | 7.75 | | | 0.082 | 4.01 | | | | |
| | | 1.25 | Cyto | 0.123 | 8.85 | -0.18 | 0.1294 | 0.106 | 4.52 | -0.03 | 0.8501 | -2.1% | -0.7% |
| | | | Default | 0.058 | 8.67 | | | 0.060 | 4.49 | | | | |
| | | 2.00 | Cyto | 0.083 | 9.26 | -0.14 | 0.1294 | 0.088 | 4.70 | 0.00 | 0.9097 | -1.5% | -0.1% |
| | | | Default | 0.035 | 9.13 | | | 0.048 | 4.70 | | | | |
| | | | | Average Difference | | -0.19 | | Average Difference | | -0.05 | | | |
| 4 | 3T3 | 0.12 | Cyto | 0.176 | 7.17 | 0.28 | 0.0335 | 0.063 | 3.39 | 0.00 | 0.8999 | 3.8% | 0.0% |
| | | | Default | 0.236 | 7.46 | | | 0.067 | 3.39 | | | | |
| | | 0.25 | Cyto | 0.173 | 7.68 | 0.25 | 0.0507 | 0.032 | 3.61 | -0.01 | 0.1928 | 3.1% | -0.3% |
| | | | Default | 0.202 | 7.93 | | | 0.049 | 3.60 | | | | |
| | | 0.50 | Cyto | 0.193 | 8.16 | 0.35 | 0.0577 | 0.039 | 3.80 | 0.05 | 0.1167 | 4.1% | 1.2% |
| | | | Default | 0.208 | 8.52 | | | 0.047 | 3.85 | | | | |
| | | 1.25 | Cyto | 0.159 | 8.83 | 0.32 | 0.0250 | 0.048 | 4.10 | 0.03 | 0.1046 | 3.5% | 0.8% |
| | | | Default | 0.142 | 9.15 | | | 0.020 | 4.13 | | | | |
| | | 2.00 | Cyto | 0.115 | 9.17 | 0.21 | 0.0335 | 0.043 | 4.26 | -0.01 | 0.7820 | 2.3% | -0.2% |
| | | | Default | 0.084 | 9.38 | | | 0.020 | 4.25 | | | | |
| | | | | Average Difference | | 0.28 | | Average Difference | | 0.01 | | | |
| | NHK | 0.12 | Cyto | 0.160 | 7.17 | 0.31 | 0.0577 | 0.060 | 3.38 | 0.03 | 0.2744 | 4.1% | 0.8% |
| | | | Default | 0.234 | 7.48 | | | 0.066 | 3.41 | | | | |
| | | 0.25 | Cyto | 0.194 | 7.71 | 0.27 | 0.0507 | 0.028 | 3.62 | 0.02 | 0.1591 | 3.4% | 0.4% |
| | | | Default | 0.189 | 7.98 | | | 0.042 | 3.63 | | | | |
| | | 0.50 | Cyto | 0.223 | 8.20 | 0.34 | 0.0833 | 0.040 | 3.82 | 0.05 | 0.1167 | 3.9% | 1.3% |
| | | | Default | 0.206 | 8.54 | | | 0.046 | 3.87 | | | | |
| | | 1.25 | Cyto | 0.196 | 8.86 | 0.28 | 0.0577 | 0.050 | 4.11 | 0.02 | 0.2744 | 3.1% | 0.4% |
| | | | Default | 0.141 | 9.14 | | | 0.022 | 4.13 | | | | |
| | | 2.00 | Cyto | 0.143 | 9.18 | 0.19 | 0.0654 | 0.043 | 4.28 | -0.02 | 0.7820 | 2.1% | -0.6% |
| | | | Default | 0.083 | 9.38 | | | 0.019 | 4.25 | | | | |
| | | | | Average Difference | | 0.28 | | Average Difference | | 0.02 | | | |

## Summary of Animals Used and Animals Dead for UDP Simulations by GHS Toxicity Category and NRU Test Method[1]

| Toxcat | Cell Type | Sigma | Method | Animals Used | | | | Animals Died | | | | % Savings - Animals Used | % Difference - Animals Died |
|---|---|---|---|---|---|---|---|---|---|---|---|---|---|
| | | | | Std. Error | Number[2] | Difference[3] | P[4] | Std. Error | Number[2] | Difference[3] | P[4] | | |
| 5 | 3T3 | 0.12 | Cyto | 0.365 | 7.61 | 1.59 | 0.0020 | 0.046 | 3.20 | 0.12 | 0.0059 | 17.3% | 3.6% |
| | | | Default | 0.235 | 9.20 | | | 0.037 | 3.31 | | | | |
| | | 0.25 | Cyto | 0.285 | 8.67 | 1.72 | 0.0020 | 0.056 | 3.41 | 0.18 | 0.0098 | 16.6% | 5.1% |
| | | | Default | 0.159 | 10.39 | | | 0.065 | 3.59 | | | | |
| | | 0.50 | Cyto | 0.242 | 9.14 | 1.64 | 0.0039 | 0.055 | 3.52 | 0.16 | 0.0137 | 15.2% | 4.2% |
| | | | Default | 0.106 | 10.78 | | | 0.063 | 3.67 | | | | |
| | | 1.25 | Cyto | 0.204 | 9.08 | 1.61 | 0.0020 | 0.044 | 3.65 | 0.23 | 0.0020 | 15.0% | 6.0% |
| | | | Default | 0.071 | 10.69 | | | 0.031 | 3.88 | | | | |
| | | 2.00 | Cyto | 0.161 | 9.05 | 1.33 | 0.0039 | 0.037 | 3.77 | 0.21 | 0.0039 | 12.8% | 5.2% |
| | | | Default | 0.064 | 10.38 | | | 0.015 | 3.97 | | | | |
| | | | | Average Difference | | 1.58 | | Average Difference | | 0.18 | | | |
| | NHK | 0.12 | Cyto | 0.326 | 7.90 | 1.28 | 0.0020 | 0.035 | 3.23 | 0.08 | 0.0273 | 14.0% | 2.5% |
| | | | Default | 0.234 | 9.18 | | | 0.038 | 3.31 | | | | |
| | | 0.25 | Cyto | 0.307 | 8.93 | 1.41 | 0.0020 | 0.052 | 3.43 | 0.15 | 0.0098 | 13.6% | 4.2% |
| | | | Default | 0.146 | 10.34 | | | 0.066 | 3.58 | | | | |
| | | 0.50 | Cyto | 0.251 | 9.40 | 1.38 | 0.0020 | 0.047 | 3.54 | 0.13 | 0.0098 | 12.8% | 3.5% |
| | | | Default | 0.084 | 10.77 | | | 0.067 | 3.66 | | | | |
| | | 1.25 | Cyto | 0.194 | 9.30 | 1.37 | 0.0020 | 0.033 | 3.67 | 0.19 | 0.0020 | 12.8% | 5.0% |
| | | | Default | 0.055 | 10.67 | | | 0.038 | 3.86 | | | | |
| | | 2.00 | Cyto | 0.155 | 9.20 | 1.15 | 0.0020 | 0.031 | 3.79 | 0.18 | 0.0020 | 11.1% | 4.4% |
| | | | Default | 0.038 | 10.36 | | | 0.023 | 3.96 | | | | |
| | | | | Average Difference | | 1.32 | | Average Difference | | 0.15 | | | |
| 6 | 3T3 | 0.12 | Cyto | 0.686 | 6.14 | 1.63 | 0.0005 | 0.316 | 0.88 | -0.03 | 0.1294 | 21.0% | -3.1% |
| | | | Default | 0.587 | 7.76 | | | 0.304 | 0.85 | | | | |
| | | 0.25 | Cyto | 0.653 | 7.05 | 1.62 | 0.0005 | 0.317 | 1.33 | -0.03 | 0.0210 | 18.7% | -2.2% |
| | | | Default | 0.542 | 8.67 | | | 0.309 | 1.30 | | | | |
| | | 0.50 | Cyto | 0.484 | 8.23 | 1.65 | 0.0005 | 0.254 | 2.04 | -0.01 | 0.3394 | 16.7% | -0.4% |
| | | | Default | 0.343 | 9.87 | | | 0.256 | 2.03 | | | | |
| | | 1.25 | Cyto | 0.305 | 8.93 | 1.96 | 0.0005 | 0.126 | 2.99 | 0.20 | 0.0005 | 18.0% | 6.3% |
| | | | Default | 0.058 | 10.89 | | | 0.122 | 3.20 | | | | |
| | | 2.00 | Cyto | 0.251 | 8.87 | 1.88 | 0.0005 | 0.089 | 3.32 | 0.29 | 0.0005 | 17.5% | 8.0% |
| | | | Default | 0.028 | 10.75 | | | 0.067 | 3.61 | | | | |
| | | | | Average Difference | | 1.75 | | Average Difference | | 0.09 | | | |
| | NHK | 0.12 | Cyto | 0.625 | 6.12 | 1.53 | 0.0005 | 0.298 | 0.82 | -0.02 | 0.0398 | 20.0% | -3.1% |
| | | | Default | 0.560 | 7.66 | | | 0.289 | 0.80 | | | | |
| | | 0.25 | Cyto | 0.581 | 7.10 | 1.53 | 0.0002 | 0.296 | 1.28 | -0.02 | 0.1099 | 17.7% | -1.8% |
| | | | Default | 0.500 | 8.63 | | | 0.287 | 1.26 | | | | |
| | | 0.50 | Cyto | 0.435 | 8.34 | 1.54 | 0.0002 | 0.236 | 2.03 | -0.01 | 0.1677 | 15.6% | -0.6% |
| | | | Default | 0.318 | 9.88 | | | 0.236 | 2.02 | | | | |
| | | 1.25 | Cyto | 0.277 | 9.07 | 1.81 | 0.0002 | 0.112 | 3.01 | 0.17 | 0.0002 | 16.7% | 5.4% |
| | | | Default | 0.057 | 10.88 | | | 0.114 | 3.18 | | | | |
| | | 2.00 | Cyto | 0.235 | 8.99 | 1.75 | 0.0002 | 0.078 | 3.34 | 0.27 | 0.0005 | 16.3% | 7.4% |
| | | | Default | 0.022 | 10.74 | | | 0.062 | 3.61 | | | | |
| | | | | Average Difference | | 1.63 | | Average Difference | | 0.08 | | | |

Abbreviations: UDP=Up-and-Down Procedure (OECD 2001a, EPA 2002a); Toxcat=Category from Globally Harmonized System of Classification and Labeling of Chemicals[5] (GHS; UN 2005); NRU=Neutral red uptake; Sigma=Reciprocal of dose-mortality slope; Cyto=NRU-determined starting dose (i.e., one dose lower than the $LD_{50}$ predicted by the NRU $IC_{50}$ in the RC rat-only weight regression (log $LD_{50}$ [mmol/kg] = 0.372 log $IC_{50}$ [mM] + 2.024); Default=Default starting dose of 175 mg/kg; Std. Error=Standard error for number of animals; 3T3= BALB/c 3T3 mouse fibroblasts; NHK=Normal human epidermal keratinocytes; RC=Registry of Cytotoxicity.

[1]For 10,000 UDP simulations at each starting dose and dose-mortality slope for 67 substances in the 3T3 NRU test method and 68 substances in the NHK NRU test method. Upper limit dose =5000 mg/kg.

[2]Mean number of animals for 10,000 simulations.

[3]Difference between mean animals used for the default starting dose and mean animals used for the NRU-based starting dose.

[4]P-value is from one-side Wilcoxon signed rank test for difference in animals between the default and NRU-based starting doses. Significant values at $p < 0.05$.

| [5]GHS Toxicity Category | Oral $LD_{50}$ Limits |
|---|---|
| 1 | $LD_{50} \leq 5$ mg/kg |
| 2 | $5 < LD_{50} \leq 50$ mg/kg |
| 3 | $50 < LD_{50} \leq 300$ mg/kg |
| 4 | $300 < LD_{50} \leq 2000$ mg/kg |
| 5 | $2000 < LD_{50} \leq 5000$ mg/kg |
| 6 | $LD_{50} > 5000$ mg/kg |

## Concordance of NRU-Based Starting Dose with Default Starting Dose for GHS Acute Oral Toxicity Category Outcome Based on Simulated UDP $LD_{50}$[1]

| GHS Category Based on $LD_{50}$ Outcome with Default Starting Dose | GHS Category Based on $LD_{50}$ Outcome with NHK NRU-Based Starting Dose | | | | | | | | | |
|---|---|---|---|---|---|---|---|---|---|---|
| | d | 2 | 3 | 4 | 5 | 6 | Total | Category Match | Higher NRU Category | Lower NRU Category |
| **1** | 4 | 0 | 0 | 0 | 0 | 0 | 4 | 100% | 0% | 0% |
| **2** | 0 | 13 | 0 | 0 | 0 | 0 | 13 | 100% | 0% | 0% |
| **3** | 0 | 1 | 11 | 0 | 0 | 0 | 12 | 92% | 0% | 8% |
| **4** | 0 | 0 | 1 | 16 | 0 | 0 | 17 | 94% | 0% | 6% |
| **5** | 0 | 0 | 0 | 0 | 22 | 0 | 22 | 100% | 0% | 0% |
| **6** | 0 | 0 | 0 | 0 | 0 | 0 | 0 | NA | 0% | NA |
| **Total** | 4 | 14 | 12 | 16 | 22 | 0 | 68 | 97% | 0% | 3% |

| GHS Category Based on $LD_{50}$ Outcome with Default Starting Dose | GHS Category Based on $LD_{50}$ Outcome with 3T3 NRU-Based Starting Dose | | | | | | | | | |
|---|---|---|---|---|---|---|---|---|---|---|
| | 1 | 2 | 3 | 4 | 5 | 6 | Total | Category Match | Higher NRU Category | Lower NRU Category |
| **1** | 4 | 0 | 0 | 0 | 0 | 0 | 4 | 100% | 0% | 0% |
| **2** | 0 | 13 | 0 | 0 | 0 | 0 | 13 | 100% | 0% | 0% |
| **3** | 0 | 1 | 11 | 0 | 0 | 0 | 12 | 92% | 0% | 8% |
| **4** | 0 | 0 | 1 | 16 | 0 | 0 | 17 | 94% | 0% | 6% |
| **5** | 0 | 0 | 0 | 0 | 21 | 0 | 21 | 100% | 0% | 0% |
| **6** | 0 | 0 | 0 | 0 | 0 | 0 | 0 | NA | 0% | NA |
| **Total** | 4 | 14 | 12 | 16 | 21 | 0 | 67 | 97% | 0% | 3% |

Abbreviations: NRU=Neutral red uptake; GHS=Globally Harmonized System of Classification and Labelling of Chemicals (UN 2005); UDP=Up-and-Down Procedure (OECD 2001a, EPA 2002a); NHK=Normal human epidermal keratinocytes; 3T3= BALB/c 3T3 mouse fibroblasts; NA=Not applicable; RC=Registry of Cytotoxicity.

[1]For 10,000 UDP simulations at each starting dose and dose-mortality slope for 67 substances in the 3T3 NRU test method and 68 substances in the NHK NRU test method. Upper limit dose =5000 mg/kg. The NRU-based starting dose was one dose lower than the $LD_{50}$ predicted by the NRU $IC_{50}$ in the RC rat-only weight regression (log $LD_{50}$ [mg/kg] = 0.372 log $IC_{50}$ [µg/mL] + 2.024). The default starting dose = 175 mg/kg. Shaded cells are those containing the correct predictions.

| [2]GHS Toxicity Category | Oral $LD_{50}$ Limits |
|---|---|
| 1 | $LD_{50} \leq 5$ mg/kg |
| 2 | $5 < LD_{50} \leq 50$ mg/kg |
| 3 | $50 < LD_{50} \leq 300$ mg/kg |
| 4 | $300 < LD_{50} \leq 2000$ mg/kg |
| 5 | $2000 < LD_{50} \leq 5000$ mg/kg |
| 6 | $LD_{50} > 5000$ mg/kg |

## Discordant Substances for GHS Category Outcomes of UDP Simulations[1]

| NRU Test Method | Substance | NRU-Based Starting Dose[2] | | Default Starting Dose[3] | | $LD_{50}$ Difference |
|---|---|---|---|---|---|---|
| | | $LD_{50}$ | Toxcat[4] | $LD_{50}$ | Toxcat[4] | |
| 3T3 | Caffeine | 271.54 | 3 | 338.16 | 4 | 66.62 |
| | Sodium dichromate dihydrate | 43.70 | 47.97 | 2 | 50.66 | 3 |
| NHK | Caffeine | 269.85 | 3 | 339.43 | 4 | 69.59 |
| | Sodium dichromate dihydrate | 48.52 | 2 | 50.64 | 3 | 2.12 |

Abbreviations: Toxcat=Globally Harmonized System of Classification and Labelling of Chemicals (GHS; UN 2005); UDP= Up-and-Down Procedure (OECD 2001a, EPA 2002a); NRU=Neutral red uptake; 3T3=BALB/c 3T3 mouse fibroblasts; NHK=Normal human epidermal keratinocytes.

[1]Substances for which the simulated UDP outcome (in terms of GHS category) at the NRU-based starting dose did not match the simulated UDP outcome at the default starting dose. Simulations were performed with 10,000 runs at each starting dose and dose-mortality slope for 67 substances in the 3T3 NRU test method and 68 substances in the NHK NRU test method. Upper limit dose =5000 mg/kg.

[2]NRU-based starting dose was one dose lower than the $LD_{50}$ predicted by the NRU $IC_{50}$ in the RC rat-only weight regression (log $LD_{50}$ [mg/kg] = 0.372 log $IC_{50}$ [μg/mL] + 2.024).

[3]The default starting dose = 175 mg/kg. Shaded cells are those containing the correct predictions.

| [4]GHS Toxicity Category | Oral $LD_{50}$ Limits |
|---|---|
| 1 | $LD_{50} \leq 5$ mg/kg |
| 2 | $5 < LD_{50} \leq 50$ mg/kg |
| 3 | $50 < LD_{50} \leq 300$ mg/kg |
| 4 | $300 < LD_{50} \leq 2000$ mg/kg |
| 5 | $2000 < LD_{50} \leq 5000$ mg/kg |
| 6 | $LD_{50} > 5000$ mg/kg |

# Appendix N3

## ATC Simulation Results Starting at the Next Fixed Dose Below the $LD_{50}$ Predicted by the 3T3 and NHK NRU $IC_{50}$ and the RC Rat-Only Millimole Regression - 2000 mg/kg Upper Limit Dose

***[This Page Intentionally Left Blank]***

## Summary of Animals Used and Animals Dead for ATC Simulations by NRU Test Method[1]

| NRU Test Method | Sigma | Starting Dose | Animals Used | | | | Animals Died | | | | % Savings - Animals Used | % Difference - Animals Died |
|---|---|---|---|---|---|---|---|---|---|---|---|---|
| | | | Std. Error | Number[2] | Difference[3] | P[4] | Std. Error | Number[2] | Difference[3] | P[4] | | |
| NHK | 0.12 | Cyto | 0.290 | 9.96 | 0.70 | 0.0113 | 0.286 | 2.67 | 0.48 | 0.1061 | 6.6% | 15.3% |
| | | Default | 0.169 | 10.67 | | | 0.334 | 3.15 | | | | |
| | 0.25 | Cyto | 0.269 | 9.98 | 0.77 | 0.0127 | 0.283 | 2.88 | 0.50 | 0.5613 | 7.1% | 14.7% |
| | | Default | 0.149 | 10.75 | | | 0.324 | 3.38 | | | | |
| | 0.50 | Cyto | 0.239 | 10.11 | 0.80 | 0.0005 | 0.261 | 3.19 | 0.53 | 0.0002 | 7.3% | 14.2% |
| | | Default | 0.114 | 10.91 | | | 0.297 | 3.72 | | | | |
| | 1.25 | Cyto | 0.183 | 10.31 | 0.79 | 0.0035 | 0.201 | 3.86 | 0.55 | 0.0002 | 7.1% | 12.4% |
| | | Default | 0.068 | 11.10 | | | 0.228 | 4.40 | | | | |
| | 2.00 | Cyto | 0.163 | 10.43 | 0.82 | 0.0003 | 0.168 | 4.20 | 0.53 | 0.0012 | 7.3% | 11.2% |
| | | Default | 0.050 | 11.25 | | | 0.189 | 4.73 | | | | |
| | | | Average Difference | | 0.78 | | Average Difference | | 0.52 | | | |
| 3T3 | 0.12 | Cyto | 0.273 | 10.13 | 0.51 | 0.0226 | 0.291 | 2.77 | 0.43 | 0.0283 | 4.8% | 13.4% |
| | | Default | 0.170 | 10.64 | | | 0.335 | 3.20 | | | | |
| | 0.25 | Cyto | 0.257 | 10.15 | 0.58 | 0.0075 | 0.281 | 2.99 | 0.45 | 0.0139 | 5.4% | 13.0% |
| | | Default | 0.151 | 10.73 | | | 0.325 | 3.43 | | | | |
| | 0.50 | Cyto | 0.238 | 10.27 | 0.62 | 0.0038 | 0.257 | 3.31 | 0.46 | 0.0237 | 5.7% | 12.2% |
| | | Default | 0.115 | 10.89 | | | 0.299 | 3.77 | | | | |
| | 1.25 | Cyto | 0.193 | 10.46 | 0.64 | 0.0154 | 0.201 | 3.96 | 0.48 | 0.00003 | 5.8% | 10.8% |
| | | Default | 0.067 | 11.10 | | | 0.228 | 4.43 | | | | |
| | 2.00 | Cyto | 0.166 | 10.56 | 0.69 | 0.0002 | 0.168 | 4.28 | 0.47 | 0.00002 | 6.1% | 9.9% |
| | | Default | 0.049 | 11.25 | | | 0.190 | 4.76 | | | | |
| | | | Average Difference | | 0.61 | | Average Difference | | 0.46 | | | |

Abbreviations: ATC=Acute Toxic Class method (OECD 2001d); NRU=Neutral red uptake; Sigma=Reciprocal of dose-mortality slope; Cyto=NRU-determined starting dose (i.e., one dose lower than the $LD_{50}$ predicted by the NRU $IC_{50}$ in the RC rat-only millimole regression (log $LD_{50}$ [mmol/kg] = 0.439 log $IC_{50}$ [mM] + 0.621); Default=Default starting dose of 300 mg/kg; Std. Error=Standard error for number of animals; 3T3= BALB/c 3T3 mouse fibroblasts; NHK=Normal human epidermal keratinocytes; RC=Registry of Cytotoxicity.

[1]For 2000 ATC simulations at each starting dose and dose-mortality slope for 67 substances in the 3T3 NRU test method and 68 substances in the NHK NRU test method. Upper limit dose =2000 mg/kg.

[2]Mean number of animals for 2000 simulations.

[3]Difference between mean number of animals for the default starting dose and mean number of animals for the NRU-based starting dose.

[4]P-value is from one-sided Wilcoxon signed rank test for difference in animals between the default and NRU-based starting doses. Significant values at $p < 0.05$.

## Summary of Animals Used and Animals Dead for ATC Simulations by GHS Toxicity Category and NRU Test Method[1]

| Toxcat | NRU Test Method | Sigma | Starting Dose | Animals Used | | | | Animals Died | | | | % Savings - Animals Used | % Difference - Animals Died |
|---|---|---|---|---|---|---|---|---|---|---|---|---|---|
| | | | | Std. Error | Number[2] | Difference[3] | P[4] | Std. Error | Number[2] | Difference[3] | P[4] | | |
| 1 | NHK | 0.12 | Cyto | 1.228 | 6.09 | 2.99 | 0.2500 | 1.209 | 5.87 | 2.99 | 0.1250 | 33.0% | 33.8% |
| | | | Default | 0.083 | 9.09 | | | 0.080 | 8.86 | | | | |
| | | 0.25 | Cyto | 1.284 | 6.37 | 2.99 | 0.2500 | 1.183 | 5.68 | 2.99 | 0.1250 | 31.9% | 34.5% |
| | | | Default | 0.178 | 9.35 | | | 0.070 | 8.67 | | | | |
| | | 0.50 | Cyto | 1.311 | 6.78 | 2.96 | 0.2500 | 1.192 | 5.52 | 2.98 | 0.2500 | 30.4% | 35.0% |
| | | | Default | 0.158 | 9.74 | | | 0.060 | 8.50 | | | | |
| | | 1.25 | Cyto | 1.247 | 7.48 | 2.91 | 0.2500 | 1.052 | 5.20 | 2.72 | 0.1250 | 28.0% | 34.4% |
| | | | Default | 0.111 | 10.39 | | | 0.066 | 7.92 | | | | |
| | | 2.00 | Cyto | 1.285 | 7.86 | 2.99 | 0.2500 | 0.973 | 5.05 | 2.46 | 0.2500 | 27.6% | 32.7% |
| | | | Default | 0.066 | 10.85 | | | 0.052 | 7.51 | | | | |
| | | | | Average Difference | | 2.97 | | Average Difference | | 2.83 | | | |
| | 3T3 | 0.12 | Cyto | 1.088 | 6.38 | 2.70 | 0.1250 | 1.163 | 6.15 | 2.71 | 0.1250 | 29.7% | 30.5% |
| | | | Default | 0.081 | 9.08 | | | 0.081 | 8.86 | | | | |
| | | 0.25 | Cyto | 1.068 | 6.68 | 2.68 | 0.1250 | 1.089 | 6.01 | 2.66 | 0.1250 | 28.7% | 30.7% |
| | | | Default | 0.174 | 9.36 | | | 0.073 | 8.67 | | | | |
| | | 0.50 | Cyto | 1.087 | 7.09 | 2.68 | 0.1250 | 1.073 | 5.85 | 2.65 | 0.1250 | 27.4% | 31.2% |
| | | | Default | 0.170 | 9.77 | | | 0.049 | 8.50 | | | | |
| | | 1.25 | Cyto | 1.106 | 7.75 | 2.67 | 0.1250 | 0.975 | 5.49 | 2.43 | 0.1250 | 25.6% | 30.7% |
| | | | Default | 0.093 | 10.42 | | | 0.081 | 7.93 | | | | |
| | | 2.00 | Cyto | 1.113 | 8.16 | 2.68 | 0.1250 | 0.887 | 5.32 | 2.22 | 0.1250 | 24.7% | 29.4% |
| | | | Default | 0.060 | 10.84 | | | 0.058 | 7.54 | | | | |
| | | | | Average Difference | | 2.68 | | Average Difference | | 2.54 | | | |
| 2 | NHK | 0.12 | Cyto | 0.448 | 10.42 | 1.33 | 0.0322 | 0.702 | 5.21 | 1.34 | 0.0266 | 11.4% | 20.5% |
| | | | Default | 0.165 | 11.76 | | | 0.256 | 6.55 | | | | |
| | | 0.25 | Cyto | 0.395 | 10.35 | 1.29 | 0.0171 | 0.764 | 5.40 | 1.31 | 0.0327 | 11.1% | 19.5% |
| | | | Default | 0.180 | 11.64 | | | 0.313 | 6.71 | | | | |
| | | 0.50 | Cyto | 0.352 | 10.38 | 1.18 | 0.0398 | 0.739 | 5.66 | 1.22 | 0.0479 | 10.2% | 17.7% |
| | | | Default | 0.212 | 11.56 | | | 0.312 | 6.88 | | | | |
| | | 1.25 | Cyto | 0.400 | 10.26 | 1.28 | 0.0479 | 0.590 | 5.85 | 1.06 | 0.0681 | 11.1% | 15.3% |
| | | | Default | 0.156 | 11.54 | | | 0.191 | 6.91 | | | | |
| | | 2.00 | Cyto | 0.478 | 10.21 | 1.41 | 0.0398 | 0.526 | 5.77 | 1.01 | 0.0479 | 12.1% | 14.9% |
| | | | Default | 0.089 | 11.62 | | | 0.142 | 6.77 | | | | |
| | | | | Average Difference | | 1.30 | | Average Difference | | 1.19 | | | |
| | 3T3 | 0.12 | Cyto | 0.433 | 10.60 | 1.15 | 0.0479 | 0.645 | 5.39 | 1.16 | 0.0479 | 9.8% | 17.7% |
| | | | Default | 0.163 | 11.75 | | | 0.255 | 6.56 | | | | |
| | | 0.25 | Cyto | 0.471 | 10.46 | 1.19 | 0.0398 | 0.662 | 5.52 | 1.21 | 0.0398 | 10.2% | 17.9% |
| | | | Default | 0.189 | 11.64 | | | 0.314 | 6.72 | | | | |
| | | 0.50 | Cyto | 0.522 | 10.39 | 1.17 | 0.0479 | 0.647 | 5.71 | 1.18 | 0.0398 | 10.2% | 17.1% |
| | | | Default | 0.214 | 11.56 | | | 0.313 | 6.89 | | | | |
| | | 1.25 | Cyto | 0.550 | 10.30 | 1.21 | 0.0681 | 0.538 | 5.90 | 0.99 | 0.0681 | 10.5% | 14.3% |
| | | | Default | 0.148 | 11.51 | | | 0.194 | 6.89 | | | | |
| | | 2.00 | Cyto | 0.555 | 10.31 | 1.27 | 0.0574 | 0.474 | 5.82 | 0.95 | 0.0398 | 10.9% | 14.0% |
| | | | Default | 0.083 | 11.58 | | | 0.146 | 6.77 | | | | |
| | | | | Average Difference | | 1.20 | | Average Difference | | 1.10 | | | |

## Summary of Animals Used and Animals Dead for ATC Simulations by GHS Toxicity Category and NRU Test Method[1]

| Toxcat | NRU Test Method | Sigma | Starting Dose | Animals Used | | | | Animals Died | | | | % Savings - Animals Used | % Difference - Animals Died |
|---|---|---|---|---|---|---|---|---|---|---|---|---|---|
| | | | | Std. Error | Number[2] | Difference[3] | P[4] | Std. Error | Number[2] | Difference[3] | P[4] | | |
| 3 | NHK | 0.12 | Cyto | 0.489 | 9.63 | -0.20 | 0.3750 | 0.073 | 3.12 | 0.29 | 0.2749 | -2.1% | 8.4% |
| | | | Default | 0.264 | 9.44 | | | 0.217 | 3.41 | | | | |
| | | 0.25 | Cyto | 0.407 | 9.86 | 0.03 | 0.3013 | 0.138 | 3.37 | 0.44 | 0.0098 | 0.3% | 11.5% |
| | | | Default | 0.275 | 9.89 | | | 0.237 | 3.80 | | | | |
| | | 0.50 | Cyto | 0.288 | 10.39 | 0.44 | 0.1514 | 0.160 | 3.59 | 0.67 | 0.0015 | 4.0% | 15.8% |
| | | | Default | 0.207 | 10.83 | | | 0.171 | 4.26 | | | | |
| | | 1.25 | Cyto | 0.254 | 10.80 | 0.93 | 0.0122 | 0.201 | 4.19 | 0.85 | 0.0049 | 7.9% | 16.8% |
| | | | Default | 0.083 | 11.73 | | | 0.119 | 5.03 | | | | |
| | | 2.00 | Cyto | 0.290 | 10.63 | 1.19 | 0.0015 | 0.217 | 4.51 | 0.90 | 0.0015 | 10.0% | 16.6% |
| | | | Default | 0.038 | 11.82 | | | 0.091 | 5.41 | | | | |
| | | | | Average Difference | | 0.48 | | Average Difference | | 0.63 | | | |
| | 3T3 | 0.12 | Cyto | 0.110 | 9.27 | 0.15 | 0.7520 | 0.102 | 3.18 | 0.23 | 0.9097 | 1.6% | 6.6% |
| | | | Default | 0.258 | 9.42 | | | 0.213 | 3.40 | | | | |
| | | 0.25 | Cyto | 0.153 | 9.65 | 0.25 | 0.1475 | 0.171 | 3.49 | 0.31 | 0.0830 | 2.5% | 8.1% |
| | | | Default | 0.271 | 9.90 | | | 0.237 | 3.80 | | | | |
| | | 0.50 | Cyto | 0.172 | 10.39 | 0.42 | 0.0522 | 0.170 | 3.81 | 0.45 | 0.0425 | 3.9% | 10.5% |
| | | | Default | 0.202 | 10.81 | | | 0.169 | 4.26 | | | | |
| | | 1.25 | Cyto | 0.237 | 11.05 | 0.69 | 0.0425 | 0.202 | 4.45 | 0.59 | 0.0361 | 5.8% | 11.8% |
| | | | Default | 0.084 | 11.73 | | | 0.119 | 5.04 | | | | |
| | | 2.00 | Cyto | 0.261 | 11.03 | 0.77 | 0.0640 | 0.198 | 4.82 | 0.59 | 0.0522 | 6.5% | 10.9% |
| | | | Default | 0.037 | 11.80 | | | 0.095 | 5.41 | | | | |
| | | | | Average Difference | | 0.45 | | Average Difference | | 0.43 | | | |
| 4 | NHK | 0.12 | Cyto | 0.625 | 10.11 | -0.85 | 0.1133 | 0.069 | 3.05 | -0.01 | 0.1627 | -9.2% | -0.2% |
| | | | Default | 0.098 | 9.26 | | | 0.067 | 3.04 | | | | |
| | | 0.25 | Cyto | 0.560 | 10.14 | -0.71 | 0.1089 | 0.093 | 3.14 | -0.02 | 0.0013 | -7.5% | -0.7% |
| | | | Default | 0.095 | 9.43 | | | 0.092 | 3.12 | | | | |
| | | 0.50 | Cyto | 0.494 | 10.37 | -0.60 | 0.7960 | 0.062 | 3.18 | -0.001 | 0.9229 | -6.1% | 0.1% |
| | | | Default | 0.062 | 9.77 | | | 0.057 | 3.18 | | | | |
| | | 1.25 | Cyto | 0.290 | 10.88 | -0.31 | 0.0730 | 0.051 | 3.66 | 0.04 | 0.5520 | -2.9% | 1.2% |
| | | | Default | 0.043 | 10.57 | | | 0.067 | 3.70 | | | | |
| | | 2.00 | Cyto | 0.095 | 11.13 | -0.03 | 0.6051 | 0.061 | 4.08 | 0.08 | 0.5871 | -0.3% | 1.9% |
| | | | Default | 0.048 | 11.10 | | | 0.080 | 4.16 | | | | |
| | | | | Average Difference | | -0.50 | | Average Difference | | 0.02 | | | |
| | 3T3 | 0.12 | Cyto | 0.619 | 10.56 | -1.30 | 0.0210 | 0.070 | 3.05 | -0.01 | 0.5520 | -14.0% | -0.2% |
| | | | Default | 0.102 | 9.26 | | | 0.068 | 3.04 | | | | |
| | | 0.25 | Cyto | 0.543 | 10.52 | -1.09 | 0.0806 | 0.093 | 3.13 | 0.00 | 0.4690 | -11.6% | 0.0% |
| | | | Default | 0.098 | 9.42 | | | 0.095 | 3.13 | | | | |
| | | 0.50 | Cyto | 0.483 | 10.67 | -0.92 | 0.0262 | 0.060 | 3.20 | -0.02 | 0.0787 | -9.5% | -0.7% |
| | | | Default | 0.065 | 9.75 | | | 0.056 | 3.18 | | | | |
| | | 1.25 | Cyto | 0.283 | 10.99 | -0.42 | 0.0038 | 0.057 | 3.64 | 0.07 | 0.0787 | -4.0% | 1.9% |
| | | | Default | 0.040 | 10.57 | | | 0.069 | 3.71 | | | | |
| | | 2.00 | Cyto | 0.099 | 11.11 | 0.00 | 0.8040 | 0.062 | 4.02 | 0.15 | 0.0832 | 0.0% | 3.6% |
| | | | Default | 0.047 | 11.11 | | | 0.077 | 4.17 | | | | |
| | | | | Average Difference | | -0.75 | | Average Difference | | 0.04 | | | |

## Summary of Animals Used and Animals Dead for ATC Simulations by GHS Toxicity Category and NRU Test Method[1]

| Toxcat | NRU Test Method | Sigma | Starting Dose | Animals Used | | | | Animals Died | | | | % Savings - Animals Used | % Difference - Animals Died |
|---|---|---|---|---|---|---|---|---|---|---|---|---|---|
| | | | | Std. Error | Number[2] | Difference[3] | P[4] | Std. Error | Number[2] | Difference[3] | P[4] | | |
| 5 | NHK | 0.12 | Cyto | 0.148 | 11.89 | -0.02 | 0.6328 | 0.185 | 0.39 | 0.001 | 0.6953 | -0.2% | 0.2% |
| | | | Default | 0.101 | 11.87 | | | 0.189 | 0.39 | | | | |
| | | 0.25 | Cyto | 0.138 | 11.65 | -0.02 | 0.6250 | 0.157 | 1.10 | -0.02 | 0.0625 | -0.2% | -1.5% |
| | | | Default | 0.119 | 11.63 | | | 0.157 | 1.08 | | | | |
| | | 0.50 | Cyto | 0.119 | 11.25 | -0.03 | 0.3750 | 0.096 | 1.82 | 0.00 | 1.0000 | -0.3% | 0.0% |
| | | | Default | 0.083 | 11.22 | | | 0.097 | 1.82 | | | | |
| | | 1.25 | Cyto | 0.062 | 10.81 | -0.04 | 0.7695 | 0.040 | 2.89 | -0.01 | 0.6426 | -0.4% | -0.2% |
| | | | Default | 0.038 | 10.77 | | | 0.041 | 2.89 | | | | |
| | | 2.00 | Cyto | 0.041 | 10.87 | -0.04 | 0.2422 | 0.033 | 3.36 | -0.01 | 0.6250 | -0.3% | -0.2% |
| | | | Default | 0.011 | 10.83 | | | 0.026 | 3.35 | | | | |
| | | | | Average Difference | | -0.03 | | Average Difference | | -0.01 | | | |
| | 3T3 | 0.12 | Cyto | 0.096 | 11.77 | 0.11 | 0.0781 | 0.188 | 0.39 | 0.005 | 0.2324 | 0.9% | 1.2% |
| | | | Default | 0.103 | 11.88 | | | 0.188 | 0.39 | | | | |
| | | 0.25 | Cyto | 0.113 | 11.53 | 0.09 | 0.4316 | 0.155 | 1.10 | -0.01 | 0.3848 | 0.8% | -0.8% |
| | | | Default | 0.117 | 11.62 | | | 0.158 | 1.09 | | | | |
| | | 0.50 | Cyto | 0.080 | 11.14 | 0.08 | 0.0645 | 0.098 | 1.82 | -0.002 | 0.8457 | 0.7% | -0.1% |
| | | | Default | 0.083 | 11.22 | | | 0.093 | 1.82 | | | | |
| | | 1.25 | Cyto | 0.039 | 10.75 | 0.02 | 0.6953 | 0.043 | 2.87 | 0.01 | 1.0000 | 0.2% | 0.2% |
| | | | Default | 0.037 | 10.77 | | | 0.041 | 2.88 | | | | |
| | | 2.00 | Cyto | 0.018 | 10.84 | 0.01 | 0.6953 | 0.032 | 3.36 | -0.005 | 0.6250 | 0.1% | -0.1% |
| | | | Default | 0.010 | 10.85 | | | 0.027 | 3.35 | | | | |
| | | | | Average Difference | | 0.06 | | Average Difference | | -0.001 | | | |
| 6 | NHK | 0.12 | Cyto | 0.804 | 9.34 | 2.66 | 0.0195 | 0.0002 | 0.0004 | 0.00004 | 1.0000 | 22.2% | 9.1% |
| | | | Default | 0.000 | 12.00 | | | 0.0002 | 0.0004 | | | | |
| | | 0.25 | Cyto | 0.801 | 9.35 | 2.65 | 0.0322 | 0.033 | 0.11 | -0.002 | 0.4824 | 22.1% | -1.6% |
| | | | Default | 0.002 | 11.99 | | | 0.033 | 0.10 | | | | |
| | | 0.50 | Cyto | 0.732 | 9.43 | 2.43 | 0.0024 | 0.099 | 0.73 | 0.01 | 0.0398 | 20.5% | 1.2% |
| | | | Default | 0.034 | 11.86 | | | 0.099 | 0.73 | | | | |
| | | 1.25 | Cyto | 0.462 | 9.70 | 1.53 | 0.0024 | 0.106 | 2.14 | 0.12 | 0.0479 | 13.6% | 5.5% |
| | | | Default | 0.058 | 11.23 | | | 0.086 | 2.27 | | | | |
| | | 2.00 | Cyto | 0.288 | 10.06 | 0.92 | 0.0105 | 0.080 | 2.85 | 0.08 | 0.1465 | 8.4% | 2.7% |
| | | | Default | 0.031 | 10.98 | | | 0.053 | 2.93 | | | | |
| | | | | Average Difference | | 2.04 | | Average Difference | | 0.04 | | | |
| | 3T3 | 0.12 | Cyto | 0.842 | 9.81 | 2.19 | 0.0195 | 0.0002 | 0.004 | -0.001 | 0.7500 | 18.3% | -25.0% |
| | | | Default | 0.000 | 12.00 | | | 0.0002 | 0.003 | | | | |
| | | 0.25 | Cyto | 0.839 | 9.80 | 2.19 | 0.0137 | 0.034 | 0.11 | 0.003 | 0.2334 | 18.3% | 2.3% |
| | | | Default | 0.002 | 11.99 | | | 0.035 | 0.12 | | | | |
| | | 0.50 | Cyto | 0.779 | 9.82 | 2.03 | 0.0210 | 0.107 | 0.74 | -0.002 | 0.6773 | 17.1% | -0.3% |
| | | | Default | 0.035 | 11.85 | | | 0.106 | 0.74 | | | | |
| | | 1.25 | Cyto | 0.509 | 9.98 | 1.24 | 0.0522 | 0.110 | 2.17 | 0.11 | 0.0923 | 11.0% | 4.6% |
| | | | Default | 0.060 | 11.22 | | | 0.096 | 2.27 | | | | |
| | | 2.00 | Cyto | 0.332 | 10.19 | 0.79 | 0.0425 | 0.091 | 2.86 | 0.09 | 0.0425 | 7.2% | 3.0% |
| | | | Default | 0.029 | 10.99 | | | 0.057 | 2.95 | | | | |
| | | | | Average Difference | | 1.69 | | Average Difference | | 0.04 | | | |

Abbreviations: ATC=Acute Toxic Class method (OECD 2001d); Toxcat=Category from Globally Harmonized System of Classification and Labeling of Chemicals[5] (GHS; UN 2005); NRU=Neutral red uptake; Sigma=Reciprocal of dose-mortality slope; Cyto=NRU-determined starting dose (i.e., one dose lower than the $LD_{50}$ predicted by the NRU $IC_{50}$ in the RC rat-only millimole regression (log $LD_{50}$ [mmol/kg] = 0.439 log $IC_{50}$ [mM] + 0.621); Default=Default starting dose of 300 mg/kg; Std. Error=Standard error for number of animals; 3T3= BALB/c 3T3 mouse fibroblasts; NHK=Normal human epidermal keratinocytes; RC=Registry of Cytotoxicity..

[1]For 2000 ATC simulations at each starting dose and dose-mortality slope for 67 substances in the 3T3 NRU test method and 68 substances in the NHK NRU test method. Upper limit dose =2000 mg/kg.

[2]Mean number of animals for 2000 simulations.

[3]Difference between mean animals used for the default starting dose and mean animals used for the NRU-based starting dose.

[4]P-value is from one-side Wilcoxon signed rank test for difference in animals between the default and NRU-based starting doses. Significant values at $p < 0.05$.

| [5]GHS Toxicity Category | Oral $LD_{50}$ Limits |
|---|---|
| 1 | $LD_{50} \leq 5$ mg/kg |
| 2 | $5 < LD_{50} \leq 50$ mg/kg |
| 3 | $50 < LD_{50} \leq 300$ mg/kg |
| 4 | $300 < LD_{50} \leq 2000$ mg/kg |
| 5 | $2000 < LD_{50} \leq 5000$ mg/kg |
| 6 | $LD_{50} > 5000$ mg/kg |

## Concordance of NRU-Based Starting Dose with Default Starting Dose for GHS Acute Oral Toxicity Category Outcome for ATC Simulations[1]

| GHS Category Outcome with Default Starting Dose | GHS Category Outcome with NHK NRU-Based Starting Dose | | | | | | | | | |
|---|---|---|---|---|---|---|---|---|---|---|
| | 1 | 2 | 3 | 4 | 5 | 6 | Total | Category Match | Higher NRU Category | Lower NRU Category |
| **1** | 8 | 0 | 0 | 0 | 0 | 0 | 8 | 100% | 0% | 0% |
| **2** | 0 | 11 | 0 | 0 | 0 | 0 | 11 | 100% | 0% | 0% |
| **3** | 0 | 1 | 13 | 0 | 0 | 0 | 14 | 93% | 0% | 7% |
| **4** | 0 | 0 | 0 | 13 | 0 | 0 | 13 | 100% | 0% | 0% |
| **5** | 0 | 0 | 0 | 0 | 21 | 0 | 21 | 100% | 0% | 0% |
| **6** | 0 | 0 | 0 | 0 | 0 | 1 | 1 | 100% | 0% | 0% |
| **Total** | 8 | 12 | 13 | 13 | 21 | 1 | 68 | 99% | 0% | 1% |

| GHS Category Outcome with Default Starting Dose | GHS Category Outcome with 3T3 NRU-Based Starting Dose | | | | | | | | | |
|---|---|---|---|---|---|---|---|---|---|---|
| | 1 | 2 | 3 | 4 | 5 | 6 | Total | Category Match | Higher NRU Category | Lower NRU Category |
| **1** | 8 | 0 | 0 | 0 | 0 | 0 | 8 | 100% | 0% | 0% |
| **2** | 0 | 11 | 0 | 0 | 0 | 0 | 11 | 100% | 0% | 0% |
| **3** | 0 | 0 | 15 | 0 | 0 | 0 | 15 | 100% | 0% | 0% |
| **4** | 0 | 0 | 1 | 11 | 0 | 0 | 12 | 92% | 0% | 8% |
| **5** | 0 | 0 | 0 | 0 | 20 | 0 | 20 | 100% | 0% | 0% |
| **6** | 0 | 0 | 0 | 0 | 0 | 1 | 1 | 100% | 0% | 0% |
| **Total** | 8 | 11 | 16 | 11 | 20 | 1 | 67 | 99% | 0% | 1% |

Abbreviations: NRU=Neutral red uptake; GHS=Globally Harmonized System of Classification and Labelling of Chemicals (UN 2005); ATC=Acute Toxic Class method (OECD 2001d); NHK=Normal human epidermal keratinocytes; 3T3= BALB/c 3T3 mouse fibroblasts; RC=Registry of Cytotoxicity.

[1]For 2000 UDP simulations at each starting dose and dose-mortality slope for 67 substances in the 3T3 NRU test method and 68 substances in the NHK NRU test method. Upper limit dose =2000 mg/kg. The NRU-based starting dose was one dose lower than the $LD_{50}$ predicted by the NRU $IC_{50}$ in the RC rat-only millimole regression (log $LD_{50}$ [mmol/kg] = 0.439 log $IC_{50}$ [mM] + 0.621). The default starting dose = 300 mg/kg. Shaded cells are those containing the correct predictions.

| [2]GHS Toxicity Category | Oral $LD_{50}$ Limits |
|---|---|
| 1 | $LD_{50} \leq 5$ mg/kg |
| 2 | $5 < LD_{50} \leq 50$ mg/kg |
| 3 | $50 < LD_{50} \leq 300$ mg/kg |
| 4 | $300 < LD_{50} \leq 2000$ mg/kg |
| 5 | $2000 < LD_{50} \leq 5000$ mg/kg |
| 6 | $LD_{50} > 5000$ mg/kg |

## Discordant Substances[1] for GHS Category[2] Outcomes of ATC Simulations

| NRU Test Method | Substance | NRU-Based Starting Dose[3] Toxicity Category | Default Starting Dose[4] Toxicity Category |
|---|---|---|---|
| 3T3 | Cupric sulfate pentahydrate | 3 | 4 |
| NHK | Hexachlorophene | 2 | 3 |

Abbreviations: GHS=Globally Harmonized System of Classification and Labelling of Chemicals (UN 2005); ATC= Acute Toxic Class method (OECD 2001d): NRU=Neutral red uptake; 3T3=BALB/c 3T3 mouse fibroblasts; NHK=Normal human epidermal keratinocytes.

[1]Substances for which the simulated ATC outcome for the NRU-based starting dose did not match the simulated ATC outcome for the default starting dose. Simulations were performed with 2000 runs at each starting dose and dose-mortality slope for 67 substances in the 3T3 NRU test method and 68 substances in the NHK NRU test method. Upper limit dose =2000 mg/kg.

| [2]GHS Toxicity Category | Oral $LD_{50}$ Limits |
|---|---|
| 1 | $LD_{50} \leq 5$ mg/kg |
| 2 | $5 < LD_{50} \leq 50$ mg/kg |
| 3 | $50 < LD_{50} \leq 300$ mg/kg |
| 4 | $300 < LD_{50} \leq 2000$ mg/kg |
| 5 | $2000 < LD_{50} \leq 5000$ mg/kg |
| 6 | $LD_{50} > 5000$ mg/kg |

[3]NRU-based starting dose was one dose lower than the $LD_{50}$ predicted by the NRU $IC_{50}$ in the RC rat-only millimole regression (log $LD_{50}$ [mmol/kg] = 0.439 log $IC_{50}$ [mM] + 0.621).

[4]The default starting dose = 300 mg/kg.

***[This Page Intentionally Left Blank]***

# Appendix N4

## ATC Simulation Results Starting at the Next Fixed Dose Below the $LD_{50}$ Predicted by the 3T3 and NHK NRU $IC_{50}$ and the RC Rat-Only Weight Regression - 2000 mg/kg Upper Limit Dose

***[This Page Intentionally Left Blank]***

## Summary of Animals Used and Animals Dead for ATC Simulations by NRU Test Method[1]

| NRU Test Method | Sigma | Starting Dose | Animals Used | | | | Animals Died | | | | % Savings - Animals Used | % Difference - Animals Died |
|---|---|---|---|---|---|---|---|---|---|---|---|---|
| | | | Std. Error | Number[2] | Difference[3] | P[4] | Std. Error | Number[2] | Difference[3] | P[4] | | |
| NHK | 0.12 | Cyto | 0.297 | 9.75 | 0.91 | 0.0025 | 0.280 | 2.67 | 0.48 | 0.0999 | 8.6% | 15.2% |
| | | Default | 0.169 | 10.67 | | | 0.334 | 3.15 | | | | |
| | 0.25 | Cyto | 0.274 | 9.77 | 0.98 | 0.0015 | 0.276 | 2.88 | 0.50 | 0.3451 | 9.1% | 14.7% |
| | | Default | 0.149 | 10.75 | | | 0.324 | 3.38 | | | | |
| | 0.50 | Cyto | 0.242 | 9.95 | 0.96 | 0.0000 | 0.254 | 3.21 | 0.52 | 0.0030 | 8.8% | 13.8% |
| | | Default | 0.114 | 10.91 | | | 0.297 | 3.72 | | | | |
| | 1.25 | Cyto | 0.180 | 10.24 | 0.86 | 0.0005 | 0.193 | 3.86 | 0.54 | 0.0000 | 7.8% | 12.3% |
| | | Default | 0.068 | 11.10 | | | 0.228 | 4.40 | | | | |
| | 2.00 | Cyto | 0.152 | 10.39 | 0.86 | 0.0000 | 0.160 | 4.19 | 0.53 | 0.0001 | 7.6% | 11.3% |
| | | Default | 0.050 | 11.25 | | | 0.189 | 4.73 | | | | |
| | | | Average Difference | | 0.91 | | Average Difference | | 0.51 | | | |
| 3T3 | 0.12 | Cyto | 0.293 | 9.55 | 1.09 | 0.0006 | 0.283 | 2.73 | 0.47 | 0.0001 | 10.2% | 14.6% |
| | | Default | 0.170 | 10.64 | | | 0.335 | 3.20 | | | | |
| | 0.25 | Cyto | 0.273 | 9.61 | 1.11 | 0.0002 | 0.275 | 2.95 | 0.48 | 0.0024 | 10.4% | 14.1% |
| | | Default | 0.151 | 10.73 | | | 0.325 | 3.43 | | | | |
| | 0.50 | Cyto | 0.244 | 9.85 | 1.04 | 0.0001 | 0.251 | 3.27 | 0.50 | 0.0007 | 9.6% | 13.2% |
| | | Default | 0.115 | 10.89 | | | 0.299 | 3.77 | | | | |
| | 1.25 | Cyto | 0.187 | 10.22 | 0.88 | 0.0000 | 0.192 | 3.93 | 0.51 | 0.0000 | 7.9% | 11.4% |
| | | Default | 0.067 | 11.10 | | | 0.228 | 4.43 | | | | |
| | 2.00 | Cyto | 0.153 | 10.43 | 0.81 | 0.0000 | 0.160 | 4.27 | 0.49 | 0.0000 | 7.2% | 10.3% |
| | | Default | 0.049 | 11.25 | | | 0.190 | 4.76 | | | | |
| | | | Average Difference | | 0.99 | | Average Difference | | 0.49 | | | |

Abbreviations: ATC=Acute Toxic Class method (OECD 2001d); NRU=Neutral red uptake; Sigma=Reciprocal of dose-mortality slope; Cyto=NRU-determined starting dose (i.e., one dose lower than the $LD_{50}$ predicted by the NRU $IC_{50}$ in the RC rat-only weight regression (log $LD_{50}$ [mg/kg] = 0.372 log $IC_{50}$ [□g/mL] + 2.024); Default=Default starting dose of 300 mg/kg; Std. Error=Standard error for number of animals; NHK=Normal human epidermal keratinocytes; 3T3= BALB/c 3T3 mouse fibroblasts; RC=Registry of Cytotoxicity.

[1]For 2000 ATC simulations at each starting dose and dose-mortality slope for 67 substances in the 3T3 NRU test method and 68 substances in the NHK NRU test method. Upper limit dose =2000 mg/kg.

[2]Mean number of animals for 2000 simulations.

[3]Difference between mean number of animals for the default starting dose and mean number of animals for the NRU-based starting dose.

[4]P-value is from one-sided Wilcoxon signed rank test for difference in animals between the default and NRU-based starting doses. Significant values at $p < 0.05$.

## Summary of Animals Used and Animals Dead for ATC Simulations by GHS Toxicity Category and NRU Test Method[1]

| Toxcat | NRU Test Method | Sigma | Starting Dose | Animals Used | | | | Animals Died | | | | % Savings - Animals Used | % Difference - Animals Died |
|---|---|---|---|---|---|---|---|---|---|---|---|---|---|
| | | | | Std. Error | Number[2] | Difference[3] | P[4] | Std. Error | Number[2] | Difference[3] | P[4] | | |
| 1 | NHK | 0.12 | Cyto | 1.195 | 6.18 | 2.91 | 0.1250 | 1.180 | 5.96 | 2.91 | 0.1250 | 32.0% | 32.8% |
| | | | Default | 0.083 | 9.09 | | | 0.080 | 8.86 | | | | |
| | | 0.25 | Cyto | 1.250 | 6.45 | 2.91 | 0.2500 | 1.156 | 5.77 | 2.90 | 0.2500 | 31.1% | 33.5% |
| | | | Default | 0.178 | 9.35 | | | 0.070 | 8.67 | | | | |
| | | 0.50 | Cyto | 1.277 | 6.87 | 2.87 | 0.2500 | 1.157 | 5.61 | 2.89 | 0.1250 | 29.4% | 34.0% |
| | | | Default | 0.158 | 9.74 | | | 0.060 | 8.50 | | | | |
| | | 1.25 | Cyto | 1.215 | 7.52 | 2.87 | 0.2500 | 1.033 | 5.26 | 2.66 | 0.1250 | 27.6% | 33.6% |
| | | | Default | 0.111 | 10.39 | | | 0.066 | 7.92 | | | | |
| | | 2.00 | Cyto | 1.225 | 7.94 | 2.90 | 0.2500 | 0.940 | 5.10 | 2.41 | 0.1250 | 26.8% | 32.1% |
| | | | Default | 0.066 | 10.85 | | | 0.052 | 7.51 | | | | |
| | | | | Average Difference | | 2.89 | | Average Difference | | 2.75 | | | |
| | 3T3 | 0.12 | Cyto | 0.987 | 6.85 | 2.24 | 0.1250 | 1.057 | 6.62 | 2.24 | 0.1250 | 24.6% | 25.3% |
| | | | Default | 0.081 | 9.08 | | | 0.081 | 8.86 | | | | |
| | | 0.25 | Cyto | 0.980 | 7.12 | 2.24 | 0.1250 | 1.008 | 6.44 | 2.23 | 0.1250 | 23.9% | 25.7% |
| | | | Default | 0.174 | 9.36 | | | 0.073 | 8.67 | | | | |
| | | 0.50 | Cyto | 1.029 | 7.56 | 2.21 | 0.1250 | 0.998 | 6.28 | 2.22 | 0.1250 | 22.6% | 26.1% |
| | | | Default | 0.170 | 9.77 | | | 0.049 | 8.50 | | | | |
| | | 1.25 | Cyto | 1.011 | 8.16 | 2.26 | 0.1250 | 0.911 | 5.89 | 2.04 | 0.1250 | 21.7% | 25.7% |
| | | | Default | 0.093 | 10.42 | | | 0.081 | 7.93 | | | | |
| | | 2.00 | Cyto | 1.017 | 8.61 | 2.22 | 0.1250 | 0.841 | 5.68 | 1.86 | 0.1250 | 20.5% | 24.7% |
| | | | Default | 0.060 | 10.84 | | | 0.058 | 7.54 | | | | |
| | | | | Average Difference | | 2.23 | | Average Difference | | 2.12 | | | |
| 2 | NHK | 0.12 | Cyto | 0.333 | 10.40 | 1.36 | 0.0049 | 0.618 | 5.20 | 1.36 | 0.0144 | 11.5% | 20.7% |
| | | | Default | 0.165 | 11.76 | | | 0.256 | 6.55 | | | | |
| | | 0.25 | Cyto | 0.266 | 10.31 | 1.33 | 0.0034 | 0.690 | 5.38 | 1.33 | 0.0046 | 11.5% | 19.8% |
| | | | Default | 0.180 | 11.64 | | | 0.313 | 6.71 | | | | |
| | | 0.50 | Cyto | 0.192 | 10.31 | 1.25 | 0.0061 | 0.668 | 5.66 | 1.22 | 0.0134 | 10.8% | 17.8% |
| | | | Default | 0.212 | 11.56 | | | 0.312 | 6.88 | | | | |
| | | 1.25 | Cyto | 0.261 | 10.21 | 1.33 | 0.0105 | 0.504 | 5.82 | 1.09 | 0.0046 | 11.5% | 15.8% |
| | | | Default | 0.156 | 11.54 | | | 0.191 | 6.91 | | | | |
| | | 2.00 | Cyto | 0.344 | 10.21 | 1.41 | 0.0034 | 0.438 | 5.74 | 1.03 | 0.0012 | 12.1% | 15.3% |
| | | | Default | 0.089 | 11.62 | | | 0.142 | 6.77 | | | | |
| | | | | Average Difference | | 1.33 | | Average Difference | | 1.21 | | | |
| | 3T3 | 0.12 | Cyto | 0.329 | 10.27 | 1.48 | 0.0061 | 0.597 | 5.06 | 1.49 | 0.0024 | 12.6% | 22.8% |
| | | | Default | 0.163 | 11.75 | | | 0.255 | 6.56 | | | | |
| | | 0.25 | Cyto | 0.350 | 10.13 | 1.51 | 0.0024 | 0.645 | 5.19 | 1.53 | 0.0024 | 13.0% | 22.8% |
| | | | Default | 0.189 | 11.64 | | | 0.314 | 6.72 | | | | |
| | | 0.50 | Cyto | 0.384 | 10.06 | 1.51 | 0.0061 | 0.630 | 5.41 | 1.48 | 0.0022 | 13.0% | 21.5% |
| | | | Default | 0.214 | 11.56 | | | 0.313 | 6.89 | | | | |
| | | 1.25 | Cyto | 0.425 | 9.98 | 1.52 | 0.0061 | 0.486 | 5.64 | 1.25 | 0.0061 | 13.2% | 18.2% |
| | | | Default | 0.148 | 11.51 | | | 0.194 | 6.89 | | | | |
| | | 2.00 | Cyto | 0.445 | 10.03 | 1.55 | 0.0046 | 0.426 | 5.60 | 1.17 | 0.0024 | 13.4% | 17.3% |
| | | | Default | 0.083 | 11.58 | | | 0.146 | 6.77 | | | | |
| | | | | Average Difference | | 1.51 | | Average Difference | | 1.39 | | | |

## Summary of Animals Used and Animals Dead for ATC Simulations by GHS Toxicity Category and NRU Test Method[1]

| Toxcat | NRU Test Method | Sigma | Starting Dose | Animals Used | | | | Animals Died | | | | % Savings - Animals Used | % Difference - Animals Died |
|---|---|---|---|---|---|---|---|---|---|---|---|---|---|
| | | | | Std. Error | Number[2] | Difference[3] | P[4] | Std. Error | Number[2] | Difference[3] | P[4] | | |
| 3 | NHK | 0.12 | Cyto | 0.489 | 9.63 | -0.20 | 0.4688 | 0.073 | 3.12 | 0.28 | 0.0713 | -2.1% | 8.3% |
| | | | Default | 0.264 | 9.44 | | | 0.217 | 3.41 | | | | |
| | | 0.25 | Cyto | 0.407 | 9.86 | 0.04 | 0.3013 | 0.139 | 3.35 | 0.45 | 0.0210 | 0.4% | 11.8% |
| | | | Default | 0.275 | 9.89 | | | 0.237 | 3.80 | | | | |
| | | 0.50 | Cyto | 0.279 | 10.41 | 0.42 | 0.1099 | 0.155 | 3.62 | 0.64 | 0.0093 | 3.8% | 15.1% |
| | | | Default | 0.207 | 10.83 | | | 0.171 | 4.26 | | | | |
| | | 1.25 | Cyto | 0.248 | 10.91 | 0.82 | 0.0342 | 0.193 | 4.27 | 0.76 | 0.0210 | 7.0% | 15.1% |
| | | | Default | 0.083 | 11.73 | | | 0.119 | 5.03 | | | | |
| | | 2.00 | Cyto | 0.302 | 10.74 | 1.09 | 0.0034 | 0.218 | 4.60 | 0.81 | 0.0342 | 9.2% | 15.1% |
| | | | Default | 0.038 | 11.82 | | | 0.091 | 5.41 | | | | |
| | | | | Average Difference | | 0.43 | | Average Difference | | 0.59 | | | |
| | 3T3 | 0.12 | Cyto | 0.099 | 9.20 | 0.22 | 0.2647 | 0.104 | 3.17 | 0.23 | 0.1294 | 2.4% | 6.7% |
| | | | Default | 0.258 | 9.42 | | | 0.213 | 3.40 | | | | |
| | | 0.25 | Cyto | 0.155 | 9.60 | 0.31 | 0.0449 | 0.165 | 3.50 | 0.30 | 0.1060 | 3.1% | 7.9% |
| | | | Default | 0.271 | 9.90 | | | 0.237 | 3.80 | | | | |
| | | 0.50 | Cyto | 0.176 | 10.35 | 0.47 | 0.0225 | 0.160 | 3.83 | 0.43 | 0.0522 | 4.3% | 10.1% |
| | | | Default | 0.202 | 10.81 | | | 0.169 | 4.26 | | | | |
| | | 1.25 | Cyto | 0.228 | 11.11 | 0.62 | 0.0210 | 0.180 | 4.51 | 0.52 | 0.0210 | 5.3% | 10.4% |
| | | | Default | 0.084 | 11.73 | | | 0.119 | 5.04 | | | | |
| | | 2.00 | Cyto | 0.253 | 11.09 | 0.71 | 0.0449 | 0.186 | 4.88 | 0.53 | 0.0640 | 6.0% | 9.8% |
| | | | Default | 0.037 | 11.80 | | | 0.095 | 5.41 | | | | |
| | | | | Average Difference | | 0.47 | | Average Difference | | 0.40 | | | |
| 4 | NHK | 0.12 | Cyto | 0.645 | 10.23 | -0.97 | 0.1445 | 0.068 | 3.045 | -0.005 | 0.2444 | -10.4% | -0.1% |
| | | | Default | 0.098 | 9.26 | | | 0.067 | 3.040 | | | | |
| | | 0.25 | Cyto | 0.565 | 10.23 | -0.80 | 0.1089 | 0.093 | 3.13 | -0.01 | 0.0229 | -8.5% | -0.4% |
| | | | Default | 0.095 | 9.43 | | | 0.092 | 3.12 | | | | |
| | | 0.50 | Cyto | 0.500 | 10.46 | -0.69 | 0.6416 | 0.058 | 3.20 | -0.02 | 0.0744 | -7.1% | -0.6% |
| | | | Default | 0.062 | 9.77 | | | 0.057 | 3.18 | | | | |
| | | 1.25 | Cyto | 0.296 | 10.91 | -0.34 | 0.0256 | 0.057 | 3.64 | 0.06 | 0.3259 | -3.3% | 1.6% |
| | | | Default | 0.043 | 10.57 | | | 0.067 | 3.70 | | | | |
| | | 2.00 | Cyto | 0.093 | 11.12 | -0.02 | 0.4851 | 0.070 | 4.04 | 0.13 | 0.6791 | -0.2% | 3.0% |
| | | | Default | 0.048 | 11.10 | | | 0.080 | 4.16 | | | | |
| | | | | Average Difference | | -0.57 | | Average Difference | | 0.03 | | | |
| | 3T3 | 0.12 | Cyto | 0.664 | 10.65 | -1.39 | 0.0762 | 0.068 | 3.04 | 0.00 | 0.8160 | -15.0% | 0.0% |
| | | | Default | 0.102 | 9.26 | | | 0.068 | 3.04 | | | | |
| | | 0.25 | Cyto | 0.586 | 10.56 | -1.14 | 0.0437 | 0.094 | 3.13 | 0.00 | 0.5871 | -12.1% | 0.0% |
| | | | Default | 0.098 | 9.42 | | | 0.095 | 3.13 | | | | |
| | | 0.50 | Cyto | 0.496 | 10.67 | -0.93 | 0.0229 | 0.057 | 3.18 | -0.01 | 0.4691 | -9.5% | -0.2% |
| | | | Default | 0.065 | 9.75 | | | 0.056 | 3.18 | | | | |
| | | 1.25 | Cyto | 0.279 | 10.95 | -0.38 | 0.0928 | 0.053 | 3.62 | 0.08 | 0.1208 | -3.6% | 2.2% |
| | | | Default | 0.040 | 10.57 | | | 0.069 | 3.71 | | | | |
| | | 2.00 | Cyto | 0.105 | 11.12 | -0.01 | 0.4212 | 0.061 | 4.00 | 0.17 | 0.1089 | -0.1% | 4.2% |
| | | | Default | 0.047 | 11.11 | | | 0.077 | 4.17 | | | | |
| | | | | Average Difference | | -0.77 | | Average Difference | | 0.05 | | | |

## Summary of Animals Used and Animals Dead for ATC Simulations by GHS Toxicity Category and NRU Test Method[1]

| Toxcat | NRU Test Method | Sigma | Starting Dose | Animals Used | | | | Animals Died | | | | % Savings - Animals Used | % Difference - Animals Died |
|---|---|---|---|---|---|---|---|---|---|---|---|---|---|
| | | | | Std. Error | Number[2] | Difference[3] | P[4] | Std. Error | Number[2] | Difference[3] | P[4] | | |
| 5 | NHK | 0.12 | Cyto | 0.604 | 11.03 | 0.84 | 0.8867 | 0.188 | 0.393 | -0.003 | 0.1055 | 7.1% | -0.9% |
| | | | Default | 0.101 | 11.87 | | | 0.189 | 0.390 | | | | |
| | | 0.25 | Cyto | 0.528 | 10.88 | 0.75 | 0.3223 | 0.156 | 1.10 | -0.02 | 0.0098 | 6.4% | -1.8% |
| | | | Default | 0.119 | 11.63 | | | 0.157 | 1.08 | | | | |
| | | 0.50 | Cyto | 0.365 | 10.69 | 0.53 | 0.1523 | 0.098 | 1.819 | -0.002 | 0.7891 | 4.7% | -0.1% |
| | | | Default | 0.083 | 11.22 | | | 0.097 | 1.817 | | | | |
| | | 1.25 | Cyto | 0.175 | 10.52 | 0.24 | 0.1934 | 0.041 | 2.87 | 0.01 | 0.3223 | 2.2% | 0.5% |
| | | | Default | 0.038 | 10.77 | | | 0.041 | 2.89 | | | | |
| | | 2.00 | Cyto | 0.094 | 10.69 | 0.14 | 0.1934 | 0.034 | 3.37 | -0.01 | 0.7695 | 1.3% | -0.3% |
| | | | Default | 0.011 | 10.83 | | | 0.026 | 3.35 | | | | |
| | | | | Average Difference | | 0.50 | | Average Difference | | 0.00 | | | |
| | 3T3 | 0.12 | Cyto | 0.876 | 9.44 | 2.43 | 0.0742 | 0.184 | 0.38 | 0.01 | 0.1856 | 20.5% | 2.1% |
| | | | Default | 0.103 | 11.88 | | | 0.188 | 0.39 | | | | |
| | | 0.25 | Cyto | 0.751 | 9.54 | 2.08 | 0.1934 | 0.150 | 1.09 | -0.01 | 0.5566 | 17.9% | -0.5% |
| | | | Default | 0.117 | 11.62 | | | 0.158 | 1.09 | | | | |
| | | 0.50 | Cyto | 0.514 | 9.80 | 1.43 | 0.0273 | 0.095 | 1.80 | 0.02 | 0.0488 | 12.7% | 1.1% |
| | | | Default | 0.083 | 11.22 | | | 0.093 | 1.82 | | | | |
| | | 1.25 | Cyto | 0.260 | 10.08 | 0.69 | 0.0273 | 0.052 | 2.87 | 0.01 | 0.6953 | 6.4% | 0.4% |
| | | | Default | 0.037 | 10.77 | | | 0.041 | 2.88 | | | | |
| | | 2.00 | Cyto | 0.127 | 10.49 | 0.36 | 0.0273 | 0.046 | 3.41 | -0.06 | 0.1055 | 3.3% | -1.6% |
| | | | Default | 0.010 | 10.85 | | | 0.027 | 3.35 | | | | |
| | | | | Average Difference | | 1.40 | | Average Difference | | 0.00 | | | |
| 6 | NHK | 0.12 | Cyto | 0.853 | 8.75 | 3.25 | 0.0068 | 0.00022 | 0.0005 | -0.0001 | 0.5313 | 27.1% | -27.3% |
| | | | Default | 0.000 | 12.00 | | | 0.00021 | 0.0004 | | | | |
| | | 0.25 | Cyto | 0.847 | 8.75 | 3.25 | 0.0105 | 0.033 | 0.11 | -0.0004 | 0.1099 | 27.1% | -3.8% |
| | | | Default | 0.002 | 11.99 | | | 0.033 | 0.10 | | | | |
| | | 0.50 | Cyto | 0.776 | 8.91 | 2.94 | 0.0081 | 0.099 | 0.72 | 0.02 | 0.0327 | 24.8% | 2.3% |
| | | | Default | 0.034 | 11.86 | | | 0.099 | 0.73 | | | | |
| | | 1.25 | Cyto | 0.481 | 9.44 | 1.78 | 0.0085 | 0.106 | 2.12 | 0.15 | 0.0085 | 15.9% | 6.4% |
| | | | Default | 0.058 | 11.23 | | | 0.086 | 2.27 | | | | |
| | | 2.00 | Cyto | 0.318 | 9.89 | 1.09 | 0.0266 | 0.090 | 2.82 | 0.11 | 0.0288 | 9.9% | 3.8% |
| | | | Default | 0.031 | 10.98 | | | 0.053 | 2.93 | | | | |
| | | | | Average Difference | | 2.46 | | Average Difference | | 0.05 | | | |
| | 3T3 | 0.12 | Cyto | 0.912 | 8.67 | 3.33 | 0.0098 | 0.00020 | 0.0005 | -0.00017 | 0.2500 | 27.7% | -50.0% |
| | | | Default | 0.000 | 12.00 | | | 0.00018 | 0.003 | | | | |
| | | 0.25 | Cyto | 0.912 | 8.68 | 3.31 | 0.0068 | 0.034 | 0.11 | 0.01 | 0.0210 | 27.6% | 4.4% |
| | | | Default | 0.002 | 11.99 | | | 0.035 | 0.12 | | | | |
| | | 0.50 | Cyto | 0.833 | 8.83 | 3.02 | 0.0068 | 0.106 | 0.74 | 0.00 | 0.8057 | 25.5% | -0.3% |
| | | | Default | 0.035 | 11.85 | | | 0.106 | 0.74 | | | | |
| | | 1.25 | Cyto | 0.542 | 9.41 | 1.81 | 0.0122 | 0.117 | 2.12 | 0.15 | 0.0269 | 16.1% | 6.6% |
| | | | Default | 0.060 | 11.22 | | | 0.096 | 2.27 | | | | |
| | | 2.00 | Cyto | 0.346 | 9.86 | 1.12 | 0.0161 | 0.095 | 2.83 | 0.12 | 0.0269 | 10.2% | 4.0% |
| | | | Default | 0.029 | 10.99 | | | 0.057 | 2.95 | | | | |
| | | | | Average Difference | | 2.52 | | Average Difference | | 0.05 | | | |

Abbreviations: ATC=Acute Toxic Class method (OECD 2001d); Toxcat=Category from Globally Harmonized System of Classification and Labeling of Chemicals[5] (GHS; UN 2005); NRU=Neutral red uptake; Sigma=Reciprocal of dose-mortality slope; Cyto=NRU-determined starting dose (i.e., one dose lower than the $LD_{50}$ predicted by the NRU $IC_{50}$ in the RC rat-only weight regression (log $LD_{50}$ [mg/kg] = 0.372 log $IC_{50}$ [µg/mL] + 2.024); Default=Default starting dose of 300 mg/kg; Std. Error=Standard error for number of animals; NHK=Normal human epidermal keratinocytes; 3T3= BALB/c 3T3 mouse fibroblasts; RC=Registry of Cytotoxicity.

[1]For 2000 ATC simulations at each starting dose and dose-mortality slope for 67 substances in the 3T3 NRU test method and 68 substances in the NHK NRU test method. Upper limit dose =2000 mg/kg.

[2]Mean number of animals for 2000 simulations.

[3]Difference between mean animals used for the default starting dose and mean animals used for the NRU-based starting dose.

[4]P-value is from one-side Wilcoxon signed rank test for difference in animals between the default and NRU-based starting doses. Significant values at $p < 0.05$.

| [5]GHS Toxicity Category | Oral $LD_{50}$ Limits |
|---|---|
| 1 | $LD_{50} \leq 5$ mg/kg |
| 2 | $5 < LD_{50} \leq 50$ mg/kg |
| 3 | $50 < LD_{50} \leq 300$ mg/kg |
| 4 | $300 < LD_{50} \leq 2000$ mg/kg |
| 5 | $2000 < LD_{50} \leq 5000$ mg/kg |
| 6 | $LD_{50} > 5000$ mg/kg |

## Concordance of NRU-Based Starting Dose with Default Starting Dose for GHS Acute Oral Toxicity Category Outcome for ATC Simulations[1]

| GHS Category Outcome with Default Starting Dose | GHS Category Outcome with NHK NRU-Based Starting Dose | | | | | | | | | |
|---|---|---|---|---|---|---|---|---|---|---|
| | 1 | 2 | 3 | 4 | 5 | 6 | Total | Category Match | Higher NRU Category | Lower NRU Category |
| **1** | 8 | 0 | 0 | 0 | 0 | 0 | 8 | 100% | 0% | 0% |
| **2** | 0 | 11 | 0 | 0 | 0 | 0 | 11 | 100% | 0% | 0% |
| **3** | 0 | 1 | 13 | 0 | 0 | 0 | 14 | 93% | 0% | 7% |
| **4** | 0 | 0 | 1 | 12 | 0 | 0 | 13 | 92% | 0% | 8% |
| **5** | 0 | 0 | 0 | 0 | 21 | 0 | 21 | 100% | 0% | 0% |
| **6** | 0 | 0 | 0 | 0 | 0 | 1 | 1 | 100% | 0% | 0% |
| **Total** | 8 | 12 | 14 | 12 | 21 | 1 | 68 | 97% | 0% | 3% |

| GHS Category Outcome with Default Starting Dose | GHS Category Outcome with 3T3 NRU-Based Starting Dose | | | | | | | | | |
|---|---|---|---|---|---|---|---|---|---|---|
| | 1 | 2 | 3 | 4 | 5 | 6 | Total | Category Match | Higher NRU Category | Lower NRU Category |
| **1** | 8 | 0 | 0 | 0 | 0 | 0 | 8 | 100% | 0% | 0% |
| **2** | 0 | 11 | 0 | 0 | 0 | 0 | 11 | 100% | 0% | 0% |
| **3** | 0 | 0 | 15 | 0 | 0 | 0 | 15 | 100% | 0% | 0% |
| **4** | 0 | 0 | 1 | 11 | 0 | 0 | 12 | 92% | 0% | 8% |
| **5** | 0 | 0 | 0 | 0 | 20 | 0 | 20 | 100% | 0% | 0% |
| **6** | 0 | 0 | 0 | 0 | 0 | 1 | 1 | 100% | 0% | 0% |
| **Total** | 8 | 11 | 16 | 11 | 20 | 1 | 67 | 99% | 0% | 1% |

Abbreviations: NRU=Neutral red uptake; GHS=Globally Harmonized System of Classification and Labelling of Chemicals (UN 2005); ATC=Acute Toxic Class method (OECD 2001d); NHK=Normal human epidermal keratinocytes; 3T3= BALB/c 3T3 mouse fibroblasts; RC=Registry of Cytotoxicity.

[1]For 2000 UDP simulations at each starting dose and dose-mortality slope for 67 substances in the 3T3 NRU test method and 68 substances in the NHK NRU test method. Upper limit dose =2000 mg/kg. The NRU-based starting dose was one dose lower than the $LD_{50}$ predicted by the NRU $IC_{50}$ in the RC rat-only weight regression (log $LD_{50}$ [mg/kg] = 0.372 log $IC_{50}$ [µg/mL] + 2.024).. The default starting dose = 300 mg/kg. Shaded cells are those containing the correct predictions.

| [2]GHS Toxicity Category | Oral $LD_{50}$ Limit |
|---|---|
| 1 | $LD_{50} \leq 5$ mg/kg |
| 2 | $5 < LD_{50} \leq 50$ mg/kg |
| 3 | $50 < LD_{50} \leq 300$ mg/kg |
| 4 | $300 < LD_{50} \leq 2000$ mg/kg |
| 5 | $2000 < LD_{50} \leq 5000$ mg/kg |
| 6 | $LD_{50} > 5000$ mg/kg |

## Discordant Substances[1] for GHS Category[2] Outcomes of ATC Simulations

| NRU Test Method | Substance | NRU-Based Starting Dose[3] Toxicity Category | Default Starting Dose[4] Toxicity Category |
|---|---|---|---|
| 3T3 | Cupric sulfate pentahydrate | 3 | 4 |
| NHK | Hexachlorophene | 2 | 3 |
| NHK | Propranolol | 3 | 4 |

Abbreviations: GHS=Globally Harmonized System of Classification and Labelling of Chemicals (UN 2005); ATC= Acute Toxic Class method (OECD 2001d); 3T3=BALB/c 3T3 mouse fibroblasts; NHK=Normal human epidermal keratinocytes; NRU=Neutral red uptake.

[1]Substances for which the simulated ATC outcome for the NRU-based starting dose did not match the simulated ATC outcome for the default starting dose. Simulations were performed with 2000 runs at each starting dose and dose-mortality slope for 67 substances in the 3T3 NRU test method and 68 substances in the NHK NRU test method. Upper limit dose =2000 mg/kg.

| [2]GHS Toxicity Category | Oral $LD_{50}$ Limits |
|---|---|
| 1 | $LD_{50} \leq 5$ mg/kg |
| 2 | $5 < LD_{50} \leq 50$ mg/kg |
| 3 | $50 < LD_{50} \leq 300$ mg/kg |
| 4 | $300 < LD_{50} \leq 2000$ mg/kg |
| 5 | $2000 < LD_{50} \leq 5000$ mg/kg |
| 6 | $LD_{50} > 5000$ mg/kg |

[3]NRU-based starting dose was one dose lower than the $LD_{50}$ predicted by the NRU $IC_{50}$ in the RC rat-only weight regression (log $LD_{50}$ [mg/kg] = 0.372 log $IC_{50}$ [μg/mL] + 2.024).

[4]The default starting dose = 300 mg/kg.

***[This Page Intentionally Left Blank]***

# Appendix O

## *Federal Register* Notices

**O1** ***70FR14473*** Request for Nominations for an Independent Peer Review Panel To Evaluate *In Vitro* Testing Methods for Estimating Acute Oral Systemic Toxicity and Request for *In Vivo* and *In Vitro* Data.....**O-3**

**O2** ***69FR61504*** Availability of Updated Standardized *In Vitro* Cytotoxicity Test Method Protocols for Estimating Acute Oral Systemic Toxicity; Request for Existing *In Vivo* and *In Vitro* Acute Toxicity Data .....**O-5**

**O3** ***69FR1148*** Notice of the Availability of Agency Responses to ICCVAM Test Recommendations for the Revised Up-and-Down Procedure for Determining Acute Oral Toxicity and *In Vitro* Methods for Assessing Acute Systemic Toxicity.....**O-7**

**O4** ***66FR49686*** Report of the International Workshop on *In Vitro* Methods for Assessing Acute Systemic Toxicity; Guidance Document on Using *In Vitro* Data to Estimate *In Vivo* Starting Doses for Acute Toxicity: Notice of Availability and Request for Public Comment .....**O-9**

**O5** ***65FR57203*** Notice of an International Workshop on *In Vitro* Methods for Assessing Acute Systemic Toxicity, co-sponsored by NIEHS, NTP and the U.S. Environmental Protection Agency (EPA): Workshop Agenda and Registration Information.....**O-11**

**O6** ***65FR37400*** Notice of an International Workshop on *In Vitro* Methods for Assessing Acute Systemic Toxicity, co-sponsored by NIEHS, NTP and the U.S. Environmental Protection Agency (EPA): Request for Data and Suggested Expert Scientists .....**O-15**

***[This Page Intentionally Left Blank]***

committee (NMQAAC). Concurrently, nomination materials for prospective candidates should be sent to FDA by April 21, 2005. A nominee may either be self-nominated or nominated by an organization to serve as a nonvoting industry representative.

**ADDRESSES:** All letters of interest and nominations should be sent to the contact person listed in the **FOR FURTHER INFORMATION** section of this notice.

**FOR FURTHER INFORMATION CONTACT:** Kathleen L. Walker, Center for Devices and Radiological Health (HFZ–17), Food and Drug Administration, 2098 Gaither Rd., Rockville, MD 20850, 240–276–0450, ext. 114.

**SUPPLEMENTARY INFORMATION:** The Mammography Quality Standards Reauthorization Act of 2004 (Public Law 108–365) requires the addition of at least two industry representatives with expertise in mammography equipment to the National Mammography Quality Assurance Advisory Committee.

### I. Functions of NMQAAC

The functions of the NMQAAC are to advise FDA on: (1) Developing appropriate quality standards and regulations for mammography facilities, (2) developing appropriate standards and regulations for bodies accrediting mammography facilities under this program, (3) developing regulations with respect to sanctions, (4) developing procedures for monitoring compliance with standards, (5) establishing a mechanism to investigate consumer complaints, (6) reporting new developments concerning breast imaging which should be considered in the oversight of mammography facilities, (7) determining whether there exists a shortage of mammography facilities in rural and health professional shortage areas and determining the effects of personnel on access to the services of such facilities in such areas, (8) determining whether there will exist a sufficient number of medical physicists after October 1, 1999, and (9) determining the costs and benefits of compliance with these requirements.

### II. Selection Procedure

Any organization representing the mammography device industry wishing to participate in the selection of a nonvoting member to represent industry should send a letter stating that interest to the FDA contact (see **FOR FURTHER INFORMATION CONTACT**) within 30 days of publication of this notice. Persons who nominate themselves as industry representatives will not participate in the selection process. It is, therefore, recommended that nominations be made by someone within an organization, trade association or firm who is willing to participate in the selection process. Within the subsequent 30 days, FDA will send a letter to each organization and a list of all nominees along with their resumes. The letter will state that the interested organizations are responsible for conferring with one another to select a candidate, within 60 days after receiving the letter, to serve as the nonvoting member representing the a particular committee. If no individual is selected within the 60 days, the Commissioner of Food and Drugs (the Commissioner) may select the nonvoting member to represent industry interests.

### III. Qualifications

Persons nominated for membership on the committee as an industry representative must meet the following criteria:(1) Demonstrate expertise in mammography equipment and (2) be able to discuss equipment specifications and quality control procedures affecting mammography equipment. The industry representative must be able to represent the industry perspective on issues and actions before the advisory committee; serve as liaison between the committee and interested industry parties; and facilitate dialogue with the advisory committee on mammography equipment issues.

### IV. Application Procedure

Individuals may nominate themselves, or an organization representing the mammography device industry may nominate one or more individuals to serve as nonvoting industry representatives. A current curriculum vitae (which includes the nominee's business address, telephone number, and e-mail address) and the name of the committee of interest should be sent to the FDA contact person. FDA will forward all nominations to the organizations that have expressed interest in participating in the selection process for the committee.

FDA has a special interest in ensuring that women, minority groups, individuals with disabilities, and small businesses are adequately represented on its advisory committees. Therefore, the agency encourages nominations for appropriately qualified candidates from these groups.

This notice is issued under the Federal Advisory Committee Act (5 U.S.C. app. 2) and 21 CFR part 14 relating to advisory committees.

Dated: March 14, 2005.

**Sheila Dearybury Walcoff,**

*Associate Commissioner for External Relations.*

[FR Doc. 05–5551 Filed 3–21–05; 8:45 am]

BILLING CODE 4160–01–S

---

## DEPARTMENT OF HEALTH AND HUMAN SERVICES

### National Institutes of Health

### National Toxicology Program; National Toxicology Program (NTP) Interagency Center for the Evaluation of Alternative Toxicological Methods (NICEATM); Request for Nominations for an Independent Peer Review Panel To Evaluate In Vitro Testing Methods for Estimating Acute Oral Systemic Toxicity and Request for In Vivo and In Vitro Data

**AGENCY:** National Institute of Environmental Health Sciences (NIEHS), National Institutes of Health (NIH), HHS.

**ACTION:** Request for nominations for an independent peer review panel and request for *in vivo* and *in vitro* data.

**SUMMARY:** The NTP Interagency Center for Evaluation of Alternative Toxicological Methods (NICEATM) in collaboration with the Interagency Coordinating Committee on the Validation of Alternative Methods (ICCVAM) is planning to convene an independent peer review panel (hereafter, Panel) to evaluate the validation status of two *in vitro* cytotoxicity assays for estimating *in vivo* acute oral toxicity. The Panel will evaluate the usefulness, limitations, accuracy, and reliability of these test methods for their intended purpose. NICEATM requests nominations of expert scientists for consideration as potential Panel members. ICCVAM will consider the conclusions and recommendations from the Panel in developing test method recommendations and performance standards for these test methods. Data from standard *in vivo* acute oral toxicity testing and *in vitro* cytotoxicity testing also is requested.

**DATES:** Nominations and data should be received by noon on May 6, 2005.

**ADDRESSES:** Nominations and data should be sent by mail, fax, or e-mail to Dr. William S. Stokes, Director of NICEATM, at NICEATM, NIEHS, P.O. Box 12233, MD EC–17, Research Triangle Park, NC 27709, (phone) 919–541–2384, (fax) 919–541–0947, (e-mail) *niceatm@niehs.nih.gov*. Courier address: NICEATM, 79 T.W. Alexander Drive,

Building 4401, Room 3128, Research Triangle Park, NC 27709.

**FOR FURTHER INFORMATION CONTACT:** NICEATM, NIEHS, P.O. Box 12233, MD EC–17, Research Triangle Park, NC 27709, (phone) 919–541–2384, (fax) 919–541–0947, (e-mail) *niceatm@niehs.nih.gov.*

**SUPPLEMENTARY INFORMATION:**

**Background**

NICEATM and the European Committee on the Validation of Alternative Methods (ECVAM) conducted a collaborative validation study to independently evaluate the usefulness of two *in vitro* basal cytotoxicity assays proposed for estimating *in vivo* rat acute oral toxicity. Neutral red uptake assays using both a mouse cell line (*i.e.*, BALB/c 3T3 fibroblasts) and a primary human cell type (*i.e.*, normal human epithelial keratinocytes) were evaluated in a multi-laboratory validation study. Cytotoxicity results are proposed for use in predicting starting doses for *in vivo* acute oral lethality assays, which may reduce the number of animals required for such determinations.

NICEATM is preparing Background Review Documents on the two *in vitro* test methods that will contain comprehensive summaries of available data, an analysis of the accuracy and reliability of standardized test method protocols, and related information characterizing the current validation status of these assays. Once completed, the Background Review Documents will be provided to the Panel and made available to the public. Meeting information, including date and location, and public availability of the Background Review Documents will be announced in a future **Federal Register** notice and posted on the ICCVAM/NICEATM Web site (*http://iccvam.niehs.nih.gov*).

**Request for the Nomination of Scientists for the Peer Review Panel**

NICEATM invites nominations of scientists with relevant knowledge and experience to serve on the Panel. Areas of relevant expertise include, but are not limited to: physiology and pharmacology, acute systemic toxicity testing in animals, evaluation and treatment of acute toxicity in humans, development and use of *in vitro* methodologies, biostatistical data analysis, knowledge of chemical data sets useful for validation of acute toxicity studies, and hazard classification of chemicals and products. Each nomination should include the person's name, affiliation, contact information (*i.e.* mailing address, e-mail address, telephone and fax numbers), and a brief summary of relevant experience and qualifications. Nominations should be sent to NICEATM by mail, fax, or e-mail within 45 days of the publication of this notice. Correspondence should be directed to Dr. William Stokes, Director, NICEATM, at the address given above.

**Request for Data**

NICEATM invites the submission of data from standard *in vivo* acute oral toxicity testing and *in vitro* cytotoxicity testing. Two previous requests for existing *in vivo* and *in vitro* acute toxicity data have been made (**Federal Register**, Vol. 69, No. 201, pp. 61504–5, October 19, 2004 and Vol. 65, No. 115, pp. 37400–3, June 14, 2000). *In vivo* and *in vitro* acute toxicity testing data for chemicals or products should be sent to NICEATM by mail, fax, or e-mail to the address given above. Data submitted by the deadline listed in this notice will be considered during an evaluation of the validation status of the two cytotoxicity methods, anticipated in late 2005; however, data will be accepted at any time. Chemical and protocol information/test data submitted in response to this notice may be incorporated in future NICEATM and ICCVAM reports and publications as appropriate.

When submitting chemical and protocol information/test data, please reference this **Federal Register** notice and provide appropriate contact information (name, affiliation, mailing address, phone, fax, e-mail, and sponsoring organization, as applicable).

NICEATM prefers data to be submitted as copies of pages from study notebooks and/or study reports, if available. Raw data and analyses available in electronic format may also be submitted. Each submission for a chemical should preferably include the following information, as appropriate:

- Common and trade name.
- Chemical Abstracts Service Registry Number (CASRN).
- Chemical class.
- Product class.
- Commercial source.
- *In vitro* basal cytotoxicity test protocol used.
- *In vitro* cytotoxicity test results.
- *In vivo* acute oral toxicity test protocol used.
- Individual animal responses at each observation time (if available).
- The extent to which the study complied with national or international Good Laboratory Practice (GLP) guidelines.
- Date and testing organization.

Those persons submitting data on chemicals tested for *in vitro* basal cytotoxicity are referred to the standard test-reporting template recommended for the High Production Volume (HPV) program at *http://www.epa.gov/chemrtk/toxprtow.htm* or at *http://iccvam.niehs.nih.gov/methods/invitro.htm*. *In vivo* data for the same chemicals should be reported as recommended in the test reporting section of the current Environmental Protection Agency (EPA) guideline for acute oral toxicity (EPA, 2002).

Submitted data will be used to further evaluate the usefulness and limitations of *in vitro* cytotoxicity data for estimating acute oral toxicity and will be included in a database to support the investigation of other test methods necessary to improve the accuracy of *in vitro* assessments of acute systemic toxicity.

**Background Information on ICCVAM and NICEATM**

ICCVAM is an interagency committee composed of representatives from 15 Federal regulatory and research agencies that use or generate toxicological information. ICCVAM conducts technical evaluations of new, revised, and alternative methods with regulatory applicability and promotes the scientific validation and regulatory acceptance of toxicological test methods that more accurately assess the safety and hazards of chemicals and products and that refine, reduce, and replace animal use. The ICCVAM Authorization Act of 2000 (Pub. L. 106–545, available at *http://iccvam.niehs.nih.gov/about/PL106545.htm*) establishes ICCVAM as a permanent interagency committee of the NIEHS under the NICEATM. NICEATM administers the ICCVAM and provides scientific and operational support for ICCVAM-related activities. NICEATM and ICCVAM work collaboratively to evaluate new and improved test methods applicable to the needs of Federal agencies. Additional information about ICCVAM and NICEATM can be found at the following Web site: *http://iccvam.niehs.nih.gov.*

Dated: March 11, 2005.

**Samuel H. Wilson,**

*Deputy Director, National Institute of Environmental Health Sciences.*

[FR Doc. 05–5564 Filed 3–21–05; 8:45 am]

BILLING CODE 4140–01–P

and Eukaryotic Genetics and Molecular Biology.

*Date:* November 3–5, 2004.

*Time:* 7 a.m. to 5 p.m.

*Agenda:* To review and evaluate grant applications.

*Place:* Hyatt Regency Bethesda, One Bethesda Metro Center, 7400 Wisconsin Avenue, Bethesda, MD 20814.

*Contact Person:* Mary P. McCormick, PhD, Scientific Review Administrator, Center for Scientific Review, National Institutes of Health, 6701 Rockledge Drive, Room 2208, MSC 7890, Bethesda, MD 20892, (301) 435–1047, *mccormim@csr.nih.gov.*

*Name of Committee:* Center for Scientific Review Special Emphasis Panel, Fetal Basis for Adult Disease.

*Date:* November 3–4, 2004.

*Time:* 7 a.m. to 5 p.m.

*Agenda:* To review and evaluate grant applications.

*Place:* Bethesda Marriott Suites, 6711 Democracy Boulevard, Bethesda, MD 20817.

*Contact Person:* Ray Bramhall, PhD, Scientific Review Administrator, Center for Scientific Review, National Institutes of Health, 6701 Rockledge Drive, Room 6046 F, MSC 7892, Bethesda, MD 20892, (910) 458–1871, *bramhalr@csr.nih.gov.*

(Catalogue of Federal Domestic Assistance Program Nos. 93.306, Comparative Medicine; 93.333, Clinical Research, 93.306, 93.333, 93.337, 93.393–93.396, 93.837–93.844, 93.846–93.878, 93.892, 93.893, National Institutes of Health, HHS.)

Dated: October 7, 2004.

**LaVerne Y. Stringfield,**

*Director, Office of Federal Advisory Committee Policy.*

[FR Doc. 04–23350 Filed 10–18–04; 8:45 am]

BILLING CODE 4140–01–M

---

## DEPARTMENT OF HEALTH AND HUMAN SERVICES

### Public Health Service

### National Institute of Environmental Health Sciences (NIEHS); National Toxicology Program (NTP); NTP Interagency Center for the Evaluation of Alternative Toxicological Methods (NICEATM): Availability of Updated Standardized *In Vitro* Cytotoxicity Test Method Protocols for Estimating Acute Oral Systemic Toxicity; Request for Existing *In Vivo* and *In Vitro* Acute Toxicity Data

*Summary:* NICEATM announces the availability of two updated standardized in vitro cytotoxicity test method protocols to estimate acute oral systemic toxicity in rodents. These two test methods were previously recommended by the Interagency Coordinating Committee on the Validation of Alternative Methods (ICCVAM) for selecting starting doses for in vivo acute oral systemic toxicity tests (**Federal Register** Vol. 66, No. 189, pages 49686–49687, September 28, 2001). This approach can reduce the number of animals required for acute oral toxicity testing. NICEATM also requests the submission of existing and future data on chemicals and products tested for both acute oral systemic toxicity and in vitro cytotoxicity using the standardized test method protocols mentioned in this notice. These data will be used to further evaluate the usefulness and limitations of cytotoxicity methods for estimating in vivo acute oral toxicity. The data will also be used to establish a database to support the investigation of other test methods necessary to improve the accuracy of in vitro assessments of acute systemic toxicity.

#### Availability of Standardized Test Method Protocols for Estimating Starting Doses for *In Vivo* Acute Oral Toxicity Tests

Updated standardized protocols for two neutral red uptake assays using either BALB/c 3T3 cells or normal human keratinocytes are now available at: *http://iccvam.niehs.nih.gov/methods/invitro.htm.* These test method protocols have been improved to maximize intra- and inter-laboratory reproducibility and are currently being used for the final phase of a joint NICEATM-European Center for the Validation of Alternative Methods (ECVAM) validation study. NICEATM recommends that these updated test method protocols be used in place of standard operating procedures previously recommended by ICCVAM for two cytotoxicity test methods to estimate starting doses for in vivo acute oral toxicity tests (ICCVAM, 2001b).

#### Submission of Chemical and Protocol Information/Test Data

In vivo and in vitro acute toxicity testing data for chemicals or products should be sent by mail, fax or e-mail to NICEATM [Dr. William S. Stokes, Director, NICEATM, NIEHS, PO Box 12233, MD EC–17, Research Triangle Park, NC 27709, (phone) 919–541–2384, (fax) 919–541–0947, (e-mail) *iccvam@niehs.nih.gov*]. Data will be accepted at any time. Data submitted within the next 9 months will be considered during an evaluation of the validation status of the two cytotoxicity methods anticipated in late 2005. Chemical and protocol information/test data submitted in response to this notice may be incorporated in future NICEATM and ICCVAM reports and publications as appropriate.

When submitting chemical and protocol information/test data, please reference this **Federal Register** notice and provide appropriate contact information (name, affiliation, mailing address, phone, fax, e-mail, and sponsoring organization, as applicable).

NICEATM prefers data to be submitted as copies of pages from study notebooks and/or study reports, if available. Raw data and analyses available in electronic format may also be submitted. Each submission for a chemical should preferably include the following information, as appropriate:

- Common and trade name
- Chemical Abstracts Service Registry Number (CASRN)
- Chemical and/or product class
- Commercial source
- In vitro basal cytotoxicity test protocol used
- In vitro cytotoxicity test results
- In vivo acute oral toxicity test protocol used
- Individual animal responses at each observation time (if available)
- The extent to which the study complied with national or international Good Laboratory Practice (GLP) guidelines
- Date and testing organization

Those persons submitting data on chemicals tested for in vitro basal cytotoxicity are referred to the standard test-reporting template recommended for the High Production Volume (HPV) program at *http://www.epa.gov/chemrtk/toxprtow.htm* or at *http://iccvam.niehs.nih.gov/methods/invitro.htm.* In vivo data for the same chemicals should be reported as recommended in the test reporting section of the current Environmental Protection Agency (EPA) guideline for acute oral toxicity (EPA, 2002).

Submitted data will be used to further evaluate the usefulness and limitations of in vitro cytotoxicity data for estimating acute oral toxicity, and will be included in a database to support the investigation of other test methods necessary to improve the accuracy of in vitro assessments of acute systemic toxicity.

#### History

In September 2001, the ICCVAM recommended that in vitro cytotoxicity test methods be considered as a tool for estimating starting doses for in vivo acute systemic toxicity testing studies (**Federal Register** Vol. 66, No. 189, pages 49686–49687, September 28, 2001.) The recommendations were based on the Report of the International Workshop on In Vitro Methods for Assessing Acute Systemic Toxicity (ICCVAM, 2001a). The Guidance Document on Using In Vitro Data to Estimate In Vivo Starting Doses for Acute Toxicity (ICCVAM, 2001b) was

also made available at that time. The guidance document provided standard operating procedures for two cytotoxicity test methods and instructions for using these assays to estimate starting doses for in vivo testing.

Federal agency responses to the ICCVAM test method recommendations were announced on March 10, 2004 (**Federal Register** Vol. 69, No. 47, pages 11448–11449). Federal agencies agreed to encourage, to the extent applicable, the use of in vitro tests for determining starting doses for acute systemic toxicity testing. Furthermore, EPA specifically encouraged those participating in the HPV Challenge Program to consider using the recommended in vitro tests as a supplemental component in conducting any new in vivo acute oral toxicity studies for the program (*http://www.epa.gov/chemrtk/toxprtow.htm*).

A NICEATM–ECVAM validation study was initiated in 2002 to evaluate the usefulness of the two neutral red uptake cytotoxicity assays currently available for predicting starting doses for in vivo acute oral toxicity tests. During the pre-validation phases of the study, the test method protocols were further standardized and revised to improve their intra- and inter-laboratory reproducibility. NICEATM recommends using the revised test method protocols rather than the standard operating procedures outlined in the guidance document (ICCVAM, 2001b.) The guidance document should be consulted for the procedure for calculating starting doses using in vitro cytotoxicity data.

### Background Information on ICCVAM and NICEATM

ICCVAM is an interagency committee composed of representatives from fifteen Federal regulatory and research agencies that use, generate, or disseminate toxicological information. ICCVAM promotes the development, validation, regulatory acceptance, and national and international harmonization of toxicological test methods that more accurately assess the safety or hazards of chemicals and products, and test methods that refine, reduce and replace animal use. The ICCVAM Authorization Act of 2000 (available at *http://iccvam.niehs.nih.gov/about/PL106545.htm*) established ICCVAM as a permanent interagency committee of the NIEHS under the NICEATM. NICEATM administers the ICCVAM and provides scientific support for ICCVAM and ICCVAM-related activities. NICEATM and ICCVAM work collaboratively to evaluate new and improved test methods applicable to the needs of Federal agencies. Additional information about ICCVAM and NICEATM can be found at the following Web site: *http://iccvam.niehs.nih.gov/*.

### References

EPA. 2002. Health Effects Test Guidelines, OPPTS 870.1100, Acute Oral Toxicity, EPA 712–C–02–190. Available at: *http://www.epa.gov/opptsfrs/OPPTS_Harmonized/870_Health_Effects_Test_Guidelines/Series/870-1100.pdf*.

ICCVAM (Interagency Coordinating Committee on the Validation of Alternative Methods). 2001a. Report of the international workshop on in vitro methods for assessing acute systemic toxicity. NIH Publication 01–4499. Research Triangle Park, NC: National Institute for Environmental Health Sciences. Available at: *http://iccvam.niehs.nih.gov/*.

ICCVAM. 2001b. Guidance document on using in vitro data to estimate in vivo starting doses for acute toxicity. NIH Publication 01–4500. Research Triangle Park, NC: National Institute for Environmental Health Sciences. Available at: *http://iccvam.niehs.nih.gov/*.

Dated: October 6, 2004.

**Samuel H. Wilson,**

*Deputy Director, National Institute of Environmental Health Sciences.*

[FR Doc. 04–23335 Filed 10–18–04; 8:45 am]

BILLING CODE 4140–01–P

---

## DEPARTMENT OF HOMELAND SECURITY

### Coast Guard

**[CGD17–04–002]**

### Cook Inlet Regional Citizen's Advisory Committee; Charter Renewal

**AGENCY:** Coast Guard, DHS.

**ACTION:** Notice of recertification.

**SUMMARY:** The Coast Guard has recertified the Cook Inlet Regional Citizen's Advisory Council for the period covering September 1, 2004 through August 31, 2005. Under the Oil Terminal and Oil Tanker Environmental Oversight Act of 1990, the Coast Guard may certify on an annual basis an alternative voluntary advisory group in lieu of a regional citizens' advisory council for Cook Inlet, Alaska. This advisory group monitors the activities of terminal facilities and crude oil tankers under the Cook Inlet Program established by the statute.

**DATES:** The Cook Inlet Regional Citizen's Advisory Council is certified through August 31, 2005.

**ADDRESSES:** You may request a copy of the recertification letter by writing to Commander, Seventeenth Coast Guard District (mor), P.O. Box 25517, Juneau, AK 99802–5517.

**FOR FURTHER INFORMATION CONTACT:** Lieutenant Andrew Vanskike, Seventeenth Coast Guard District (mor), 907–463–2818.

**SUPPLEMENTARY INFORMATION:**

### Background And Purpose

On September 1, 2004, the Coast Guard recertified the Cook Inlet Regional Citizen's Advisory Council (CIRCAC) through August 31, 2005. Under the Oil Terminal and Oil Tanker Environmental Oversight Act of 1990 (33 U.S.C. 2732), the Coast Guard may certify, on an annual basis, an alternative voluntary advisory group in lieu of a regional citizens' advisory council for Cook Inlet, Alaska. This advisory group monitors the activities of terminal facilities and crude oil tankers under the Cook Inlet Program established by Congress, 33 U.S.C. 2732 (b).

On September 16, 2002, the Coast Guard published a notice of policy on revised recertification procedures for alternative voluntary advisory groups in lieu of councils at Prince William Sound and Cook Inlet, AK (67 FR 58440, 58441). This revised policy indicated that applicants seeking recertification in 2003 and 2004 need only submit a streamlined application and public comments would not be solicited prior to recertification.

Dated: September 24, 2004.

**James C. Olson,**

*Rear Admiral, U.S. Coast Guard, Commander, Seventeenth Coast Guard District.*

[FR Doc. 04–23370 Filed 10–18–04; 8:45 am]

BILLING CODE 4910–15–M

---

## DEPARTMENT OF HOMELAND SECURITY

### Federal Emergency Management Agency

### Notice of Adjustment of Countywide Per Capita Impact Indicator

**AGENCY:** Federal Emergency Management Agency, Emergency Preparedness and Response Directorate, Department of Homeland Security.

**ACTION:** Notice.

**SUMMARY:** FEMA gives notice that the countywide per capita impact indicator under the Public Assistance program for disasters declared on or after October 1, 2004 will be increased.

**DATES:** Effective October 1, 2004 and applies to major disasters declared on or after October 1, 2004.

**FOR FURTHER INFORMATION CONTACT:** James A. Walke, Recovery Division, Federal Emergency Management

Natives (AI/AN) tribal governments to all available programs in the Department of Health and Human Services (HHS), and coordinate the tribal consultation activities associated with formulation of the IHS annual budget request. The application is for a five year project which will commence with an initial award on March 15, 2004. The initial budget period will be awarded at $227,00.00 and the entire project is expected to be awarded at $1,135,000.00.

The award is issued under the authority of the Public Health Service Act, section 301(a) and is included under the Catalog of Federal Domestic Assistance number 93.933. The specific objectives of the project are to:

1. Provide ongoing technical advice and consultation as the national Indian organization that is representative of all tribal governments in the area of health care policy analysis and program development.
2. Assure that health care advocacy is based on tribal input through a broad-based consumer network involving the Area Indian Health Boards or Health Board Representatives from each of the 12 IHS Areas.
3. Establish relationships with other national Indian organizations, with professional groups and with Federal, State and local entities to serve as advocates for AI/AN health programs. As a recipient of a grant/cooperative agreement, the NIHB is prohibited from conducting lobbying activities using Federal funding.
4. Improve and expand access for AI/AN tribal governments to all available programs in the HHS.
5. Publish, at least three times a year, a newsletter featuring articles on health promotion/disease prevention activities and models of best or improving practices, health policy and funding information relevant to AI/AN, *etc.*
6. Disseminate timely health care information to tribal governments, AI/AN Health Boards, other national Indian organizations, professional groups, Federal, State, and local entities.
7. Coordinate the tribal consultation activities associated with formulation of the IHS annual budget request.

*Justification for Single Source:* This project has been awarded on a non-competitive single source basis. NIHB is the only national AI/AN organization with health expertise that represents the interest of all federally recognized tribes.

*Use of Cooperative Agreement:* A non-competitive single source Cooperative Agreement Award will involve:

1. IHS staff will review articles concerning the Agency for accuracy and may, as requested by the NIHB, provide articles.
2. IHS staff will have aproval over the hiring of key personnel as defined by regulation or provision in the cooperative agreement.
3. IHS will provide technical assistance to the NIHB as requested and attend and participate in all NIHB Board meetings.

**FOR FURTHER INFORAMTION CONTACT:** Douglas Black, Director, Office of Tribal Programs, Office of the Director, Indian Health Service, 801 Thompson Avenue, Reyes Building, Suite 220, Rockville, Maryland 20852, telephone (301) 443–1104. For grants information, contact Sylvia Tyan, Grants Management Specialist, Division of Acquisition and Grants Management Branch, 1200 Twinbrook Parkway, Room 450A, Rockville, Maryland 20852, telephone (301) 443–5204.

Dated: March 1, 2004.

**Charles W. Grim,**

*Assistant Surgeon General, Director, Indian Health Service.*

[FR Doc. 04–5305 Filed 3–9–04; 8:45 am]

BILLING CODE 4160–16–M

---

## DEPARTMENT OF HEALTH AND HUMAN SERVICES

### National Institutes of Health

### Office of the Director; Notice of Meeting

The Office of the Director, National Institutes of Health (NIH), announces a meeting of the NIH Blue Ribbon Panel on Conflict of Interest Policies, a working group of the Advisory Committee to the director, NIH. The meeting is scheduled for March 12–13, 2004. The meeting will be held at the NIH, 9000 Rockville Pike, Bethesda, Maryland, Building 31C, Conference Room 6. Attendance will be limited to space available. In the interest of security, NIH has instituted stringent procedures for entrance into the building by non-government employees. Persons without a government I.D. will need to shop a photo I.D. and sign in at the security desk upon entering the building.

On March 12, the Panel will meet in closed, Executive Session, from 8:30–10 a.m., and in public session, from 10 a.m.–6:15 p.m. On March 13, the Panel will meet in closed, Executive Session, from 8:30 a.m.–2 p.m. The agenda will be posted on the NIH Web site *(http://www.nih.gov)* prior to the meeting.

During the public session, time will be set aside for oral presentations by the public. Any person wishing to take a presentation should notify Charlene French, Office of Science Policy, National Institutes of Health, Building 1, Room 103, Bethesda, Maryland 20892, telephone (301) 496–2122 by March 11, 2004 or by e-mail: *blueribbonpanel@mail.nih.gov.*

Oral comments will be limited to 5 minutes. Due to time constraints, only one representative from each organization will be allotted time for oral testimony. The number of speakers and the time allotment may also be limited by the number of presentations. The opportunity to speak will be based on a first come first served basis. All requests to present oral comments should include the name, addresses, telephone number, and business or professional affiliation of the interested party, and should indicate the areas of interest or issue to be addressed. Please provide, if possible, an electronic copy of your comments.

Any person attending the meeting who has not registered to speak in advance of the meeting will be allowed to make a brief oral statement during the time set aside for public comment, if time permits and at the discretion of the co-chairs.

Individuals who plan to attend the meeting and need special assistance, such as sign language interpretation or other reasonable accommodations, should notify Charlene French at the address listed earlier in this notice in advance of the meeting.

Dated: March 5, 2004.

**LaVerne Stringfield,**

*Director, Office of Federal Advisory Committee Policy.*

[FR Doc. 04–5504 Filed 3–8–04; 8:45 am]

BILLING CODE 4140–01–M

---

## DEPARTMENT OF HEALTH AND HUMAN SERVICES

### Public Health Service

### National Institute of Environmental Health Sciences (NIEHS); National Toxicology Program (NTP); Notice of the Availability of Agency Responses to ICCVAM Test Recommendations for the Revised Up-and-Down Procedure for Determining Acute Oral Toxicity and In Vitro Methods for Assessing Acute Systemic Toxicity

#### Summary

The National Toxicology Program Interagency Center for the Evaluation of Alternative Toxicological Methods (NICEATM) announces the availability of Federal agency responses to Interagency Coordinating Committee on the Validation of Alternative Methods

(ICCVAM) test recommendations for: (1) The revised Up-and-Down Procedure (UDP) for determining acute oral toxicity and (2) *in vitro* methods for assessing acute systemic toxicity. Pursuant to sections 3 of the ICCVAM Authorization Act of 2000 [Pub. L. 106–545 (42 U.S.C. 285l–4)], ICCVAM is required to make final ICCVAM test recommendations and the responses from agencies regarding such recommendations available to the public.

**Availability of Agency Responses**

The agency responses to the ICCVAM test recommendations and other current information relevant to these test recommendations are available electronically (PDF and HTML formats) on the NICEATM/ICCVAM Web site at *http://iccvam.niehs.nih.gov*. Hard copy versions of these responses can be requested by contacting NICEATM at P.O. Box 12233, MD EC–17, Research Triangle Park, NC 27709 (mail), 919–541–2384 (telephone), 919–541–0947 (fax), or *niceatm@niehs.nih.gov*.

In summary, the Federal agencies agreed that the UDP had been adequately validated as a replacement for the conventional LD50 test and indicated to the extent applicable, that they will encourage the use of *in vitro* tests for determining starting doses for acute systemic toxicity testing.

**ICCVAM Recommmendations**

NICEATM announced availability of the ICCVAM recommendations for the UDP on February 7, 2002 (**Federal Register** Vol. 67, No. 26, pages 5842–5844). ICCVAM recommends based upon the report, *The Revised Up-and-Down Procedure: A Test Method for Determining the Acute Oral Toxicity of Chemicals; Results of an Independent Peer Review Evaluation Organized by the ICCVAM and NICEATM*, NIH Publication No. 02–4501, that the UDP be used instead of the conventional LD50 test to determine the acute oral toxicity hazard of chemicals for hazard classification and labeling purposes.

NICEATM announced availability of the ICCVAM recommendations for the *in vitro* methods for assessing acute systemic toxicity on September 28, 2001 (**Federal Register** Vol. 66, No. 189, pages 49686–49687). ICCVAM recommends based upon the reports, *Report of the International Workshop on In Vitro Methods for Assessing Acute Systemic Toxicity*, NIH Publication No. 01–4499, and the *Guidance Document on Using In Vitro Data to Estimate In Vivo Starting Doses for Acute Toxicity*, NIH Publication No. 01–4500, that the *in vitro* methods be considered as a tool for estimating starting doses for animal tests of acute systemic toxicity.

**Background Information on ICCVAM and NICEATM**

The NIEHS established the ICCVAM in 1997 to coordinate the interagency technical review of new, revised, and alternative test methods of interagency interest, and to coordinate cross-agency issues relating to the validation, acceptance, and national/international harmonization of toxicological testing methods. ICCVAM was established as a permanent interagency committee of the NIEHS under the NICEATM on December 19, 2000, by the ICCVAM Authorization Act of 2000 (Pub. L. 106–545, available at *http://iccvam.niehs.nih.gov/about/PL106545.pdf*). The Committee is composed of representatives from fifteen Federal regulatory and research agencies that use or generate toxicological information. ICCVAM promotes the scientific validation and regulatory acceptance of toxicological test methods that will improve agencies' ability to accurately assess the safety or hazards of chemicals and various types of products, while refining (less pain and distress), reducing, and replacing animal use wherever possible. NICEATM administers the ICCVAM and provides scientific and operational support for ICCVAM and ICCVAM-related activities. NICEATM and ICCVAM work collaboratively to evaluate new and improved test methods applicable to the needs of Federal agencies. Additional information about ICCVAM and NICEATM can be found at the following Web site: *http://iccvam.niehs.nih.gov*.

Dated: March 2, 2004.

**Samuel H. Wilson,**

*Deputy Director, National Institute of Environmental Health Sciences.*

[FR Doc. 04–5321 Filed 3–9–04; 8:45 am]

BILLING CODE 4140–01–P

---

## DEPARTMENT OF HOMELAND SECURITY

### Coast Guard

**[USCG–2000–7848]**

### Inland Tank Barge Certificates of Inspection; Administrative Changes

**AGENCY:** Coast Guard, DHS.

**ACTION:** Notice of results.

**SUMMARY:** The Coast Guard commissioned a one-year tank barge Certificate of Inspection (COI) pilot program to test administrative changes to inland tank barge COIs. Under the old Marine Safety Information System, a regulatory change would have been required had any changes been made to the COIs. Use of the new Marine Information for Safety and Law Enforcement information system allows easy access to the COIs; therefore no change in the regulations is needed.

**DATES:** No further actions are planned.

**FOR FURTHER INFORMATION CONTACT:** For questions on this Notice, contact Commander Robert Hennessy, U.S. Coast Guard Headquarters, 2100 Second Street, SW., Washington, DC 20593–0001, telephone: 202–267–0103, facsimile: 202–267–4570, e-mail: *RHennessy@comdt.uscg.mil* or Lieutenant Raymond Lechner, U.S. Coast Guard Marine Safety Center, 400 7th Street, SW., Washington, DC 20590, telephone: 202–366–6462, e-mail: *RLechner@msc.uscg.mil*.

**SUPPLEMENTARY INFORMATION:** A pilot program was initiated to evaluate a Chemical Transportation Advisory Committee (CTAC) recommendation. The pilot program assessed the benefits of shifting the vessel cargo authority and conditions of carriage information from one required document (the vessel's Certificate of Inspection (COI)) to another required document (the vessel's cargo transfer procedures). Background information about the pilot program conducted by the Marine Safety Office, New Orleans, LA, in cooperation with the Marine Safety Center, American Commercial Barge Lines, and the Petroleum Services Corporation, can be found in the August 31, 2000, **Federal Register** Notice (65 FR 53071).

Since the pilot program was initiated, the Coast Guard now has the Marine Information for Safety and Law Enforcement (MISLE) information system in use. MISLE allows for a different presentation of cargo information than the old Marine Safety Information System. A Certificate of Inspection for inland tank barges and a newly developed Cargo Authority Attachment are now easily accessible from the MISLE; therefore, no changes in the regulations are required. Additional information can be found on the Marine Safety Center's Web site: *http://www.uscg.mil/hq/msc/T2.misle.htm* under "T2: Tank Vessel Cargo and Vapor Control Authority Under MISLE."

Dated: February 27, 2004.

**Joseph J. Angelo,**

*Director of Standards, Marine Safety, Security and Environmental Protection.*

[FR Doc. 04–5300 Filed 3–9–04; 8:45 am]

BILLING CODE 4910–15–P

valid for use as replacements for the animal test and were ready to be considered for regulatory acceptance (Balls and Corcelle, 1998; Balls and Hellsten, 2000). The European Scientific Committee for Cosmetic Products and Non-food Products (SCCNFP) evaluated the EPISKIN™ and Rat Skin TER and concluded that they were applicable for the safety evaluation of cosmetic ingredients or mixtures of ingredients (Anon., 1999). The European Commission subsequently adopted EpiDerm™, EPISKIN™, and Rat Skin TER (Anon., 2000).

*Proposed ICCVAM Recommendations*

ICCVAM proposes that these assays can be used to assess the dermal corrosion potential of chemicals in a weight-of-evidence approach in an integrated testing scheme [e.g., OECD Globally Harmonised Classification System (OECD, 1998); OECD Revised Proposals for Updated Test Guidelines 404 and 405: Dermal and Eye Corrosion/ Irritation Studies (OECD, 2001a)]. These integrated testing schemes for dermal irritation/corrosion allow for the use of validated and accepted in vitro methods. In this approach, positive in vitro corrosivity responses do not generally require further testing and can be used for classification and labeling. Negative in vitro corrosivity responses shall be followed by in vivo dermal corrosion/irritation testing. (Note: The first animal used in the irritation/ corrosivity assessment would be expected to identify any chemical corrosives that were false negatives in the in vitro test). Furthermore, as is appropriate for any in vitro assay, there is the opportunity for confirmatory testing if false positive results are indicated on a weight of evidence evaluation of supplemental information, such as pH, structure activity relationships (SAR), and other chemical and testing information.

**Additional Information About ICCVAM and NICEATM**

ICCVAM, with 15 participating Federal agencies, was established in 1997 to coordinate interagency issues on toxicological test method development, validation, regulatory acceptance, and national and international harmonization. The ICCVAM Authorization Act of 2000 (Public Law 106–545) formally authorized and designated ICCVAM as a permanent committee administered by the NIEHS with specific duties that include the technical evaluation of new and alternative testing methods. ICCVAM is charged with developing test recommendations based on those technical evaluations, and forwarding these to Federal agencies for their consideration. The NICEATM was established in 1998 to coordinate and facilitate ICCVAM activities, to provide peer review for validation activities and to promote communication with stakeholders. The NICEATM is located at the NIEHS, Research Triangle Park, NC. Additional information concerning ICCVAM and NICEATM can be found on the ICCVAM/NICEATM web site at *http://iccvam.niehs.nih.gov.*

**References**

Anon. EU Commission Directive 2000/33/ EC of 25 April 2000 (Official Journal of the European Communities), Skin Corrosion, Rat Skin TER and Human Skin Model Assay. OJ L 136, June 8, 2000. Available: *http://embryo.ib.amwaw.edu.pl/invittox/prot/1_13620000608en00010089.pdf* [cited July 19, 2001].

Anon. Scientific Committee for Cosmetic Products, and Non-food Products intended for Consumers. Excerpts of the Outcome of Discussions Record of the 6th Plenary Meeting (SCCNFP) Brussels, Belgium. January 20, 1999. Available: *http://europa.eu.int/comm/food/fs/sc/sccp/out50_en.html* [cited July 19, 2001].

Balls M, Corcelle G. "Statement on the scientific validity of the Rat Skin Transcutaneous Electrical Resistance (TER) Test (an in vitro test for skin corrosivity) and Statement of the scientific validity of the EPISKIN™ test (an in vitro test for skin corrosivity)," dated April 3, 1998. Statement from the European Commission Joint Research Centre, Environment Institute, Ispra (VA), Italy presenting the results of the 10th ECVAM Scientific Advisory Committee (ESAC) meeting on March 31 (1998). Available: *http://www.iivs.org/news/ratskin-episkin.html* [cited July 19, 2001].

Balls M, Hellsten E. "Statement on the application of the EpiDerm™ human skin model for corrosivity testing," dated March 20, 2000. ECVAM Scientific Advisory Committee meeting, Ispra, Italy, March 14–15 (2000).

Barratt, MD, Brantom PG, Fentem JH, Gerner I, Walker AP, Worth AP. The ECVAM international validation study on in vitro tests for skin corrosivity. 1. Selection and distribution of the test chemicals. Toxicology In Vitro 12:471–482 (1998).

Fentem, JH, Archer GEB, Balls M, Botham PA, Curren RD, Earl LK, Esdaile DJ, Holzhutter H–G, Liebsch M. The ECVAM international validation study on in vitro tests for skin corrosivity. 2. Results and evaluation by the management team. Toxicology In Vitro 12:483–524 (1998).

Interagency Center for the Evaluation of Alternative Methods (ICCVAM). Procedures for test methods that have been endorsed by ECVAM (April 20, 2001). *http://iccvam.niehs.nih.gov.*

Liebsch M, Traue D, Barrabas C, Spielmann H, Uphill P, Wilkins S, McPherson JP, Wiemann C, Kaufmann T, Remmele M, Holzhutter HG. The ECVAM prevalidation study on the use of EpiDerm for skin corrosivity testing. ATLA-Alternatives to Laboratory Animals 28:371–401 (2000).

Organization for Economic Co-operation and Development (OECD). Harmonized Integrated Hazard Classification System for Human Health and Environmental Effects of Chemical Substances, as endorsed by the 28th Joint Meeting of the Chemicals Committee and the Working Party on Chemicals, OECD, Paris, France. (November 1998) *http://www.oecd.org/ehs/Class/HCL6.htm*

OECD. OECD Revised Proposals for Updated Test Guidelines 404 and 405: Dermal and Eye Corrosion/Irritation Studies. [OECD ENV/JM/TG (2001)2]. OECD Environment Directorate, Joint Meeting of the Chemicals Committee and the Working Party on Chemicals, Pesticides and Biotechnology. Test Guidelines Programme. Circulated in preparation for the 13th Meeting of the Working Group of the National Coordinators of the Test Guidelines Programme, OECD, Paris, France. (2001a)

Dated: September 21, 2001.

**Samuel H. Wilson,**

*Deputy Director, National Institute of Environmental Health Sciences.*

[FR Doc. 01–24371 Filed 9–27–01; 8:45 am]

BILLING CODE 4140–01–P

---

## DEPARTMENT OF HEALTH AND HUMAN SERVICES

### Public Health Service

### National Institute of Environmental Health Sciences (NIEHS); National Toxicology Program (NTP)

Report of the International Workshop on In Vitro Methods for Assessing Acute Systemic Toxicity; Guidance Document on Using In Vitro Data to Estimate In Vivo Starting Doses for Acute Toxicity: Notice of Availability and Request for Public Comment.

**Summary**

Notice is hereby given of the availability of the reports entitled, "Report of the International Workshop on In Vitro Methods for Assessing Acute Systemic Toxicity" NIH Publication 01–4499 and "Guidance Document on Using In Vitro Data to Estimate In Vivo Starting Doses for Acute Toxicity" NIH Publication 01–4500. The Report provides conclusions and recommendations from expert scientists based on their review of current in vitro methods for assessing acute toxicity at an October 17–20, 2000 workshop. The workshop was organized by the National Toxicology Program Interagency Center for the Evaluation of Alternative Toxicological Methods (NICEATM) and the Interagency Coordinating Committee on the Validation of Alternative Methods (ICCVAM). The Guidance Document

**Federal Register** / Vol. 66, No. 189 / Friday, September 28, 2001 / Notices **49687**

provides Standard Operating Procedures (SOPs) for performing two in vitro basal cytotoxicity assays and describes how to use this in vitro data to predict starting doses for in vivo acute oral toxicity studies.

**Availability of the Documents**

To receive a copy of either report, please contact NICEATM at P.O. Box 12233, MD EC–17, Research Triangle Park, NC 27709 (mail), 919–541–3398 (phone), 919–541–0947 (fax), or *niceatm@niehs.nih.gov* (email). The reports are also available on the ICCVAM/NICEATM website at *http://iccvam.niehs.nih.gov.*

**Request for Public Comments**

NICEATM invites written public comments on the Workshop Report and the Guidance Document. Comments should be sent to NICEATM by November 13, 2001. Comments submitted via e-mail are preferred; the acceptable file formats are MS Word (Office 98 or older), plain text, or PDF. Comments should be sent to Dr. William S. Stokes, Director, NICEATM, NIEHS, MD EC–17, PO Box 12233, Research Triangle Park, NC, 27709; telephone 919–541–2384; fax 919–541–0947; e-mail *niceatm@niehs.nih.gov.* Persons submitting written comments should include their contact information (name, affiliation, address, telephone and fax numbers, and e-mail) and sponsoring organization, if any. Public comments received in response to this **Federal Register** notice will be posted on the NICEATM/ICCVAM web site (*http://iccvam.niehs.nih.gov*).

**Background**

The International Workshop on In Vitro Methods for Assessing Acute Systemic Toxicity was held October 17–20, 2000, at the Hyatt Regency Crystal City Hotel, 2799 Jefferson Davis Highway, Arlington, VA 22202. The workshop was organized by the NICEATM and ICCVAM, and sponsored by the NIEHS, the NTP, and U.S. EPA. The objectives of the workshop were (1) to assess the current validation status of in vitro test methods that might be useful for assessing the acute systemic toxicity potential of chemicals and (2) to develop recommendations for future research, development, and validation studies that might further enhance the use of in vitro methods for this purpose.

A **Federal Register** notice (Vol. 65, No. 115, pp. 37400–37403, June 14, 2000) requested information and data that should be considered at the workshop, and nominations of expert scientists to participate in the workshop. A second **Federal Register** notice (Vol. 65, No. 184, pp. 57203–57205, September 21, 2000) announced availability of the workshop agenda, registration information, and a background summary of available in vitro methods.

At the workshop, the invited expert scientists were divided into four breakout groups as follows:

Breakout Group 1: In Vitro Screening Methods for Assessing Acute Toxicity
Breakout Group 2: In Vitro Methods for Toxicokinetic Determinations
Breakout Group 3: In Vitro Methods for Predicting Organ-Specific Toxicity
Breakout Group 4: Chemical Data Sets for Validation of In Vitro Acute Toxicity Test Methods

Each breakout group subsequently prepared a written report that represented the consensus of the invited scientists assigned to that group and these reports are included in the Workshop Report. It also includes as appendices: A detailed workshop agenda; summary minutes of plenary sessions and public comments; the background document for workshop participants; a NICEATM summary of the Multicenter Evaluation of In Vitro Cytotoxicity (MEIC); a summary of Federal regulations on acute toxicity; related **Federal Register** notices; and ICCVAM test method recommendations. The ICCVAM test recommendations were developed following the workshop to forward to Federal agencies in accordance with Pub. L. 106–545.

The Breakout Group on In Vitro Screening Methods recommended preparation of a document that would provide guidance on how to use in vitro data to estimate starting doses for in vivo acute toxicity studies. Three scientists subsequently collaborated with the NICEATM to develop a "Guidance Document on Using In Vitro Data to Estimate In Vivo Starting Doses for Acute Toxicity". The Guidance Document provides SOPs for conducting two in vitro cytotoxicity tests (the BALB/c 3T3 Neutral Red Uptake (NRU) and the Normal Human Keratinocyte (NHK) NRU assays) and instruction for using these assays to estimate starting doses for in vivo testing. The Guidance Document also includes the ZEBET (German National Centre for the Documentation and Evaluation of Alternatives to Animal Experimentation) Registry of Cytotoxicity (RC) Regression Analysis that provides a mathematical relationship between acute oral systemic rodent toxicity and in vitro basal cytotoxicity using data for 347 chemicals (Halle, 1998; Spielmann et al., 1999). The Guidance Document expands on an approach suggested by Spielmann and colleagues that—as an initial step—the relationship found with the RC data be used to predict starting doses for subsequent in vivo acute lethality assays.

**Additional Information About ICCVAM and NICEATM**

ICCVAM, with 15 participating Federal agencies, was established in 1997 to coordinate interagency issues on toxicological test method development, validation, regulatory acceptance, and national and international harmonization. The ICCVAM Authorization Act of 2000 (Pub. L. 106–545) formally authorized and designated ICCVAM as a permanent committee administered by the NIEHS with specific duties that include the technical evaluation of new and alternative testing methods. ICCVAM is charged with developing test recommendations based on those technical evaluations, and forwarding these to Federal agencies for their consideration. The NICEATM was established in 1998 to coordinate and facilitate ICCVAM activities, to provide peer review for validation activities and to promote communication with stakeholders. The NICEATM is located at the NIEHS, Research Triangle Park, NC. Additional information concerning ICCVAM and NICEATM can be found on the ICCVAM/NICEATM web site at *http://iccvam.niehs.nih.gov.* In accordance with Public Law 106–545, the Workshop Report and the Guidance Document will be forwarded with ICCVAM test recommendations to Federal agencies for their consideration.

**References**

Halle, W. 1998. Toxizitätsprüfungen in Zellkulturen für eine Vorhersage der akuten Toxizität ($LD_{50}$) zur Einsparung von Tierversuchen. Life Sciences/Lebenswissenschaften, Volume 1, 94 pp., Jülich: Forschungszentrum Jülich.

Spielmann, H., E. Genschow, M. Liebsch, and W. Halle. 1999. Determination of the starting dose for acute oral toxicity ($LD_{50}$) testing in the up and down procedure (UDP) from cytotoxicity data. ATLA 27: 957–966.

Dated: September 18, 2001.

**Samuel H. Wilson,**

*Deputy Director, National Institute of Environmental Health Sciences.*

[FR Doc. 01–24370 Filed 9–27–01; 8:45 am]

BILLING CODE 4140–01–P

**Federal Register** / Vol. 65, No. 184 / Thursday, September 21, 2000 / Notices **57203**

signed Confidential Disclosure Agreement will be required to receive a copy of any pending patent applications.

**SUPPLEMENTARY INFORMATION:** Gaucher Disease is a rare inborn error of metabolism which affects between 10,000 and 20,000 people worldwide, 40% in the United States. Gaucher Disease is the most common lipid storage disease. The symptoms associated with Gaucher Disease result from the accumulation of a lipid called glucocerebroside. This lipid is a byproduct of the normal recycling of red blood cells. When the gene with the instructions for producing an enzyme to break down this byproduct is defective, the lipid accumulates. The lipid is found in many places in the body, but most commonly in the macrophages in the bone marrow. There it interferes with normal bone marrow functions, such as production of platelets (leading to bleeding and bruising) and red blood cells (leading to anemia) and potentially death. The presence of glucocerebroside seems to also trigger the loss of minerals in the bones, causing the bones to weaken, and can interfere with the bone's blood supply.

The field of use is directed to the development of therapies for remedying enzyme deficiencies in the treatment of Gaucher Disease.

The prospective exclusive license will be royalty-bearing and will comply with the terms and conditions of 35 U.S.C. 209 and 37 CFR 404.7. The prospective exclusive license may be granted unless, within ninety (90) days from the date of this published notice, NIH receives written evidence and argument that establishes that the grant of the license would not be consistent with the requirements of 35 U.S.C. 209 and 37 CFR 404.7.

Applications for a license filed in response to this notice will be treated as objections to the grant of the contemplated license. Comments and objections submitted in response to this notice will not be made available for public inspection, and, to the extent permitted by law, will not be released under the Freedom of Information Act, 5 U.S.C. 552.

Dated: September 11, 2000.

**Jack Spiegel,**

*Director, Division of Technology Development and Transfer, Office of Technology Transfer.*

[FR Doc. 00–24241 Filed 9–20–00; 8:45 am]

BILLING CODE 4140–01–M

## DEPARTMENT OF HEALTH AND HUMAN SERVICES

### Public Health Service

### National Institute of Environmental Health Sciences (NIEHS), National Institutes of Health (NIH), National Toxicology Program (NTP); Notice of an International Workshop on *In Vitro* Methods for Assessing Acute Systemic Toxicity, co-sponsored by NIEHS, NTP and the U.S. Environmental Protection Agency (EPA): Workshop Agenda and Registration Information

**SUMMARY:** Pursuant to Public Law 103–43, notice is hereby given of a public meeting sponsored by NIEHS, the NTP, and the EPA, and coordinated by the Interagency Coordinating Committee on the Validation of Alternative Methods (ICCVAM) and the NTP Interagency Center for the Evaluation of Alternative Toxicological Methods (NICEATM). The agenda topic is a scientific workshop to assess the current status of *in vitro* test methods for evaluating the acute systemic toxicity potential of chemicals and to develop recommendations for future research, development, and validation studies. The workshop will take place on October 17–20, 2000, at the Hyatt Regency Crystal City Hotel, 2799 Jefferson Davis Highway, Arlington, VA, 22202. The meeting will be open to the public.

In a previous **Federal Register** notice (Vol. 65, No. 115, pp. 37400–37403), ICCVAM requested information and data that should be considered at the Workshop and nominations of expert scientists to participate in the Workshop. A preliminary list of relevant studies to be considered for the Workshop was also provided. As a result of this request, an ICCVAM interagency Workshop Organizing Committee has selected an international group of scientific experts to participate in this Workshop. NICEATM, in collaboration with ICCVAM, has developed a background summary of data and performance characteristics for available *in vitro* methods. This summary will be made available to invited expert scientists and the public before the Workshop. Requests for the summary can be made to the address given below. This notice provides an agenda, registration information, and updated details about the Workshop.

### Workshop Background and Scope

*A. Background*

Acute toxicity testing is conducted to determine the hazards of various chemicals and products. This information is used to properly classify and label materials as to their lethality in accordance with an internationally harmonized system (OECD, 1998). Non-lethal endpoints may also be evaluated to identify potential target organ toxicity, toxicokinetic parameters, and dose-response relationships. While animals are currently used to evaluate acute toxicity, recent studies suggest that *in vitro* methods may also be helpful in predicting acute toxicity.

Studies by Spielmann *et al.* (1999) suggest that *in vitro* cytotoxicity methods may be useful in predicting a starting dose for *in vivo* studies, and thus may potentially reduce the number of animals necessary for such determinations. Other studies (*e.g.*, Ekwall *et al.*, 2000) have indicated an association between chemical concentrations leading to *in vitro* cytotoxicity and human lethal blood concentrations. A program to assess toxicokinetics and target organ toxicity utilizing *in vitro* methods has been proposed that may provide enhanced predictions of toxicity and potentially reduce or replace animal use for some tests (Ekwall *et al.*, 1999). However, many of the necessary *in vitro* methods for this program have not yet been developed. Other methods have not been evaluated in validation studies to determine their usefulness and limitations for generating information to meet regulatory requirements for acute toxicity testing. Development and validation of *in vitro* methods which can establish accurate dose-response relationships will be necessary before such methods can be considered for the reduction or replacement of animal use for acute toxicity determinations.

This workshop will examine the status of available *in vitro* methods for assessing acute toxicity. This includes screening methods for acute toxicity, such as methods that may be used to predict the starting dose for *in vivo* animal studies, and methods for generating information on toxicokinetics, target organ toxicity, and mechanisms of toxicity. The workshop will develop recommendations for validation efforts necessary to characterize the usefulness and limitations of these methods. Recommendations will also be developed for future mechanism-based research and development efforts that might further improve *in vitro* assessments of acute systemic lethal and non-lethal toxicity.

*B. Objectives of the Workshop*

Four major topics will be addressed:

- *In Vitro* Screening Methods for Assessing Acute Toxicity;

• *In Vitro* Methods for Toxicokinetic Determinations;
• *In Vitro* Methods for Predicting Organ Specific Toxicity; and
• Chemical Data Sets for Validation of *In Vitro* Acute Toxicity Test Methods.

The objectives of the meeting are to:

1. Review the status of *in vitro* methods for assessing acute systemic toxicity:

a. Review the validation status of available *in vitro* screening methods for their usefulness in estimating *in vivo* acute toxicity,

b. Review *in vitro* methods for predicting toxicokinetic parameters important to acute toxicity (*i.e.*, absorption, distribution, metabolism, elimination), and

c. Review *in vitro* methods for predicting specific target organ toxicity;

2. Recommend candidate methods for further evaluation in prevalidation and validation studies;

3. Recommend validation study designs that can be used to characterize adequately the usefulness and limitations of proposed *in vitro* methods;

4. Identify reference chemicals that can be used for development and validation of *in vitro* methods for assessing *in vivo* acute toxicity; and

5. Identify priority research efforts necessary to support the development of mechanism-based *in vitro* methods to assess acute systemic toxicity. Such efforts might include incorporation and evaluation of new technologies, such as gene microarrays, and development of methods necessary to generate dose response information.

**Workshop Information**

*A. Workshop Agenda*

Tuesday, October 17, 2000

8:30 a.m.—Opening Plenary Session
• Workshop Introduction
• Welcome from the National Toxicology Program (NTP)
• Overview of ICCVAM and NICEATM
• Acute Toxicity: Historical and Current Regulatory Perspectives
• Acute Toxicity Data: A Clinical Perspective
10:30 a.m.—*In Vitro* Approaches to Estimate the Acute Toxicity Potential of Chemicals
• Estimating Starting Doses for *In Vivo* Studies using *In Vitro* Data
• An Integrated Approach for Predicting Systemic Toxicity
• Opportunities for Future Progress
Public Comment
Breakout Groups' Charges
12:30 p.m.—Lunch Break
1:45 p.m.—Breakout Groups: Identifying What Is Needed from *In Vitro* Methods
• Screening Methods;
• Toxicokinetic Determinations;
• Predicting Organ Specific Toxicity and Mechanisms; and
• Chemical Data Sets for Validation
5:30 p.m.—Adjourn for the Day

Wednesday, October 18, 2000

8:00 a.m.—Plenary Session—Status Reports by Breakout Group Co-Chairs
9:00 a.m.—Breakout Groups: Current Status of *In Vitro* Methods for Acute Toxicity
• Screening Methods;
• Toxicokinetic Determinations;
• Predicting Organ Specific Toxicity and Mechanisms; and
• Chemical Data Sets for Validation
12:00 p.m.—Lunch Break
1:30 p.m.—Breakout Groups: Current Status of *In Vitro* Methods for Acute Toxicity (Cont'd)
5:30 p.m.—Adjourn for the Day

Thursday, October 19, 2000

8:00 a.m.—Plenary Session—Status Reports by Breakout Group Co-Chairs
9:00 a.m.—Breakout Groups: Future Directions for *In Vitro* Methods for Acute Toxicity
• Screening Methods;
• Toxicokinetic Determinations;
• Predicting Organ Specific Toxicity and Mechanisms; and
• Chemical Data Sets for Validation
12:00 p.m.—Lunch Break
1:30 p.m.—Breakout Groups: Future Directions for *In Vitro* Methods for Acute Toxicity (Cont'd)
5:30 p.m.—Adjourn for the Day

Friday, October 20, 2000

8:00 a.m.—Closing Plenary Session—Reports by Breakout Group Co-Chairs
• Screening Methods;
• Toxicokinetic Determinations;
• Predicting Organ Specific Toxicity and Mechanisms; and
• Chemical Data Sets for Validation
Public Comment
Closing Comments
12:15 p.m.—Adjourn

*B. Workshop Registration*

The Workshop meeting will be open to the public, limited only by the space available. Due to space limitations, advance registration is requested by October 13, 2000. Registration forms can be obtained by contacting NICEATM at the address given below or by accessing the on-line registration form at: *http://iccvam.niehs.nih.gov/invi_reg.htm*. Other relevant Workshop information (*i.e.*, accommodations, transportation, etc.) is also provided at this website.

*C. Public Comment*

The Public is invited to attend the Workshop and the number of observers will be limited only by the space available. Two formal public comment sessions on Tuesday, October 17th and Friday, October 20th will provide an opportunity for interested persons or groups to present their views and comments to the Workshop participants (please limit to one speaker per group). Additionally, time will be allotted during each of the Breakout Group sessions for general discussion and comments from observers and other participants. The Public is invited to present oral comments or to submit comments in writing for distribution to the Breakout Groups to NICEATM at the address given below by October 13, 2000. Oral presentations will be limited to seven minutes per speaker to allow for a maximum number of presentations. Individuals presenting oral comments are asked to provide a hard copy of their statement at registration. For planning purposes, persons wishing to give oral comments are asked to check the box provided on the Registration Form, although requests for oral presentations will also be accepted on-site (subject to availability of time). Persons registering for oral comments or submitting written remarks are asked to include their contact information (name, address, affiliation, telephone, fax, and e-mail).

**Guidelines for Requesting Registration Form and Submission of Public Comment**

Requests for registration information and submission of public comments should be directed to the NTP Interagency Center for the Evaluation of Alternative Toxicological Methods, Environmental Toxicology Program, NIEHS/NTP, MD EC–17, PO Box 12233, Research Triangle Park, NC 27709; 919–541–3398 (phone); 919–541–0947 (fax); *iccvam@niehs.nih.gov* (e-mail). Public comments should be accompanied by complete contact information including name, (affiliation, if applicable), address, telephone number, and e-mail address.

**References**

• OECD (Organisation for Economic Cooperation and Development). (1998). Harmonized integrated hazard classification system for human health and environmental effects of chemical substances. OECD, Paris. (website: *http://www.oecd.org//ehs/Class/HCL6.HTM*)
• Spielmann, H., Genschow, E., Leibsch, M., and Halle, W. (1999) Determination of the starting dose for

acute oral toxicity (LD50) testing in the up and down procedure (UDP) from cytotoxicity data. ATLA, 27(6), 957–966.

- Ekwall, B., Ekwall, B., and Sjorstrom, M. (2000) MEIC evaluation of acute systemic toxicity: Part VIII. Multivariate partial least squares evaluation, including the selection of a battery of cell line tests with a good prediction of human acute lethal peak blood concentrations for 50 chemicals. ATLA, 28, Suppl. 1, 201–234.
- Ekwall, B., Clemedson, C., Ekwall, B., Ring, P., and Romert, L. (1999) EDIT: A new international multicentre programme to develop and evaluate batteries of *in vitro* tests for acute and chronic systemic toxicity. ATLA 27, 339–349.

Dated: September 12, 2000.

**Samuel H. Wilson,**

*Deputy Director, National Institute of Environmental Health Sciences.*

[FR Doc. 00–24244 Filed 9–20–00; 8:45 am]

BILLING CODE 4140–01–P

## DEPARTMENT OF HOUSING AND URBAN DEVELOPMENT

**[Docket No. FR–4463–N–04]**

### Notice of FHA Debenture Call

**AGENCY:** Office of the Assistant Secretary for Housing-Federal Housing Commissioner, HUD.

**ACTION:** Notice.

**SUMMARY:** This Notice announces a debenture recall of certain Federal Housing Administration debentures, in accordance with authority provided in the National Housing Act.

**FOR FURTHER INFORMATION CONTACT:** Richard Keyser, Room 3119P, L'Enfant Plaza, Department of Housing and Urban Development, 451 Seventh Street, SW., Washington, DC 20410, telephone (202) 755–7510 x137. This is not a toll-free number.

**SUPPLEMENTARY INFORMATION:** Pursuant to Sections 204(c) and 207(j) of the National Housing Act, 12 U.S.C. 1710(c), 1713(j), and in accordance with HUD's regulation at 24 CFR 203.409 and § 207.259(e)(3), the Federal Housing Commissioner, with approval of the Secretary of the Treasury, announces the call of all Federal Housing Administration debentures, with a coupon rate of 6.625 percent or above, except for those debentures subject to "debenture lock agreements", that have been registered on the books of the Federal Reserve Bank of Philadelphia, and are, therefore, "outstanding" as of September 30, 2000. The date of the call is January 1, 2001.

The debentures will be redeemed at par plus accrued interest. Interest will cease to accrue on the debentures as of the call date. Final interest on any called debentures will be paid with the principal at redemption.

During the period from the date of this notice to the call date, debentures that are subject to the call may not be used by the mortgagee for a special redemption purchase in payment of a mortgage insurance premium.

No transfer of debentures covered by the foregoing call will be made on the books maintained by the Treasury Department on or after October 1, 2000. This does not affect the right of the holder of a debenture to sell or assign the debenture on or after this date. Payment of final principal and interest due on January 1, 2001, will be made automatically to the registered holder.

Dated: September 15, 2000.

**William C. Apgar,**

*Assistant Secretary for Housing-Federal Housing Commissioner.*

[FR Doc. 00–24288 Filed 9–20–00; 8:45 am]

BILLING CODE 4210–27–M

## DEPARTMENT OF THE INTERIOR

### Fish and Wildlife Service

### Notice of Receipt of Applications for Permit

**Endangered Species**

The following applicants have applied for a permit to conduct certain activities with endangered species. This notice is provided pursuant to Section 10(c) of the Endangered Species Act of 1973, *as amended* (16 U.S.C. 1531, *et seq.*):

PRT–841026

*Applicant:* Thane Wibbels, University of Alabama at Birmingham, Birmingham, AL

The applicant requests a permit to import up to 1000 blood samples and up to 500 tissue samples taken from Kemp's Ridley sea turtles (*Lepidochelys kempii*) in Mexico for enhancement of the species through scientific research. This notification covers activities conducted by the applicant over a five year period.

PRT–032758

*Applicant:* Exotic Feline Breeding Compound, Inc., Rosamond, CA

The applicant requests a permit to import 1 captive-born male Amur leopard (*Panthera pardus orientalis*) from the Novosibirsk Zoo, Russia for the purpose of propagation for the enhancement of the survival of the species.

PRT–032757

*Applicant:* Omaha's Henry Doorly Zoo, Omaha, NE

The applicant requests a permit to import 1 captive-born female Sumatran tiger (*Panthera tigris sumatrae*) from the Surabaya Zoo, Indonesia for the purpose of propagation for the enhancement of the survival of the species.

PRT–031061

*Applicant:* Susan E. Aronoff, Tampa, FL, 33624

The applicant requests a permit to import 1 captive-born male cheetah (*Acinonyx jubatus*) from the Endangered Animal Foundation, Driftweg, the Netherlands to enhance the survival of the species through conservation education.

PRT–830414

*Applicant:* Duke University Primate Center, Durham, NC

The applicant requests re-issuance of a permit to import two male and three female wild-caught golden-crowned sifakas (*Propithecus tattersalli*) from Dariana, Madagascar for the purpose of propagation for the enhancement of the survival of the species. This notification covers requests for re-issuances of the permit by the applicant over a five year period.

PRT–808256

*Applicant:* Duke University Primate Center, Durham, NC

The applicant requests re-issuance of a permit to import one male and two female wild-caught diademed sifakas (*Propithecus diadema*) from the Department of Water and Forest, Maramize, Madagascar for the purpose of propagation for the enhancement of the survival of the species. This notification covers requests for re-issuances of the permit by the applicant over a five year period.

PRT–031796

*Applicant:* Larry Edward Johnson, Boerne, TX

The applicant requests a permit to export two male and two female captive-born ring-tailed lemurs (*Catta lemur*) to Munchi's Zoo, Buenos Aires, Argentina to enhance the survival of the species through conservation education and captive propagation.

PRT–026102

*Applicant:* Elizabeth G. Stone/University of Georgia, Athens, GA

The applicant requests a permit to import salvaged specimens, non-viable eggs, and biological samples from Thick-billed parrots (*Rhynchopsitta pachyrhyncha*) collected in the wild in Mexico, for scientific research. This

***[This Page Intentionally Left Blank]***

is hereby given of the following meeting.

The meeting will be closed to the public in accordance with the provisions set forth in sections 552b(c)(4) and 552b(c)(6), Title 5 U.S.C., as amended. The grant applications and the discussions could disclose confidential trade secrets or commercial property such as patentable material, and personal information concerning individuals associated with the grant applications, the disclosure of which would constitute a clearly unwarranted invasion of personal privacy.

*Name of Committee:* National Institute of Diabetes and Digestive and Kidney Diseases Special Emphasis Panel, ZDK1 GRB 4 (01).

*Date:* June 16, 2000.

*Time:* 8:00 am to 2:00 pm.

*Agenda:* To review and evaluate grant applications.

*Place:* Embassy Suites Hotel, 1300 Concourse Drive, Linthicum, Maryland 21090.

*Contact Person:* William E. Elzinga, Scientific Review Administrator, Review Branch, DEA, NIDDK, Room 647, 6707 Democracy Boulevard, National Institutes of Health, Bethesda, MD 20892–6600, (301) 594–8895.

This notice is being published less than 15 days prior to the meeting due to the timing limitations imposed by the review and funding cycle.

(Catalogue of Federal Domestic Assistance Program Nos. 93.847, Diabetes, Endocrinology and Metabolic Research; 93.848, Digestive Diseases and Nutrition Research; 93.849, Kidney Diseases, Urology and Hematology Research, National Institutes of Health, HHS)

Dated: June 8, 2000.

**LaVerne Y. Stringfield,**

*Director, Office of Federal Advisory Committee Policy.*

[FR Doc. 00–14960 Filed 6–13–00; 8:45 am]

BILLING CODE 4140–01–M

---

## DEPARTMENT OF HEALTH AND HUMAN SERVICES

### National Institute of Health

### National Institute of Nursing Research; Notice of Closed Meeting

Pursuant to section 10(d) of the Federal Advisory Committee Act, as amended (5 U.S.C. Appendix 2), notice is hereby given of the following meeting.

The meeting will be closed to the public in accordance with the provisions set forth in sections 552b(c)(4) and 552b(c)(6). Title 5 U.S.C., as amended. The grant applications and the discussions could disclose confidential trade secrets or commercial property such as patentable material, and personal information concerning individuals associated with the grant applications, the disclosure of which would constitute a clearly unwarranted invasion of personal privacy.

*Name of Committee:* National Institute of Nursing Research Special Emphasis Panel, NINR Career Transitional Award Applications (K22s).

*Date:* June 21, 2000.

*Time:* 3:00 PM to 5:00 PM.

*Agenda:* To review and evaluate grant applications.

*Place:* Bethesda Holiday Inn, 8120 Wisconsin Avenue, Bethesda, MD 20852.

*Contact Person:* Mary J. Stephens-Frazier, Scientific Review Administrator, National Institute of Nursing Research, National Institutes of Health, Natcher Building, Room 3AN32, (301) 594–5971.

This notice is being published less than 15 days prior to the meeting due to the timing limitations imposed by the review and funding cycle.

(Catalogue of Federal Domestic Assistance Program Nos. 93.361, Nursing Research, National Institute of Health, HHS)

Dated: June 8, 2000.

**LaVerne Y. Stringfield,**

*Director, Office of Federal Advisory Committee Policy*

[FR Doc. 00–14963 Filed 6–13–00; 8:45 am]

BILLING CODE 4140–01–M

---

## DEPARTMENT OF HEALTH AND HUMAN SERVICES

### National Institutes of Health

### National Institute of Nursing Research; Notice of Closed Meeting

Pursuant to section 10(d) of the Federal Advisory Committee Act, as amended (5 U.S.C. Appendix 2), notice is hereby given of the following meeting.

The meeting will be closed to the public in accordance with the provisions set forth in sections 552b(c)(4) and 552b(c)(6), Title 5 U.S.C., as amended. The grant applications and the discussions could disclose confidential trade secrets or commercial property such as patentable material, and personal information concerning individuals associated with the grant applications, the disclosure of which would constitute a clearly unwarranted invasion of personal privacy.

*Name of Committee:* National Institute of Nursing Research Special Emphasis Panel, NINR/ORMH Mentored Research Scientist Development Award for Minority Investigators (KO1s).

*Date:* June 21, 2000.

*Time:* 8:30 a.m. to 2 p.m.

*Agenda:* To review and evaluate grant applications.

*Place:* Bethesda Holiday Inn, 8120 Wisconsin Avenue, Bethesda, MD 20814.

*Contact Person:* Mary J. Stephens-Frazier, Scientific Review Administrator, National Institute of Nursing Research, National Institutes of Health, Natcher Building, Room 3AN32, Bethesda, MD 20892, (301) 594–5971.

This notice is being published less than 15 days prior to the meeting due to the timing limitations imposed by the review and funding cycle.

(Catalogue of Federal Domestic Assistance Program Nos. 93.361, Nursing Research, National Institutes of Health, HHS)

Dated: June 8, 2000.

**LaVerne Y. Stringfield,**

*Director, Office of Federal Advisory Committee Policy.*

[FR Doc. 00–14964 Filed 6–13–00; 8:45 am]

BILLING CODE 4140–01–M

---

## DEPARTMENT OF HEALTH AND HUMAN SERVICES

### Public Health Service

### National Institute of Environmental Health Sciences (NIEHS), National Institutes of Health (NIH), National Toxicology Program (NTP); Notice of an International Workshop on In Vitro Methods for Assessing Acute Systemic Toxicity, co-sponsored by NIEHS, NTP and the U.S. Environmental Protection Agency (EPA): Request for Data and Suggested Expert Scientists

**SUMMARY:** Pursuant to Public Law 103–43, notice is hereby given of a public meeting sponsored by NIEHS, the NTP, and the EPA, and coordinated by the Interagency Coordinating Committee on the Validation of Alternative Methods (ICCVAM) and the NTP Interagency Center for the Evaluation of Alternative Toxicological Methods (NICEATM). The agenda topic is a scientific workshop to assess the current status of in vitro test methods for evaluating the acute systemic toxicity potential of chemicals, and to develop recommendations for future development and validation studies. The workshop will take place on October 17–20, 2000 at the Hyatt Regency Crystal City Hotel, 2799 Jefferson Davis Highway, Arlington, VA, 22202. The meeting will be open to the public.

In preparing for this Workshop, ICCVAM is requesting: (1) Information and data that should be considered at the Workshop, including relevant data on currently available in vitro methods for assessing acute systemic toxicity; and (2) nominations of expert scientists to participate in the Workshop. An agenda, registration information, and other details will be provided in a subsequent **Federal Register** notice.

**Federal Register** / Vol. 65, No. 115 / Wednesday, June 14, 2000 / Notices **37401**

**Background**

ICCVAM, with participation by 14 Federal regulatory and research agencies and programs, was established in 1997 to coordinate issues relating to the development, validation, acceptance, and national/international harmonization of toxicological test methods. ICCVAM seeks to promote the scientific validation and regulatory acceptance of new and improved test methods applicable to Federal agencies, including methods that may reduce or replace animal use, or that refine protocols to lessen animal pain and distress. The Committee's functions include the coordination of interagency reviews of toxicological test methods and communication with stakeholders throughout the process of test method development and validation. The following Federal regulatory and research agencies participate:

Consumer Product Safety Commission
Department of Defense
Department of Energy
Department of Health and Human Services
  Agency for Toxic Substances and Disease Registry
  Food and Drug Administration
  National Institute for Occupational Safety and Health/CDC
  National Institutes of Health
  National Cancer Institute
  National Institute of Environmental Health Sciences
  National Library of Medicine
Department of the Interior
Department of Labor
  Occupational Safety and Health Administration
  Department of Transportation
  Research and Special Programs Administration
  Environmental Protection Agency

NICEATM was established in 1998 and provides operational support for the ICCVAM. NICEATM and ICCVAM collaborate to carry out activities associated with the development, validation, and regulatory acceptance of proposed new and improved test methods. These activities may include:

• Test Method Workshops, which are convened as needed to evaluate the adequacy of current methods for assessing specific toxicities, to identify areas in need of improved or new testing methods, to identify research efforts that may be needed to develop new test methods, and to identify appropriate development and validation activities for proposed new methods.

• Expert Panel Meetings, which are typically convened to evaluate the validation status of a method following the completion of initial development and pre-validation studies. Expert Panels are asked to recommend additional validation studies that might be helpful in further characterizing the usefulness of a method, and to identify any additional research and development efforts that might enhance the effectiveness of a method.

• Independent Peer Review Panel Meetings, which are typically convened following the completion of comprehensive validations studies on a test method. Peer Review Panels are asked to develop scientific consensus on the usefulness and limitations of test methods to generate information for specific human health and/or ecological risk assessment purposes. Following the independent peer review of a test method, ICCVAM forwards recommendations on its usefulness to agencies for their consideration. Federal agencies then determine the regulatory acceptability of a method according to their mandates.

Additional information about ICCVAM and NICEATM can be found at the website: *http://iccvam.niehs.nih.gov.*

**Workshop Background and Scope**

*A. Background*

Federal regulatory agencies require toxicity testing to determine the safety or hazard of various chemicals and products prior to human exposure. Agencies use this information to properly classify and label products as to their hazard potential. Acute oral toxicity determinations are currently made using animals. However, recent studies (e.g., Spielmann et al., 1999) suggest that in vitro cytotoxicity methods may be useful in predicting a starting dose for in vivo studies, and thus may potentially reduce the number of animals necessary for such determinations.

Other studies (e.g., Ekwall et al., 2000) have indicated an association between in vitro cytotoxicity and human lethal blood concentrations. However, these in vitro methods have not yet been evaluated in validation studies to determine their usefulness and limitations for generating acute toxicity testing information necessary to meet regulatory testing requirements. Additionally, other in vitro methods would likely be necessary to establish accurate dose-response relationships before such methods could substantially reduce or replace animal use for acute toxicity determinations.

This workshop will examine the status of available in vitro methods and develop recommendations for validation efforts necessary to characterize the usefulness and limitations of existing methods. Recommendations for future research and development efforts that might further enhance the usefulness of in vitro assessments of acute systemic lethal toxicity will also be developed.

*B. Objectives of the Workshop*

Four major topics will be addressed:

1. General cytotoxicity methods predictive of acute lethal toxicity;
2. Toxicokinetic and organ specific toxicity methods;
3. Reference chemicals for validation of the above methods; and
4. The use of quantitative structure activity relationships (QSAR) and chemical/physical properties for predicting acute lethal toxicity.

The objectives of the meeting are to:

1 a. Identify and review the status of in vitro general cytotoxicity screening methods that may reduce animal use for assessing acute systemic toxicity;

b. Identify information from in vitro methods necessary to predict acute systemic toxicity and review the status of relevant methods (*e.g.*, in vitro methods to assess gut absorption, metabolism, blood-brain barrier penetration, volume distribution to critical target organs, and specific target organ toxicity);

2. Identify candidate methods for further evaluation in prevalidation and validation studies;

3. Identify reference chemicals useful for development and validation of in vitro methods for assessing acute systemic toxicity;

4. Identify validation study designs needed to adequately characterize the proposed methods in 2.; and

5. Identify priority research efforts necessary to support the development of in vitro methods to adequately assess acute systemic toxicity. Such efforts might include incorporation and evaluation of new technologies such as gene microarrays, and development of methods necessary to generate dose response information.

*C. Methods for Consideration*

Given the breadth of the workshop topics, many methods are likely to be considered relevant to the discussion. Methods will include but are not limited to those proposed in the Multicentre Evaluation of In Vitro Cytotoxicity (MEIC) battery (*http://www.ctlu.se*). A background document summarizing the data and performance characteristics for available methods is being prepared by NICEATM in collaboration with the ICCVAM interagency organizing committee. Information received as a result of this **Federal Register** notice will be

considered for inclusion in the background document. In formulating its recommendations, the Workshop participants will evaluate information in the background document and relevant information from other sources.

*D. Test Method Data and Information Sought*

Data are sought from completed, ongoing, or planned studies that provide comparative performance data for in vitro methods compared to currently accepted in vivo methods for determining acute lethal toxicity and hazard classification. Data from test methods that provide toxicokinetic and specific target organ toxicity information are also sought. Submissions should describe the extent to which established criteria for validation and regulatory acceptance have been addressed. These criteria are provided in "Validation and Regulatory Acceptance of Toxicological Test Methods: A Report of the ad hoc Interagency Coordinating Committee on the Validation of Alternative Methods," NIH publication 97–3981 (*http://ntp-server.niehs.nih.gov/htdocs/ICCVAM/iccvam.html*). Where possible, submitted data and information should adhere to the guidance provided in the document, "Evaluation of the Validation Status of Toxicological Methods: General Guidelines for Submissions to ICCVAM," NIH Publication 99–4496, (*http://iccvam.niehs.nih.gov/doc1.htm*). Both publications are also available on request from NICEATM at the address provided below. Relevant information submitted in response to this request will be incorporated into the background material provided to Workshop participants. A preliminary list of relevant studies is provided at the end of this announcement, and public comment and suggestions for additions are invited.

NICEATM and the ICCVAM interagency workshop organizing committee will compile information on the studies to be considered at the Workshop. All data should be submitted by July 15, 2000 in order to ensure full consideration.

*E. Request for Nomination of Expert Scientists for the Test Method Workshop*

NICEATM is soliciting nominations for expert scientists to participate in the Workshop. (See Guidelines for Submission of Comments below). Types of expertise likely to be relevant include acute toxicity testing in animals, evaluation and treatment of acute toxicity in humans, development and use of in vitro methodologies, statistical data analysis, knowledge of chemical data sets useful for validation of acute toxicity studies, and hazard classification of chemicals and products. Expertise need not be limited to these areas, nor will these areas necessarily be included on the Panel. An appropriate breadth of expertise will be sought. If other areas of scientific expertise are recommended, the rationale should be provided.

Nominations should be accompanied by complete contact information including name, address, institutional affiliation, telephone number, and e-mail address. The rationale for nomination should be provided. If possible, a biosketch or a curriculum vitae should be included. To avoid the potential for candidates being contacted by a large number of nominators, candidates need not be contacted prior to nomination.

Workshop experts will be selected by an ICCVAM interagency workshop organizing committee after considering all nominations received from the public as well as nominations developed internally. All nominees will be contacted for interest and availability, and curricula vitae will be solicited from the nominees. Candidates will be required to disclose potential conflicts of interest.

**Schedule for the Workshop**

The Workshop will take place on October 17–20, 2000 at the Hyatt Regency Crystal City Hotel, 2799 Jefferson Davis Highway, Arlington, VA 22202. The Workshop meeting will be open to the public, limited only by space available.

Submitted methods and supporting data will be reviewed during the July to August 2000 timeframe and a background review document will be prepared by NICEATM in collaboration with the ICCVAM interagency organizing committee. The background information will be made available to Workshop experts for discussion at the meeting and will be available to the Public in advance of the Workshop.

**Public Input Invited**

As described above, ICCVAM invites comments on the scope and process for the review; comments on the ICCVAM preliminary list of studies for consideration; the submission of other test methods for consideration; and the nomination of experts to participate in the Workshop. Nominations must be submitted within 30 days of the publication date of this notice, and other information should be submitted by July 15, 2000.

**Guidelines for Submission of Public Comment**

Correspondence should be directed to Dr. William S. Stokes, NTP Interagency Center for the Evaluation of Alternative Toxicological Methods, Environmental Toxicology Program, NIEHS/NTP, MD EC–17, PO Box 12233, Research Triangle Park, NC 27709; 919–541–3398 (phone); 919–541–0947 (fax); *iccvam@niehs.nih.gov* (e-mail). Public comments should be accompanied by complete contact information including name, (affiliation, if applicable), address, telephone number, and e-mail address.

**Preliminary List of Studies to be Considered for the Workshop on In Vitro Methods for Assessing Acute Systemic Toxicity**

ICCVAM has compiled a preliminary list of relevant studies. The public is invited to comment on this list, and suggestions for additions may be submitted. (See Section of this **Federal Register** announcement on Guidelines for Submission of Public Comments).

Studies that may be completed but not published are not included here. This list provides examples of studies and information that may be appropriate for consideration by the Workshop experts.

Balls, M., Blaauboer, B.J., Fentem, J.H., Bruner, L., Combes, R.D., Ekwall, B., Fielder, R.J., Guillouzo, A., Lewis, R.W., Lovell, D.P., Reinhardt, C.A., Repetto, G., Sladowski, D., Spielmann, H., and Zucco, F. (1995) Practical aspects of the validation of toxicity test procedures—The report and recommendations of ECVAM Workshop 5. ATLA 23, 129–147.

Bernson, V., Bondesson, I., Ekwall, B., Stenberg, K., and Walum, E. (1987) A multicenter evaluation study of *in vitro* cytotoxicity. ATLA, 14, 144–145.

Bondesson, I., Ekwall, B., Stenberg, K., Romert, L., and Walum, E. (1988) Instruction for participants in the multicenter evaluation study of *in vitro* cytotoxicity (MEIC). ATLA, 15, 191–193.

Bondesson, I., Ekwall, B., Hellberg, S., Romert, L., Stenberg, K., and Walum, E. (1989) MEIC—A new international multicenter project to evaluate the relevance to human toxicity of *in vitro* cytotoxicity tests. Cell Biol. Toxicol., 5, 331–347.

Clemedson, C., and Ekwall, B. (1999) Overview of the final MEIC results: I. The *in vitro-in vivo* evaluation. Toxicology In vitro, 13, 657–663.

Clemedson, C., McFarlane-Abdulla, E., Andersson, M., Barile, F.A., Calleja, M.C., Chesnea, C., Clothier, R., Cottin, M., Curren, R., Daniel-Szolgay, E., Dierickx, P., Ferro, M., Fiskesj", G., Garza-Ocanas, L., Goamez-Lechoan, M.J., Gualden, M., Isomaa, B., Janus, J., Judge, P., Kahru, A., Kemp, R.B., Kerszman, G., Kristen, U., Kunimoto, M., Karenlampi, S., Lavrijsen, K., Lewan L., Lilius, H., Ohno, T., Persoone, G., Roguet, R.,

Romert, L., Sawyer, T., Seibert, H., Shrivastava, R., Stammati, A., Tanaka, N., Torres Alanis, O., Voss, J–U., Wakuri, S., Walum, E., Wang, X., Zucco, F., and Ekwall, B. (1996) MEIC evaluation of acute systemic toxicity. Part I. Methodology of 68 *in vitro* toxicity assays used to test the first 30 reference chemicals. ATLA, 24, Suppl. 1, 249–272.

Clemedson, C., McFarlane-Abdulla, E., Andersson, M., Barile, F.A., Calleja, M.C., Chesne, C., Clothier, R., Cottin, M., Curren, R., Dierickx, P., Ferro, M., Fiskesja,.G., Garza-Ocanas, L., Gomez-Lechon, M.J., Gulden, M., Isomaa, B., Janus, J., Judge, P., Kahru, A., Kemp, R.B., Kerszman, G., Kristen, U., Kunimoto, M., Karenlampi, S., Lavrijsen, K., Lewan L., Lilius, H., Malmsten, A., Ohno, T., Persoone, G., Pettersson, R., Roguet, R., Romert, L., Sandberg,.M.,.Sawyer, T., Seibert, H., Shrivastava, R., Sjostrom, M., Stammati, A., Tanaka, N., Torres Alanis, O., Voss, J–U., Wakuri, S., Walum, E., Wang, X., Zucco, F. and, Ekwall, B. (1996) MEIC evaluation of acute systemic toxicity. Part II. *In vitro* results from 68 toxicity assays used to test the first 30 reference chemicals and a comparative cytotoxicity analysis. ATLA, 24, Suppl. 1, 273–311.

.Clemedson, C., Barile, F.A., Ekwall, B., Gomez-Lechon, M.J., Hall, T., Imai, K., Kahru, A., Logemann, P., Monaco, F., Ohno, T., Segner, H., Sjostrom, M., Valentino, M., Walum, E., Wang, X., and Ekwall, B. (1998). MEIC evaluation of acute systemic toxicity: Part III. *In vitro* results from 16 additional methods used to test the first 30 reference chemicals and a comparative cytotoxicity analysis. ATLA 26, Suppl. 1, 91–129.

Clemedson, C., Aoki, Y., Andersson, M., Barile, F.A., Bassi, A.M., Calleja, M.C., Castano, A., Clothier, R.H., Dierickx, P., Ekwall, B., Ferro, M., Fiskeso, G., Garza-Ocanas, L. Gomez-Lechoan, M.J., Gulden, M., Hall, T., Imai, K., Isomaa, B., Kahru, A., Kerszman, G., Kjellstrand, P., Kristen, U., Kunimoto, M., Karenlampi, S., Lewan, L., Lilius, H., Loukianov, A., Monaco, F., Ohno, T., Persoone, G., Romert, L., Sawyer, T.W., Shrivastava, R., Segner, H., Seibert, H., Sjostrom, M., Stammati, A., Tanaka, N., Thuvander, A., Torres-Alanis, O., Valentino, M., Wakuri, S., Walum, E., Wieslander, A., Wang, X., Zucco, F., and Ekwall, B. (1998). MEIC evaluation of acute systemic toxicity. Part IV. *In vitro* results from 67 toxicity assays used to test reference chemicals 31–50 and a comparative cytotoxicity analysis. ATLA 26, Suppl. 1, 131–183.

Clemedson, C., Barile, F.A., Chesne, C., Cottin, M., Curren, R., Ekwall, B., Ferro, M., Gomez-Lechon, M.J., Imai, K., Janus, J., Kemp, R.B., Kerszman, G., Kjellstrand, P., Lavrijsen, K., Logemann, P., McFarlane-Abdulla, E., Roguet, R., Segner, H., Seibert, H., Thuvander, A., Walum, E., and Ekwall, Bj. (2000) MEIC evaluation of acute systemic toxicity: Part VII. Prediction of human toxicity by results from testing of the first 30 reference chemicals with 27 further *in vitro* assays. ATLA 28, Suppl. 1, 161–200.

Ekwall, B. (1995) The basal cytotoxicity concept, pp 721–725. In Proceedings of the World Congress on Alternatives and Animal Use in the Life Sciences: Education, Research, Testing. Alternative Methods in Toxicology and the Life Sciences, Vol. 11. Mary Ann Liebert, New York, 1995.

Ekwall, B. (1999) Overview of the Final MEIC Results: II. The *In vitro/in vivo* evaluation, including the selection of a practical battery of cell tests for prediction of acute lethal blood concentrations in humans. Toxicol. *In vitro*, 13, 665–673.

Ekwall, B., Gomez-Lechon, M.J., Hellberg, S.,.Bondsson, I., Castell, J.V., Jover, R., Hogberg, J., Ponsoda, X., Stenberg, K., and Walum, E. (1990) Preliminary results from the Scandinavian multicentre evaluation of *in vitro* cytotoxicity (MEIC). Toxicol. *In vitro*, 4, 688–691.

Ekwall, B., Clemedson, C., Crafoord, B., Ekwall, Ba., Hallander, S., Walum E., and Bondesson, I. (1998) MEIC evaluation of acute systemic toxicity. Part V. Rodent and human toxicity data for the 50 reference chemicals. ATLA 26, Suppl. 2, 569–615.

Ekwall, B., Barile., F.A., Castano, A., Clemedson, C., Clothier, R.H., Dierickx, P., Ekwall, B., Ferro, M., Fiskesjo;, G., Garza-Ocanas, L., Gomez-Lechon, M-J., Gulden, M., Hall, T., Isomaa, B., Kahru, A, Kerszman, G., Kristen, U., Kunimoto, M., Karenlampi, S., Lewan, L, Loukianov, A., Ohno, T., Persoone, G., Romert, L., Sawyer, T.W., Segner, H., Shrivastava, R., Stammati, A., Tanaka, N., Valentino, M., Walum, E., and Zucco, F. (1998) MEIC evaluation of acute systemic toxicity. Part VI. Prediction of human toxicity by rodent LD50 values and results from 61 *in vitro* tests. ATLA 26, Suppl. 2, 617–658.

Ekwall, B., Clemedson, C., Ekwall, B., Ring, P., and Romert, L. (1999) EDIT: A new international multicentre programme to develop and evaluate batteries of *in vitro* tests for acute and chronic systemic toxicity. ATLA 27, 339–349.

Ekwall, B., Ekwall, B., and Sjostrom, M. (2000) MEIC evaluation of acute systemic toxicity: Part VIII. Multivariate partial least squares evaluation, including the selection of a battery cell line tests with a good prediction of human acute lethal peak blood concentrations for 50 chemicals. ATLA 28, Suppl. 1, 201–234.

Hellberg, S., Bondesson, I., Ekwall, B., Gomez-Lechon, M.J., Jover, R., Hogberg, J., Ponsoda, X., Romert, L., Stenberg, K., and Walum, E. (1990) Multivariate validation of cell toxicity data: The first ten MEIC chemicals. ATLA, 17, 237–238.

Hellberg, S., Eriksson, L., Jonsson, J., Lindgren, F., Sjostrom, M., Wold, S., Ekwall, B., Gomez-Lechon, J.M., Clothier, R., Accomando, N.J., Gimes, G., Barile, F.A., Nordin, M., Tyson, C.A., Dierickx, P., Shrivastava, R.S., Tingsleff-Skaanild, M., Garza-Ocanas, L., and Fiskesjo;, G. (1990) Analogy models for prediction of human toxicity. ATLA, 18, 103–116.

Shrivastava, R., Delomenie, C., Chevalier, A., John, G., Ekwall, B., Walum, E., and Massingham, R. (1992) Comparison of *in vivo* acute lethal potency and *in vitro* cytotoxicity of 48 chemicals. Cell Biol. Toxicol., 8(2), 157–170.

Spielmann, H., Genschow, E., Liebsch, M., and Halle, W. (1999) Determination of the starting dose for acute oral toxicity (LD50) testing in the up and down procedure (UDP) from cytotoxicity data. ATLA, 27(6), 957–966.

Walum, E, Nilsson, M, Clemedson, C. and Ekwall, B. (1995) The MEIC program and its implications for the prediction of acute human systemic toxicity, pp 275–282 In Proceedings of the World Congress on Alternatives and Animal Use in the Life Sciences: Education, Research, Testing. Alternative Methods in Toxicology and the Life Sciences, Vol. 11. Mary Ann Liebert, New York, 1995.

Dated: June 6, 2000.

**Samuel H. Wilson,**

*Deputy Director, National Institute of Environmental Health Sciences.*

[FR Doc. 00–14968 Filed 6–13–00; 8:45 am]

BILLING CODE 4140–01–P

## DEPARTMENT OF HOUSING AND URBAN DEVELOPMENT

**[Docket No. FR–4564–N–03]**

## Notice of Proposed Information Collection: Lead Hazard Control Grant Program Data Collection—Progress Reporting

**AGENCY:** Office of Lead Hazard Control.

**ACTION:** Notice.

**SUMMARY:** The revised information collection requirement described below will be submitted to the Office of Management and Budget (OMB) for review, as required by the Paperwork Reduction Act. The Department is soliciting public comments on the subject proposal.

**DATES:** Comments Due Date: August 14, 2000.

**ADDRESSES:** Interested persons are invited to submit comments regarding this proposal. Comments should refer to the proposal by name and/or OMB Control Number and should be sent to: Gail Ward, Reports Liaison Officer, Department of Housing and Urban Development, 451 7th Street, SW, Room P–3206, Washington, DC 20410.

**FOR FURTHER INFORMATION CONTACT:** Matthew Ammon at (202) 755–1785, ext. 158 (this is not a toll-free number) for copies of the proposed forms and other available documents.

**SUPPLEMENTARY INFORMATION:** The Department is submitting the revised information collection to OMB for review, as required by the Paperwork Reduction Act of 1995 (44 U.S.C. Chapter 35, as amended).

This Notice is soliciting comments from members of the public and affected agencies concerning the proposed collection of information to: (1) Evaluate whether the revised collection of information is necessary for the proper performance of the functions of the agency, including whether the

# Appendix P

## *In Vitro* Cytotoxicity Test Methods and the High Production Volume (HPV) Challenge Program

**P1 Supplemental Acute Toxicity Protocol ..... P-3**

**P2 Office of Pollution Prevention and Toxics (OPPT) Letters to Manufacturers/Importers ..... P-9**

***[This Page Intentionally Left Blank]***

# Appendix P1

## Supplemental Acute Toxicity Protocol

***[This Page Intentionally Left Blank]***

**U.S. EPA/OPPTS/OPPT/High Production Volume (HPV) Challenge Program**

**[NOTE:** This statement was extracted from the EPA web site. The original can be visited at: http://www.epa.gov/chemrtk/toxprtcl.htm]

***Supplemental Acute Toxicity Protocol***

The EPA, along with the National Toxicology Program and the National Institute of Environmental Health Sciences (NIEHS), sponsored an International Workshop on *In Vitro* Methods held on October 17-20, 2000, to review the validation status of available *in vitro* methods for predicting acute oral toxicity, among other goals.

The October 2000 Workshop concluded that *in vitro* cytotoxicity data could be useful in estimating starting doses for *in vivo* acute toxicity testing, and in this way could also reduce the number of animals used in subsequent *in vivo* tests. The two candidate cytotoxicity tests recommended for use with the regression model for estimating starting doses from *in vitro* cytotoxicity data are neutral red uptake assays using BALB/c 3T3 mouse fibroblasts and normal human keratinocytes. Other cell lines/cells could also be used with the regression model to estimate starting doses, but first the correlation between the *in vitro* test and the *in vivo* test must be established quantitatively. Guidance on these *in vitro* tests, protocols for use of recommended tests, and a reporting template for results of *in vitro* tests are all contained in the **ICCVAM Guidance Document** (2001), which is one of the products of the October Workshop. Further background on the October workshop can be found in the **ICCVAM Workshop Report** (2001).

While the formal request to EPA from NIH that would ask the Agency to accept or reject these protocols has not yet been received (nor have these methods been incorporated in OECD or the EPA acute toxicity test guidelines), the findings of this workshop included a recommendation to all Agencies participating in ICCVAM to consider the use of these *in vitro* cytotoxicity tests as supplements to the current acute oral *in vivo* acute toxicity protocols. These *in vitro* cytotoxicity protocols were recognized earlier in Steven Johnson's letter of October 30, 2001. The *in vitro* tests are supplements to, not replacements for, the

OECD acute toxicity test guideline 425 (known as the Up-and-Down Procedure) which is currently recommended for use in the HPV Challenge Program. The new *in vitro* tests are intended to better estimate the starting doses for new *in vivo* acute oral toxicity studies conducted under the HPV Challenge.

We encourage those participating in the HPV Challenge Program to consider using the recommended *in vitro* tests noted here as a supplemental component in conducting any new *in vivo* acute oral toxicity studies under the HPV Challenge Program, to note the intention to use these protocols in HPV Challenge test plans submitted to EPA, and to summarize the results using the recommended reporting template. This information on the *in vitro* template should accompany results from the *in vivo* acute oral tests, and be provided to EPA as part of the HPV Challenge Program. The October workshop documents and the recommended reporting template for the *in vitro* tests can be found below. The ICCVAM website - *In Vitro* methods page - should be consulted for any future updates to the *in vitro* guidance methodologies prior to proceeding with testing.

In order to gain more familiarity with these methods, technical experts from industry and other organizations were invited to a workshop sponsored by EPA, NIEHS, and others on these *in vitro* methods. The workshop was held February 19-21, 2001 (see the ICCVAM website at http://iccvam.niehs.nih.gov/meetings/schedule.htm for more details).

**ICCVAM (Interagency Coordinating Committee on the Validation of Alternative Methods)**
**Report of the International Workshop on *In Vitro* Methods for Assessing Acute Systemic Toxicity.** 2001. NIH Publication No. 01-4499. National Institute of Environmental Health Sciences (NIEHS)

**ICCVAM (Interagency Coordinating Committee on the Validation of Alternative Methods)**

**Guidance Document on Using *In Vitro* Data to Estimate *In Vivo* Starting Doses for Acute Toxicity.** 2001. NIH Publication No. 01-4500. National Institute of Environmental Health Sciences (NIEHS)

**Standard Test Reporting Template**

Any updates to this methodology can be found under ***In Vitro* Methods on the Interagency Coordinating Committee on the Validation of Alternative Methods (ICCVAM) web site.**

**----------**

Last updated on September 16, 2002

Visit the ICCVAM Home Page

***[This Page Intentionally Left Blank]***

# Appendix P2

## Office of Pollution Prevention and Toxics (OPPT)
## Letters to Manufacturers/Importers

***[This Page Intentionally Left Blank]***

United States Environmental Protection Agency

Office of Pollution Prevention And Toxics

Letters to Manufacturers/Importers

[High Production Volume Voluntary Challenge Program]

October 14, 1999
Company name
Street #
City, State, Zip

Dear Company Contact:

On behalf of the Environmental Protection Agency (EPA), I would like to thank you for your commitment to participate in the voluntary High Production Volume Challenge (HPV) program. We look forward to working with you over the coming years as we achieve our goals for this important program.

As you may be aware, a number of animal protection organizations and the public have raised concerns that the HPV Challenge program may lead to the excessive use of animals in tests and to inadequate attention to existing information and alternative testing methods that do not require animals as test subjects. As a general matter, animal experiments should not be performed if another validated method -- not involving the use of animals -- is reasonably and practically available for use in the HPV Challenge program. To respond to these concerns, and after consultation with the organizations involved in developing the framework for this initiative, I am asking you and your fellow HPV Challenge participants to observe the following principles as we proceed with the program:

1. In analyzing the adequacy of existing data, participants shall conduct a thoughtful, qualitative analysis rather than use a rote checklist approach. Participants may conclude that there is sufficient data, given the totality of what is known about a chemical, including human experience, that certain endpoints need not be tested.

2. Participants shall maximize the use of existing and scientifically adequate data to minimize further testing. To reinforce this approach, EPA will consider information contained in the databases identified in the enclosure, or in databases maintained by the organizations identified in the enclosure, to have been known to the Agency within the meaning of Section 8(e) of the Toxic Substances Control Act (TSCA), 42 U.S.C. 2607(e). This policy is limited to information reported by participants under the HPV Challenge program and generated for or contained in these databases as of the date of this letter. In addition, any other potential liability under TSCA Section 8(e) for existing data on HPV Challenge program chemicals will be limited according to the terms of the "Registration

Agreement for TSCA Section 8(e) Compliance Audit Program (56 Fed. Reg. 4128, Feb. 1, 1991)." This policy does not affect prior 8(e) enforcement actions.

3. Participants shall maximize the use of scientifically appropriate categories of related chemicals and structure activity relationships.

4. Consistent with the Screening Information Data Set (SIDS) program of the Organization for Economic Cooperation and Development (OECD), participants shall not conduct any terrestrial toxicity testing.

5. Participants are encouraged to use in vitro genetic toxicity testing to generate any needed genetic toxicity screening data, unless known chemical properties preclude its use.

6. Consistent with the OECD/SIDS program, participants generally should not develop any new dermal toxicity data.

7. Participants shall not develop sub-chronic or reproductive toxicity data for the HPV chemicals that are solely closed system intermediates, as defined by the OECD/SIDS guidelines.

8. In analyzing the adequacy of screening data for chemicals that are substances Generally Recognized as Safe (GRAS) for a particular use by the Food and Drug Administration (FDA), participants should consider all relevant and available information supporting the FDA's conclusions. Participants reviewing the adequacy of existing data for these chemicals should specifically consider whether the information available makes it unnecessary to proceed with further testing involving animals. As with all chemicals, before generating new information, participants should further consider whether any additional information obtained would be useful or relevant.

9. Because validated non-animal tests for some SIDS endpoints may be available soon, participants shall make the following revisions to the sequence of testing:

(a) Testing of closed system intermediates, which present less risk of exposure, shall be deferred until 2003;

(b) Individual chemicals (i.e., those HPV chemicals not proposed for testing in a category) that require further testing on animals shall be deferred until November 2001.

These revisions should not be construed to suggest that delay or deferral is appropriate with respect to testing of scientifically appropriate categories of related chemicals.

10. Companies shall allow 120 days between the posting of test plans and the implementation of any testing plans.

To promote the availability and use of alternatives to tests involving animals, the National Institute of Environmental Health Sciences (NIEHS) and the National Toxicology Program

(NTP) will commit at least $1.5 million in FY 2000, and $3 Million in FY 2001, and any further funds appropriated by Congress, to the development and validation of non-animal alternative test methods and protocols. EPA will provide an additional $250,000 this year and will seek to provide a similar amount next year to these efforts. The Multicenter Evaluation of In Vitro Cytotoxicity (MEIC), on the agenda for the October 14 meeting of NTP's Advisory Committee on Alternative Toxicological Methods, will be given priority attention. EPA will promptly incorporate, as appropriate, the work of NIEHS and NTP into the HPV Challenge program.

EPA recognizes that the HPV Challenge is a voluntary program that includes substantial public review and involvement. The successful implementation of the changes described in this letter will depend upon the good faith effort and cooperation of all parties. We appreciate the spirit of cooperation and commitment that has characterized this initiative to date. The changes to the HPV Challenge program outlined above present the opportunity to advance our shared goals of expanding the basic health data available to the public, while incorporating certain animal welfare concerns and scientific principles. It is the intention of the Agency that the HPV Challenge program, including the test rule(s), should proceed in a manner that is consistent with these principles and concerns.

Again, I thank you for your commitment to participate in the HPV Challenge program. If you need further clarification or assistance with this program, please contact Barbara Leczynski at 202-260-3749 or visit the website at www.epa.gov/chemrtk.

Sincerely,
/s/
Susan H. Wayland
Deputy Assistant Administrator

Enclosure

ENCLOSURE A

The IUCLID database administered by the European Union's Existing Chemicals Bureau
Aquatic Information Retrieval (AQUIRE)
Catalog of Teratogenic Agents (CTA)
Chemical Carcinogenesis Research Information System (CCRIS)
Chemical Information System (CIS)
The ChemID database of the National Library of Medicine (NLM)
Datalog
Developmental and Reproductive Technology (DART)
Envirofate Environmental Mutagen Information Center (EMIC)
Environmental Teratology Information Center (ETIC/ETICBACK)
GENE-TOX
Hazardous Substances Data Bank (HSDB)
Integrated Risk Management System (IRIS)
Merck Index National Institute for Occupational Safety and Health (NIOSH)
National Library of Medicine TOXLINE and TOXNET
National Toxicology Program (NTP) Testing Information and Study Results
NTP Technical Reports
NTP Chemical Health and Safety Data
Phytotox Registry of Toxic Effects of Chemical Substances
Structure and Nomenclature Search System (SANSS)
Toxics Substances Control Act Test Submissions (TSCATS)
WHO/IPCS Documents (CICADS and Environmental Health Criteria Documents) BIODEG
BIOLOG
CANCERLIT
CHEMFATE
CHRIS
FIFRA Database/MRID
IRAC Documents
MEDLINE
National Cancer Institute Journal
POISINDEX
Shepard's Catalog
STN (Chemical Abstracts Service)

**Document Source: http://www.epa.gov/opptintr/chemrtk/ceoltr.htm**

# Appendix Q

## Additional UDP Simulation Modeling Results

**Q1 UDP Simulation Results for the RC Rat-Only Millimole Regression Starting at the $LD_{50}$ Predicted by the 3T3 and NHK NRU $IC_{50}$ - 5000 mg/kg Upper Limit Dose ..... Q-3**

**Q2 UDP Simulation Results for the RC Rat-Only Weight Regression Starting at the $LD_{50}$ Predicted by the 3T3 and NHK NRU $IC_{50}$ - 5000 mg/kg Upper Limit Dose ..... Q-13**

***[This Page Intentionally Left Blank]***

# Appendix Q1

## UDP Simulation Results for the RC Rat-Only Millimole Regression Starting at the $LD_{50}$ Predicted by the 3T3 and NHK NRU $IC_{50}$ - 5000 mg/kg Upper Limit Dose

***[This Page Intentionally Left Blank]***

## Summary of Animals Used and Animals Dead for UDP Simulations by NRU Test Method[1]

| NRU Test Method | Sigma | Starting Dose | Animals Used | | | | Animals Died | | | | % Savings - Animals Used | % Difference - Animals Died |
|---|---|---|---|---|---|---|---|---|---|---|---|---|
| | | | Std. Error | Number[2] | Difference[3] | P[4] | Std. Error | Number[2] | Difference[3] | P[4] | | |
| 3T3 | 0.12 | Cyto | 0.2099 | 7.35 | 0.63 | 0.0017 | 0.2270 | 3.62 | -0.16 | 0.1577 | 7.9% | -4.7% |
| | | Default | 0.1750 | 7.97 | | | 0.1999 | 3.45 | | | | |
| | 0.25 | Cyto | 0.2053 | 8.06 | 0.63 | 0.0036 | 0.2257 | 3.97 | -0.19 | 0.1615 | 7.2% | -4.9% |
| | | Default | 0.1746 | 8.69 | | | 0.1955 | 3.78 | | | | |
| | 0.50 | Cyto | 0.1904 | 8.72 | 0.63 | 0.0044 | 0.2166 | 4.31 | -0.19 | 0.2406 | 6.8% | -4.6% |
| | | Default | 0.1614 | 9.35 | | | 0.1821 | 4.12 | | | | |
| | 1.25 | Cyto | 0.1649 | 9.27 | 0.67 | 0.0022 | 0.1917 | 4.67 | -0.12 | 0.8288 | 6.7% | -2.7% |
| | | Default | 0.1310 | 9.94 | | | 0.1491 | 4.55 | | | | |
| | 2.00 | Cyto | 0.1421 | 9.41 | 0.60 | 0.0011 | 0.1678 | 4.76 | -0.08 | 0.8530 | 6.0% | -1.8% |
| | | Default | 0.0956 | 10.02 | | | 0.1265 | 4.68 | | | | |
| | | | Average Difference | | 0.63 | | Average Difference | | -0.15 | | | |
| NHK | 0.12 | Cyto | 0.2225 | 7.44 | 0.50 | 0.0060 | 0.2357 | 3.58 | -0.18 | 0.1299 | 6.3% | -5.3% |
| | | Default | 0.1741 | 7.94 | | | 0.2023 | 3.40 | | | | |
| | 0.25 | Cyto | 0.2124 | 8.12 | 0.54 | 0.0050 | 0.2317 | 3.91 | -0.19 | 0.1848 | 6.3% | -5.0% |
| | | Default | 0.1697 | 8.67 | | | 0.1967 | 3.73 | | | | |
| | 0.50 | Cyto | 0.1919 | 8.79 | 0.56 | 0.0045 | 0.2191 | 4.28 | -0.20 | 0.1974 | 5.9% | -4.9% |
| | | Default | 0.1543 | 9.35 | | | 0.1812 | 4.08 | | | | |
| | 1.25 | Cyto | 0.1633 | 9.34 | 0.62 | 0.0010 | 0.1931 | 4.66 | -0.13 | 0.7671 | 6.2% | -2.8% |
| | | Default | 0.1241 | 9.96 | | | 0.1478 | 4.53 | | | | |
| | 2.00 | Cyto | 0.1405 | 9.47 | 0.56 | 0.0005 | 0.1696 | 4.75 | -0.09 | 0.7533 | 5.6% | -1.9% |
| | | Default | 0.0921 | 10.03 | | | 0.1249 | 4.66 | | | | |
| | | | Average Difference | | 0.56 | | Average Difference | | -0.16 | | | |

Abbreviations: UDP=Up-and-Down Procedure (OECD 2001a, EPA 2002a); NRU=Neutral red uptake; Sigma=Reciprocal of dose-mortality slope; Cyto=NRU-determined starting dose (i.e., $LD_{50}$ predicted by the NRU $IC_{50}$ in the RC rat-only millimole regression (log $LD_{50}$ [mmol/kg] = 0.439 log $IC_{50}$ [mM] + 0.621); Default=Default starting dose of 175 mg/kg; Std. Error=Standard error for number of animals; 3T3= BALB/c 3T3 mouse fibroblasts; NHK=Normal human epidermal keratinocytes; RC=Registry of Cytotoxicity.

[1]For 10,000 UDP simulations at each starting dose and dose-mortality slope for 67 substances in the 3T3 NRU test method and 68 substances in the NHK NRU test method. Upper limit dose =5000 mg/kg.

[2]Mean number of animals for 10,000 simulations.

[3]Difference between mean number of animals used for the default starting dose and mean number of animals used for the NRU-based starting dose.

[4]P-value is from one-sided Wilcoxon signed rank test for difference in animals between the default and NRU-based starting doses. Significant values at $p < 0.05$.

## Summary of Stopping Rules Used for the UDP Simulations by NRU Test Method[1]

| NRU Test Method | Sigma | Starting Dose | 3 Animals at Limit Dose[2] | 5 Reversals[2] | Likelihood Ratio[2] | Maximum Number of Animals Used[2] |
|---|---|---|---|---|---|---|
| 3T3 | 0.12 | Cyto | 15.8% | 58.7% | 24.3% | 1.1% |
| | | Default | 15.4% | 57.3% | 24.9% | 2.4% |
| | 0.25 | Cyto | 15.2% | 33.9% | 48.3% | 2.7% |
| | | Default | 14.6% | 34.3% | 45.9% | 5.2% |
| | 0.5 | Cyto | 13.8% | 19.7% | 60.4% | 6.1% |
| | | Default | 13.0% | 20.0% | 57.5% | 9.6% |
| | 1.25 | Cyto | 10.5% | 13.2% | 64.7% | 11.6% |
| | | Default | 9.1% | 13.6% | 60.9% | 16.3% |
| | 2 | Cyto | 9.4% | 12.1% | 65.4% | 13.2% |
| | | Default | 7.4% | 12.5% | 62.5% | 17.6% |
| NHK | 0.12 | Cyto | 17.0% | 54.8% | 26.7% | 1.5% |
| | | Default | 16.6% | 56.3% | 24.8% | 2.3% |
| | 0.25 | Cyto | 16.3% | 32.7% | 48.0% | 3.0% |
| | | Default | 15.8% | 33.7% | 45.5% | 5.1% |
| | 0.5 | Cyto | 14.4% | 19.3% | 59.6% | 6.6% |
| | | Default | 13.8% | 19.9% | 56.9% | 9.5% |
| | 1.25 | Cyto | 10.5% | 13.3% | 64.2% | 11.9% |
| | | Default | 9.5% | 13.5% | 60.5% | 16.4% |
| | 2 | Cyto | 9.2% | 12.0% | 65.2% | 13.6% |
| | | Default | 7.6% | 12.5% | 62.1% | 17.7% |

Abbreviations: UDP=Up-and-Down Procedure (OECD 2001a, EPA 2002a); NRU=Neutral red uptake; Sigma=Reciprocal of dose-mortality slope; Cyto=NRU-determined starting dose (i.e., the $LD_{50}$ predicted by the NRU $IC_{50}$ in the RC rat-only millimole regression (log $LD_{50}$ [mmol/kg] = 0.439 log $IC_{50}$ [mM] + 0.621); Default=Default starting dose of 175 mg/kg; 3T3= BALB/c 3T3 mouse fibroblasts; NHK=Normal human epidermal keratinocytes; RC=Registry of Cytotoxicity.

[1]For 10,000 UDP simulations at each starting dose and dose-mortality slope for 67 substances in the 3T3 NRU test method and 68 substances in the NHK NRU test method. Upper limit dose =5000 mg/kg.

[2]Percentage of the 10,000 test simulations that satisfied the specified condition for completion of testing (see OECD [2001a]; EPA [2002a]).

## Summary of Animals Used and Animals Dead for UDP Simulations by GHS Toxicity Category and NRU Test Method[1]

| Toxcat | NRU Test Method | Sigma | Starting Dose | Animals Used | | | | Animals Died | | | | % Savings - Animals Used | % Difference - Animals Died |
|---|---|---|---|---|---|---|---|---|---|---|---|---|---|
| | | | | Std. Error | Number[2] | Difference[3] | P[4] | Std. Error | Number[2] | Difference[3] | P[4] | | |
| 1 | 3T3 | 0.12 | Cyto | 0.650 | 9.65 | 0.01 | 0.8750 | 0.586 | 6.31 | 0.06 | 0.8750 | 0.1% | 1.0% |
| | | | Default | 0.273 | 9.65 | | | 0.170 | 6.37 | | | | |
| | | 0.25 | Cyto | 0.642 | 10.24 | 0.23 | 0.6250 | 0.579 | 6.69 | 0.15 | 0.8750 | 2.2% | 2.2% |
| | | | Default | 0.192 | 10.47 | | | 0.162 | 6.84 | | | | |
| | | 0.50 | Cyto | 0.646 | 10.87 | 0.35 | 0.6250 | 0.596 | 7.14 | 0.18 | 0.6250 | 3.1% | 2.4% |
| | | | Default | 0.201 | 11.22 | | | 0.198 | 7.31 | | | | |
| | | 1.25 | Cyto | 0.624 | 11.27 | 0.40 | 0.6250 | 0.587 | 7.30 | 0.22 | 0.6250 | 3.4% | 2.9% |
| | | | Default | 0.141 | 11.67 | | | 0.161 | 7.52 | | | | |
| | | 2.00 | Cyto | 0.563 | 11.16 | 0.25 | 0.6250 | 0.532 | 7.05 | 0.17 | 0.6250 | 2.2% | 2.3% |
| | | | Default | 0.123 | 11.41 | | | 0.140 | 7.21 | | | | |
| | | | | Average Difference | | 0.25 | | Average Difference | | 0.15 | | | |
| | NHK | 0.12 | Cyto | 0.815 | 9.91 | -0.30 | 0.8750 | 0.682 | 6.46 | -0.11 | 1.0000 | -3.1% | -1.7% |
| | | | Default | 0.292 | 9.61 | | | 0.178 | 6.35 | | | | |
| | | 0.25 | Cyto | 0.693 | 10.44 | -0.05 | 1.0000 | 0.603 | 6.84 | -0.03 | 1.0000 | -0.5% | -0.4% |
| | | | Default | 0.267 | 10.39 | | | 0.195 | 6.81 | | | | |
| | | 0.50 | Cyto | 0.629 | 11.05 | 0.09 | 0.8750 | 0.578 | 7.28 | 0.00 | 1.0000 | 0.8% | 0.0% |
| | | | Default | 0.257 | 11.14 | | | 0.232 | 7.28 | | | | |
| | | 1.25 | Cyto | 0.583 | 11.43 | 0.22 | 0.8750 | 0.565 | 7.44 | 0.09 | 0.8750 | 1.9% | 1.1% |
| | | | Default | 0.176 | 11.65 | | | 0.188 | 7.53 | | | | |
| | | 2.00 | Cyto | 0.561 | 11.26 | 0.15 | 0.8750 | 0.532 | 7.15 | 0.05 | 0.8750 | 1.3% | 0.7% |
| | | | Default | 0.155 | 11.40 | | | 0.153 | 7.20 | | | | |
| | | | | Average Difference | | 0.02 | | Average Difference | | 0.00 | | | |
| 2 | 3T3 | 0.12 | Cyto | 0.433 | 9.04 | -0.60 | 0.1272 | 0.417 | 5.64 | -0.53 | 0.0942 | -7.1% | -10.4% |
| | | | Default | 0.284 | 8.44 | | | 0.241 | 5.11 | | | | |
| | | 0.25 | Cyto | 0.460 | 9.66 | -0.68 | 0.1099 | 0.428 | 5.99 | -0.56 | 0.1099 | -7.6% | -10.4% |
| | | | Default | 0.208 | 8.98 | | | 0.201 | 5.43 | | | | |
| | | 0.50 | Cyto | 0.491 | 10.24 | -0.71 | 0.1272 | 0.447 | 6.31 | -0.61 | 0.0942 | -7.4% | -10.6% |
| | | | Default | 0.227 | 9.53 | | | 0.209 | 5.71 | | | | |
| | | 1.25 | Cyto | 0.449 | 10.71 | -0.65 | 0.0942 | 0.425 | 6.52 | -0.61 | 0.0942 | -6.5% | -10.2% |
| | | | Default | 0.236 | 10.06 | | | 0.216 | 5.92 | | | | |
| | | 2.00 | Cyto | 0.364 | 10.70 | -0.58 | 0.0942 | 0.361 | 6.41 | -0.53 | 0.1099 | -5.7% | -9.1% |
| | | | Default | 0.178 | 10.12 | | | 0.177 | 5.87 | | | | |
| | | | | Average Difference | | -0.64 | | Average Difference | | -0.67 | | | |
| | NHK | 0.12 | Cyto | 0.494 | 9.17 | -0.76 | 0.0942 | 0.486 | 5.66 | -0.57 | 0.1677 | -9.1% | -11.1% |
| | | | Default | 0.263 | 8.41 | | | 0.231 | 5.09 | | | | |
| | | 0.25 | Cyto | 0.473 | 9.79 | -0.83 | 0.0803 | 0.478 | 6.02 | -0.60 | 0.0942 | -9.2% | -11.1% |
| | | | Default | 0.160 | 8.96 | | | 0.183 | 5.41 | | | | |
| | | 0.50 | Cyto | 0.498 | 10.33 | -0.81 | 0.0942 | 0.495 | 6.33 | -0.63 | 0.0942 | -8.5% | -11.1% |
| | | | Default | 0.153 | 9.52 | | | 0.179 | 5.70 | | | | |
| | | 1.25 | Cyto | 0.471 | 10.77 | -0.71 | 0.0803 | 0.480 | 6.53 | -0.62 | 0.0681 | -7.0% | -10.4% |
| | | | Default | 0.179 | 10.07 | | | 0.192 | 5.91 | | | | |
| | | 2.00 | Cyto | 0.392 | 10.77 | -0.63 | 0.0574 | 0.417 | 6.42 | -0.55 | 0.0803 | -6.2% | -9.4% |
| | | | Default | 0.147 | 10.14 | | | 0.164 | 5.87 | | | | |
| | | | | Average Difference | | -0.75 | | Average Difference | | -0.59 | | | |

## Summary of Animals Used and Animals Dead for UDP Simulations by GHS Toxicity Category and NRU Test Method[1]

| Toxcat | NRU Test Method | Sigma | Starting Dose | Animals Used | | | | Animals Died | | | | % Savings - Animals Used | % Difference - Animals Died |
|---|---|---|---|---|---|---|---|---|---|---|---|---|---|
| | | | | Std. Error | Number[2] | Difference[3] | P[4] | Std. Error | Number[2] | Difference[3] | P[4] | | |
| 3 | 3T3 | 0.12 | Cyto | 0.255 | 7.32 | -0.61 | 0.0522 | 0.213 | 4.02 | -0.60 | 0.0161 | -9.1% | -17.5% |
| | | | Default | 0.212 | 6.71 | | | 0.133 | 3.42 | | | | |
| | | 0.25 | Cyto | 0.269 | 8.07 | -0.78 | 0.0093 | 0.221 | 4.42 | -0.66 | 0.0068 | -10.8% | -17.4% |
| | | | Default | 0.138 | 7.28 | | | 0.094 | 3.76 | | | | |
| | | 0.50 | Cyto | 0.274 | 8.71 | -0.94 | 0.0093 | 0.220 | 4.75 | -0.70 | 0.0068 | -12.2% | -17.3% |
| | | | Default | 0.094 | 7.76 | | | 0.077 | 4.05 | | | | |
| | | 1.25 | Cyto | 0.193 | 9.35 | -0.79 | 0.0049 | 0.170 | 5.04 | -0.58 | 0.0068 | -9.2% | -13.1% |
| | | | Default | 0.059 | 8.56 | | | 0.056 | 4.45 | | | | |
| | | 2.00 | Cyto | 0.120 | 9.54 | -0.48 | 0.0068 | 0.128 | 5.10 | -0.42 | 0.0122 | -5.3% | -8.9% |
| | | | Default | 0.038 | 9.07 | | | 0.047 | 4.69 | | | | |
| | | | | Average Difference | | -0.72 | | Average Difference | | -0.59 | | | |
| | NHK | 0.12 | Cyto | 0.258 | 7.11 | -0.44 | 0.0923 | 0.196 | 3.80 | -0.40 | 0.0269 | -6.6% | -11.8% |
| | | | Default | 0.222 | 6.67 | | | 0.139 | 3.40 | | | | |
| | | 0.25 | Cyto | 0.297 | 7.78 | -0.56 | 0.0269 | 0.222 | 4.17 | -0.44 | 0.0640 | -7.7% | -11.8% |
| | | | Default | 0.173 | 7.23 | | | 0.112 | 3.73 | | | | |
| | | 0.50 | Cyto | 0.271 | 8.45 | -0.68 | 0.0269 | 0.210 | 4.51 | -0.47 | 0.1294 | -8.8% | -11.7% |
| | | | Default | 0.107 | 7.77 | | | 0.083 | 4.04 | | | | |
| | | 1.25 | Cyto | 0.168 | 9.13 | -0.52 | 0.0093 | 0.154 | 4.83 | -0.36 | 0.0923 | -6.0% | -8.1% |
| | | | Default | 0.061 | 8.61 | | | 0.059 | 4.47 | | | | |
| | | 2.00 | Cyto | 0.104 | 9.42 | -0.33 | 0.0425 | 0.118 | 4.95 | -0.26 | 0.0923 | -3.7% | -5.6% |
| | | | Default | 0.037 | 9.09 | | | 0.048 | 4.69 | | | | |
| | | | | Average Difference | | -0.51 | | Average Difference | | -0.39 | | | |
| 4 | 3T3 | 0.12 | Cyto | 0.156 | 6.76 | 0.78 | 0.0092 | 0.053 | 3.31 | 0.13 | 0.1754 | 10.3% | 3.9% |
| | | | Default | 0.259 | 7.54 | | | 0.078 | 3.45 | | | | |
| | | 0.25 | Cyto | 0.181 | 7.33 | 0.71 | 0.0089 | 0.050 | 3.58 | 0.09 | 0.0386 | 8.8% | 2.5% |
| | | | Default | 0.231 | 8.04 | | | 0.060 | 3.67 | | | | |
| | | 0.50 | Cyto | 0.197 | 7.85 | 0.79 | 0.0092 | 0.053 | 3.81 | 0.13 | 0.0443 | 9.2% | 3.2% |
| | | | Default | 0.237 | 8.64 | | | 0.059 | 3.93 | | | | |
| | | 1.25 | Cyto | 0.162 | 8.61 | 0.63 | 0.0092 | 0.051 | 4.17 | 0.02 | 0.1754 | 6.8% | 0.5% |
| | | | Default | 0.154 | 9.24 | | | 0.022 | 4.19 | | | | |
| | | 2.00 | Cyto | 0.121 | 9.01 | 0.43 | 0.0052 | 0.045 | 4.35 | -0.06 | 0.0577 | 4.6% | -1.4% |
| | | | Default | 0.089 | 9.44 | | | 0.018 | 4.29 | | | | |
| | | | | Average Difference | | 0.67 | | Average Difference | | 0.06 | | | |
| | NHK | 0.12 | Cyto | 0.202 | 6.95 | 0.59 | 0.0833 | 0.092 | 3.43 | 0.02 | 0.4637 | 7.8% | 0.5% |
| | | | Default | 0.257 | 7.54 | | | 0.077 | 3.45 | | | | |
| | | 0.25 | Cyto | 0.208 | 7.44 | 0.63 | 0.0386 | 0.087 | 3.66 | 0.03 | 0.0739 | 7.8% | 0.8% |
| | | | Default | 0.219 | 8.07 | | | 0.057 | 3.69 | | | | |
| | | 0.50 | Cyto | 0.221 | 7.93 | 0.72 | 0.0290 | 0.087 | 3.88 | 0.06 | 0.1167 | 8.4% | 1.5% |
| | | | Default | 0.233 | 8.66 | | | 0.059 | 3.94 | | | | |
| | | 1.25 | Cyto | 0.188 | 8.68 | 0.57 | 0.0290 | 0.073 | 4.23 | -0.04 | 0.3755 | 6.1% | -0.9% |
| | | | Default | 0.150 | 9.24 | | | 0.022 | 4.19 | | | | |
| | | 2.00 | Cyto | 0.136 | 9.04 | 0.41 | 0.0155 | 0.056 | 4.39 | -0.10 | 0.0443 | 4.3% | -2.4% |
| | | | Default | 0.090 | 9.45 | | | 0.017 | 4.29 | | | | |
| | | | | Average Difference | | 0.58 | | Average Difference | | -0.01 | | | |

## Summary of Animals Used and Animals Dead for UDP Simulations by GHS Toxicity Category and NRU Test Method[1]

| Toxcat | NRU Test Method | Sigma | Starting Dose | Animals Used | | | | Animals Died | | | | % Savings - Animals Used | % Difference - Animals Died |
|---|---|---|---|---|---|---|---|---|---|---|---|---|---|
| | | | | Std. Error | Number[2] | Difference[3] | P[4] | Std. Error | Number[2] | Difference[3] | P[4] | | |
| 5 | 3T3 | 0.12 | Cyto | 0.299 | 7.16 | 2.03 | 0.0020 | 0.035 | 3.18 | 0.14 | 0.0645 | 22.1% | 4.2% |
| | | | Default | 0.216 | 9.19 | | | 0.045 | 3.32 | | | | |
| | | 0.25 | Cyto | 0.233 | 8.10 | 2.29 | 0.0020 | 0.031 | 3.43 | 0.16 | 0.0645 | 22.1% | 4.6% |
| | | | Default | 0.141 | 10.39 | | | 0.075 | 3.59 | | | | |
| | | 0.50 | Cyto | 0.178 | 8.54 | 2.25 | 0.0020 | 0.050 | 3.53 | 0.14 | 0.0488 | 20.9% | 3.8% |
| | | | Default | 0.090 | 10.79 | | | 0.071 | 3.68 | | | | |
| | | 1.25 | Cyto | 0.141 | 8.60 | 2.15 | 0.0020 | 0.045 | 3.62 | 0.28 | 0.0020 | 20.0% | 7.3% |
| | | | Default | 0.062 | 10.75 | | | 0.034 | 3.91 | | | | |
| | | 2.00 | Cyto | 0.118 | 8.68 | 1.77 | 0.0020 | 0.040 | 3.74 | 0.26 | 0.0020 | 16.9% | 6.5% |
| | | | Default | 0.055 | 10.45 | | | 0.017 | 4.00 | | | | |
| | | | | Average Difference | | 2.10 | | Average Difference | | 0.20 | | | |
| | NHK | 0.12 | Cyto | 0.358 | 7.38 | 1.81 | 0.0020 | 0.058 | 3.22 | 0.10 | 0.3750 | 19.7% | 2.9% |
| | | | Default | 0.218 | 9.19 | | | 0.056 | 3.32 | | | | |
| | | 0.25 | Cyto | 0.314 | 8.26 | 2.12 | 0.0020 | 0.049 | 3.44 | 0.16 | 0.1934 | 20.5% | 4.4% |
| | | | Default | 0.111 | 10.38 | | | 0.081 | 3.60 | | | | |
| | | 0.50 | Cyto | 0.240 | 8.75 | 2.02 | 0.0020 | 0.041 | 3.57 | 0.10 | 0.3750 | 18.7% | 2.6% |
| | | | Default | 0.062 | 10.77 | | | 0.079 | 3.66 | | | | |
| | | 1.25 | Cyto | 0.156 | 8.81 | 1.91 | 0.0020 | 0.035 | 3.67 | 0.22 | 0.0020 | 17.9% | 5.7% |
| | | | Default | 0.049 | 10.72 | | | 0.041 | 3.89 | | | | |
| | | 2.00 | Cyto | 0.123 | 8.86 | 1.56 | 0.0020 | 0.036 | 3.79 | 0.20 | 0.0020 | 15.0% | 5.1% |
| | | | Default | 0.038 | 10.42 | | | 0.024 | 3.99 | | | | |
| | | | | Average Difference | | 1.89 | | Average Difference | | 0.15 | | | |
| 6 | 3T3 | 0.12 | Cyto | 0.561 | 5.71 | 2.03 | 0.0005 | 0.325 | 0.90 | -0.06 | 0.1294 | 26.2% | -6.6% |
| | | | Default | 0.576 | 7.74 | | | 0.300 | 0.85 | | | | |
| | | 0.25 | Cyto | 0.536 | 6.56 | 2.08 | 0.0005 | 0.326 | 1.37 | -0.08 | 0.0049 | 24.1% | -6.2% |
| | | | Default | 0.531 | 8.64 | | | 0.305 | 1.29 | | | | |
| | | 0.50 | Cyto | 0.399 | 7.65 | 2.19 | 0.0005 | 0.249 | 2.07 | -0.05 | 0.0640 | 22.2% | -2.4% |
| | | | Default | 0.337 | 9.84 | | | 0.254 | 2.02 | | | | |
| | | 1.25 | Cyto | 0.245 | 8.41 | 2.48 | 0.0005 | 0.120 | 2.97 | 0.23 | 0.0034 | 22.7% | 7.1% |
| | | | Default | 0.062 | 10.89 | | | 0.124 | 3.20 | | | | |
| | | 2.00 | Cyto | 0.196 | 8.45 | 2.34 | 0.0005 | 0.083 | 3.27 | 0.35 | 0.0005 | 21.7% | 9.6% |
| | | | Default | 0.022 | 10.78 | | | 0.070 | 3.62 | | | | |
| | | | | Average Difference | | 2.22 | | Average Difference | | 0.08 | | | |
| | NHK | 0.12 | Cyto | 0.561 | 5.87 | 1.76 | 0.0002 | 0.309 | 0.85 | -0.06 | 0.0500 | 23.0% | -8.0% |
| | | | Default | 0.548 | 7.63 | | | 0.285 | 0.79 | | | | |
| | | 0.25 | Cyto | 0.534 | 6.80 | 1.79 | 0.0002 | 0.317 | 1.36 | -0.11 | 0.0034 | 20.8% | -9.1% |
| | | | Default | 0.486 | 8.59 | | | 0.283 | 1.25 | | | | |
| | | 0.50 | Cyto | 0.392 | 7.95 | 1.88 | 0.0002 | 0.245 | 2.12 | -0.12 | 0.0024 | 19.1% | -5.9% |
| | | | Default | 0.309 | 9.83 | | | 0.233 | 2.00 | | | | |
| | | 1.25 | Cyto | 0.226 | 8.67 | 2.20 | 0.0002 | 0.116 | 3.04 | 0.14 | 0.0134 | 20.3% | 4.3% |
| | | | Default | 0.059 | 10.87 | | | 0.115 | 3.18 | | | | |
| | | 2.00 | Cyto | 0.180 | 8.67 | 2.11 | 0.0002 | 0.080 | 3.35 | 0.27 | 0.0002 | 19.6% | 7.5% |
| | | | Default | 0.021 | 10.78 | | | 0.064 | 3.62 | | | | |
| | | | | Average Difference | | 1.95 | | Average Difference | | 0.02 | | | |

Abbreviations: UDP=Up-and-Down Procedure (OECD 2001a, EPA 2002a); Toxcat=Category from Globally Harmonized System of Classification and Labeling of Chemicals[5] (GHS; UN 2005); NRU=Neutral red uptake; Sigma=Reciprocal of dose-mortality slope; Cyto=NRU-determined starting dose (i.e., the $LD_{50}$ predicted by the NRU $IC_{50}$ in the RC rat-only millimole regression (log $LD_{50}$ [mmol/kg] = 0.439 log $IC_{50}$ [mM] + 0.621); Default=Default starting dose of 175 mg/kg; Std. Error=Standard error for number of animals; 3T3= BALB/c 3T3 mouse fibroblasts; NHK=Normal human epidermal keratinocytes; RC=Registry of Cytotoxicity.

[1]For 10,000 UDP simulations at each starting dose and dose-mortality slope for 67 substances in the 3T3 NRU test method and 68 substances in the NHK NRU test method. Upper limit dose =5000 mg/kg.

[2]Mean number of animals for 10,000 simulations.

[3]Difference between mean animals used for the default starting dose and mean animals used for the NRU-based starting dose.

[4]P-value is from one-side Wilcoxon signed rank test for difference in animals between the default and NRU-based starting doses. Significant values at $p < 0.05$.

| [5]GHS Toxicity Category | Oral $LD_{50}$ Limits |
|---|---|
| 1 | $LD_{50} \leq 5$ mg/kg |
| 2 | $5 < LD_{50} \leq 50$ mg/kg |
| 3 | $50 < LD_{50} \leq 300$ mg/kg |
| 4 | $300 < LD_{50} \leq 2000$ mg/kg |
| 5 | $2000 < LD_{50} \leq 5000$ mg/kg |
| 6 | $LD_{50} > 5000$ mg/kg |

## Concordance of NRU-Based Starting Dose with Default Starting Dose for GHS Acute Oral Toxicity Category Outcome Based on Simulated UDP $LD_{50}$[1]

| GHS Category Based on $LD_{50}$ Outcome with Default Starting Dose | GHS Category Based on $LD_{50}$ Outcome with NHK NRU-Based Starting Dose | | | | | | | | | |
|---|---|---|---|---|---|---|---|---|---|---|
| | 1 | 2 | 3 | 4 | 5 | 6 | Total | Category Match | Higher NRU Category | Lower NRU Category |
| **1** | 4 | 0 | 0 | 0 | 0 | 0 | 4 | 100% | 0% | 0% |
| **2** | 0 | 13 | 0 | 0 | 0 | 0 | 13 | 100% | 0% | 0% |
| **3** | 0 | 1 | 11 | 0 | 0 | 0 | 12 | 92% | 0% | 8% |
| **4** | 0 | 0 | 1 | 15 | 1 | 0 | 17 | 88% | 6% | 6% |
| **5** | 0 | 0 | 0 | 0 | 22 | 0 | 22 | 100% | 0% | 0% |
| **6** | 0 | 0 | 0 | 0 | 0 | 0 | 0 | NA | 0% | NA |
| **Total** | 4 | 14 | 12 | 15 | 23 | 0 | 68 | 96% | 1% | 3% |

| GHS Category Based on $LD_{50}$ Outcome with Default Starting Dose | GHS Category Based on $LD_{50}$ Outcome with 3T3 NRU-Based Starting Dose | | | | | | | | | |
|---|---|---|---|---|---|---|---|---|---|---|
| | 1 | 2 | 3 | 4 | 5 | 6 | Total | Category Match | Higher NRU Category | Lower NRU Category |
| **1** | 4 | 0 | 0 | 0 | 0 | 0 | 4 | 100% | 0% | 0% |
| **2** | 0 | 13 | 0 | 0 | 0 | 0 | 13 | 100% | 0% | 0% |
| **3** | 0 | 1 | 11 | 0 | 0 | 0 | 12 | 92% | 0% | 8% |
| **4** | 0 | 0 | 0 | 16 | 1 | 0 | 17 | 94% | 6% | 0% |
| **5** | 0 | 0 | 0 | 0 | 21 | 0 | 21 | 100% | 0% | 0% |
| **6** | 0 | 0 | 0 | 0 | 0 | 0 | 0 | NA | 0% | NA |
| **Total** | 4 | 14 | 11 | 16 | 22 | 0 | 67 | 97% | 1% | 1% |

Abbreviations: NRU=Neutral red uptake; GHS=Globally Harmonized System of Classification and Labelling of Chemicals (UN 2005); UDP=Up-and-Down Procedure (OECD 2001a, EPA 2002a); 3T3= BALB/c 3T3 mouse fibroblasts; NHK=Normal human epidermal keratinocytes; NA=Not applicable; RC=Registry of Cytotoxicity.

[1]For 10,000 UDP simulations at each starting dose and dose-mortality slope for 67 substances in the 3T3 NRU test method and 68 substances in the NHK NRU test method. Upper limit dose =5000 mg/kg. The NRU-based starting dose was the $LD_{50}$ predicted by the NRU $IC_{50}$ in the RC rat-only millimole regression (log $LD_{50}$ [mmol/kg] = 0.439 log $IC_{50}$ [mM] + 0.621). The default starting dose = 175 mg/kg. Shaded cells are those containing the correct predictions.

| [2]GHS Toxicity Category | Oral $LD_{50}$ Limits |
|---|---|
| 1 | $LD_{50} \leq 5$ mg/kg |
| 2 | $5 < LD_{50} \leq 50$ mg/kg |
| 3 | $50 < LD_{50} \leq 300$ mg/kg |
| 4 | $300 < LD_{50} \leq 2000$ mg/kg |
| 5 | $2000 < LD_{50} \leq 5000$ mg/kg |
| 6 | $LD_{50} > 5000$ mg/kg |

## Discordant Substances for GHS Category Outcomes of UDP Simulations[1]

| NRU Test Method | Substance | NRU-Based Starting Dose[2] | | Default Starting Dose[3] | | $LD_{50}$ Difference |
|---|---|---|---|---|---|---|
| | | $LD_{50}$ | Toxcat[4] | $LD_{50}$ | Toxcat[4] | |
| 3T3 | Acetaminophen | 2046.78 | 5 | 1765.44 | 4 | -281.34 |
| | Sodium dichromate dihydrate | 43.70 | 2 | 51.87 | 3 | 8.17 |
| NHK | Acetaminophen | 2173.95 | 5 | 1755.26 | 4 | -418.69 |
| | Caffeine | 279.63 | 3 | 357.17 | 4 | 77.55 |
| | Sodium dichromate dihydrate | 45.09 | 2 | 51.77 | 3 | 6.69 |

Abbreviations: Toxcat=Globally Harmonized System of Classification and Labelling of Chemicals (GHS; UN 2005); UDP= Up-and-Down Procedure (OECD 2001a, EPA 2002a); NRU=Neutral red uptake; 3T3=BALB/c 3T3 mouse fibroblasts; NHK=Normal human epidermal keratinocytes.

[1]Substances for which the simulated UDP outcome (in terms of GHS category) at the NRU-based starting dose did not match the simulated UDP outcome at the default starting dose. Simulations were performed with 10,000 runs at each starting dose and dose-mortality slope for 67 substances in the 3T3 NRU test method and 68 substances in the NHK NRU test method. Upper limit dose =5000 mg/kg.

[2]NRU-based starting dose was the $LD_{50}$ predicted by the NRU $IC_{50}$ in the RC rat-only millimole regression (log $LD_{50}$ [mmol/kg] = 0.439 log $IC_{50}$ [mM] + 0.621).

[3]The default starting dose = 175 mg/kg. Shaded cells are those containing the correct predictions.

[4]

| GHS Toxicity Category | Oral $LD_{50}$ Limits |
|---|---|
| 1 | $LD_{50} \leq 5$ mg/kg |
| 2 | $5 < LD_{50} \leq 50$ mg/kg |
| 3 | $50 < LD_{50} \leq 300$ mg/kg |
| 4 | $300 < LD_{50} \leq 2000$ mg/kg |
| 5 | $2000 < LD_{50} \leq 5000$ mg/kg |
| 6 | $LD_{50} > 5000$ mg/kg |

# Appendix Q2

## UDP Simulation Results for the RC Rat-Only Weight Regression Starting at the $LD_{50}$ Predicted by the 3T3 and NHK NRU $IC_{50}$ - 5000 mg/kg Upper Limit Dose

***[This Page Intentionally Left Blank]***

## Summary of Animals Used and Animals Dead for UDP Simulations by NRU Test Method[1]

| NRU Test Method | Sigma | Starting Dose | Animals Used | | | | Animals Died | | | | % Savings - Animals Used | % Difference - Animals Died |
|---|---|---|---|---|---|---|---|---|---|---|---|---|
| | | | Std. Error | Number[2] | Difference[3] | P[4] | Std. Error | Number[2] | Difference[3] | P[4] | | |
| 3T3 | 0.12 | Cyto | 0.210 | 7.33 | 0.66 | 0.0013 | 0.224 | 3.60 | -0.15 | 0.2888 | 8.2% | -4.2% |
| | | Default | 0.177 | 7.98 | | | 0.201 | 3.46 | | | | |
| | 0.25 | Cyto | 0.202 | 8.03 | 0.66 | 0.0015 | 0.221 | 3.94 | -0.16 | 0.1284 | 7.6% | -4.3% |
| | | Default | 0.174 | 8.70 | | | 0.196 | 3.78 | | | | |
| | 0.50 | Cyto | 0.184 | 8.67 | 0.68 | 0.0023 | 0.211 | 4.28 | -0.16 | 0.2071 | 7.2% | -3.9% |
| | | Default | 0.160 | 9.35 | | | 0.182 | 4.12 | | | | |
| | 1.25 | Cyto | 0.159 | 9.24 | 0.71 | 0.0009 | 0.187 | 4.65 | -0.10 | 0.9458 | 7.1% | -2.2% |
| | | Default | 0.130 | 9.95 | | | 0.149 | 4.55 | | | | |
| | 2.00 | Cyto | 0.137 | 9.39 | 0.63 | 0.0005 | 0.163 | 4.75 | -0.07 | 0.8240 | 6.2% | -1.4% |
| | | Default | 0.095 | 10.02 | | | 0.127 | 4.68 | | | | |
| | | | Average Difference | | 0.66 | | Average Difference | | -0.13 | | | |
| NHK | 0.12 | Cyto | 0.216 | 7.37 | 0.59 | 0.0021 | 0.230 | 3.55 | -0.15 | 0.1185 | 7.4% | -4.3% |
| | | Default | 0.175 | 7.96 | | | 0.203 | 3.41 | | | | |
| | 0.25 | Cyto | 0.209 | 8.07 | 0.61 | 0.0017 | 0.227 | 3.90 | -0.16 | 0.2017 | 7.0% | -4.3% |
| | | Default | 0.169 | 8.68 | | | 0.197 | 3.74 | | | | |
| | 0.50 | Cyto | 0.189 | 8.73 | 0.62 | 0.0019 | 0.215 | 4.26 | -0.17 | 0.1974 | 6.6% | -4.2% |
| | | Default | 0.153 | 9.35 | | | 0.181 | 4.08 | | | | |
| | 1.25 | Cyto | 0.161 | 9.28 | 0.68 | 0.0004 | 0.190 | 4.63 | -0.10 | 0.8704 | 6.8% | -2.3% |
| | | Default | 0.124 | 9.96 | | | 0.148 | 4.53 | | | | |
| | 2.00 | Cyto | 0.139 | 9.43 | 0.60 | 0.0004 | 0.167 | 4.74 | -0.07 | 0.9230 | 6.0% | -1.5% |
| | | Default | 0.092 | 10.03 | | | 0.125 | 4.66 | | | | |
| | | | Average Difference | | 0.62 | | Average Difference | | -0.13 | | | |

Abbreviations: UDP=Up-and-Down Procedure (OECD 2001a, EPA 2002a); NRU=Neutral red uptake; Sigma=Reciprocal of dose-mortality slope; Cyto=NRU-determined starting dose (i.e., the $LD_{50}$ predicted by the NRU $IC_{50}$ in the RC rat-only weight regression (log $LD_{50}$ [mg/kg] = 0.372 log $IC_{50}$ [mg/mL] + 2.024); Default=Default starting dose of 175 mg/kg; Std. Error=Standard error for number of animals; 3T3= BALB/c 3T3 mouse fibroblasts; NHK=Normal human epidermal keratinocytes; RC=Registry of Cytotoxicity.

[1]For 10,000 UDP simulations at each starting dose and dose-mortality slope for 67 substances in the 3T3 NRU test method and 68 substances in the NHK NRU test method. Upper limit dose =5000 mg/kg.

[2]Mean number of animals for 10,000 simulations.

[3]Difference between mean number of animals for the default starting dose and mean number of animals for the NRU-based starting dose.

[4]P-value is from one-sided Wilcoxon signed rank test for difference in animals between the default and NRU-based starting doses. Significant values at $p < 0.05$.

## Summary of Stopping Rules Used for the UDP Simulations by NRU Test Method[1]

| NRU Test Method | Sigma | Starting Dose | 3 Animals at Limit Dose[2] | 5 Reversals[2] | Likelihood Ratio[2] | Maximum Number of Animals Used[2] |
|---|---|---|---|---|---|---|
| 3T3 | 0.12 | Cyto | 15.8% | 60.2% | 22.9% | 1.1% |
| | | Default | 15.4% | 57.4% | 24.8% | 2.4% |
| | 0.25 | Cyto | 15.1% | 34.2% | 48.1% | 2.6% |
| | | Default | 14.6% | 34.3% | 45.9% | 5.2% |
| | 0.5 | Cyto | 13.7% | 19.6% | 60.8% | 5.8% |
| | | Default | 12.9% | 20.1% | 57.5% | 9.5% |
| | 1.25 | Cyto | 10.4% | 13.3% | 65.1% | 11.2% |
| | | Default | 9.1% | 13.6% | 61.0% | 16.3% |
| | 2 | Cyto | 9.3% | 12.1% | 65.7% | 12.9% |
| | | Default | 7.4% | 12.5% | 62.5% | 17.6% |
| NHK | 0.12 | Cyto | 17.0% | 56.2% | 25.5% | 1.2% |
| | | Default | 16.6% | 56.4% | 24.6% | 2.3% |
| | 0.25 | Cyto | 16.2% | 33.1% | 47.8% | 2.8% |
| | | Default | 15.8% | 33.8% | 45.4% | 5.1% |
| | 0.5 | Cyto | 14.5% | 19.3% | 60.0% | 6.2% |
| | | Default | 13.8% | 19.9% | 56.8% | 9.5% |
| | 1.25 | Cyto | 10.5% | 13.2% | 64.7% | 11.6% |
| | | Default | 9.6% | 13.6% | 60.4% | 16.4% |
| | 2 | Cyto | 9.2% | 12.0% | 65.5% | 13.2% |
| | | Default | 7.6% | 12.5% | 62.1% | 17.7% |

Abbreviations: UDP=Up-and-Down Procedure (OECD 2001a, EPA 2002a); NRU=Neutral red uptake; Sigma=Reciprocal of dose-mortality slope; Cyto=NRU-determined starting dose (i.e., the $LD_{50}$ predicted by the NRU $IC_{50}$ in the RC rat-only weight regression (log $LD_{50}$ [mg/kg] = 0.372 log $IC_{50}$ [µg/mL] + 2.024); Default=Default starting dose of 175 mg/kg; 3T3= BALB/c 3T3 mouse fibroblasts; NHK=Normal human epidermal keratinocytes; RC=Registry of Cytotoxicity.

[1]For 10,000 UDP simulations at each starting dose and dose-mortality slope for 67 substances in the 3T3 NRU test method and 68 substances in the NHK NRU test method. Upper limit dose =5000 mg/kg.

[2]Percentage of the 10,000 test simulations that satisfied the specified condition for completion of testing (see OECD [2001a]; EPA [2002a]).

## Summary of Animals Used and Animals Dead for UDP Simulations by GHS Toxicity Category and NRU Test Method[1]

| Toxcat | NRU Test Method | Sigma | Starting Dose | Animals Used | | | | Animals Died | | | | % Savings - Animals Used | % Difference - Animals Died |
|---|---|---|---|---|---|---|---|---|---|---|---|---|---|
| | | | | Std. Error | Number[2] | Difference[3] | P[4] | Std. Error | Number[2] | Difference[3] | P[4] | | |
| 1 | 3T3 | 0.12 | Cyto | 0.581 | 9.85 | -0.21 | 0.6250 | 0.532 | 6.49 | -0.12 | 0.6250 | -2.2% | -1.9% |
| | | | Default | 0.263 | 9.64 | | | 0.167 | 6.36 | | | | |
| | | 0.25 | Cyto | 0.560 | 10.45 | -0.03 | 1.0000 | 0.515 | 6.87 | -0.05 | 1.0000 | -0.3% | -0.7% |
| | | | Default | 0.188 | 10.42 | | | 0.163 | 6.82 | | | | |
| | | 0.50 | Cyto | 0.582 | 11.06 | 0.12 | 0.8750 | 0.541 | 7.30 | -0.01 | 1.0000 | 1.1% | -0.1% |
| | | | Default | 0.202 | 11.18 | | | 0.198 | 7.29 | | | | |
| | | 1.25 | Cyto | 0.559 | 11.45 | 0.20 | 0.6250 | 0.535 | 7.47 | 0.05 | 1.0000 | 1.7% | 0.6% |
| | | | Default | 0.141 | 11.65 | | | 0.161 | 7.51 | | | | |
| | | 2.00 | Cyto | 0.513 | 11.31 | 0.09 | 0.6250 | 0.488 | 7.19 | 0.02 | 1.0000 | 0.8% | 0.3% |
| | | | Default | 0.116 | 11.40 | | | 0.136 | 7.21 | | | | |
| | | | | Average Difference | | 0.03 | | Average Difference | | -0.02 | | | |
| | NHK | 0.12 | Cyto | 0.773 | 10.35 | -0.80 | 0.6250 | 0.632 | 6.77 | -0.44 | 0.6250 | -8.3% | -7.0% |
| | | | Default | 0.284 | 9.56 | | | 0.176 | 6.33 | | | | |
| | | 0.25 | Cyto | 0.614 | 10.66 | -0.30 | 0.8750 | 0.538 | 7.02 | -0.22 | 0.8750 | -2.9% | -3.2% |
| | | | Default | 0.259 | 10.36 | | | 0.190 | 6.80 | | | | |
| | | 0.50 | Cyto | 0.550 | 11.24 | -0.13 | 0.8750 | 0.512 | 7.45 | -0.18 | 0.8750 | -1.2% | -2.5% |
| | | | Default | 0.247 | 11.11 | | | 0.226 | 7.27 | | | | |
| | | 1.25 | Cyto | 0.510 | 11.60 | 0.03 | 0.8750 | 0.506 | 7.59 | -0.08 | 0.8750 | 0.2% | -1.0% |
| | | | Default | 0.174 | 11.62 | | | 0.189 | 7.51 | | | | |
| | | 2.00 | Cyto | 0.493 | 11.42 | -0.02 | 0.8750 | 0.479 | 7.30 | -0.09 | 0.8750 | -0.2% | -1.3% |
| | | | Default | 0.149 | 11.40 | | | 0.150 | 7.20 | | | | |
| | | | | Average Difference | | -0.24 | | Average Difference | | -0.20 | | | |
| 2 | 3T3 | 0.12 | Cyto | 0.423 | 8.84 | -0.35 | 0.3054 | 0.396 | 5.48 | -0.36 | 0.1677 | -4.1% | -6.9% |
| | | | Default | 0.307 | 8.49 | | | 0.250 | 5.13 | | | | |
| | | 0.25 | Cyto | 0.422 | 9.54 | -0.52 | 0.0942 | 0.390 | 5.88 | -0.44 | 0.0942 | -5.7% | -8.1% |
| | | | Default | 0.214 | 9.02 | | | 0.204 | 5.44 | | | | |
| | | 0.50 | Cyto | 0.449 | 10.13 | -0.58 | 0.1272 | 0.406 | 6.21 | -0.49 | 0.1272 | -6.1% | -8.6% |
| | | | Default | 0.218 | 9.55 | | | 0.205 | 5.72 | | | | |
| | | 1.25 | Cyto | 0.416 | 10.60 | -0.54 | 0.1099 | 0.390 | 6.42 | -0.50 | 0.1099 | -5.3% | -8.4% |
| | | | Default | 0.227 | 10.07 | | | 0.213 | 5.92 | | | | |
| | | 2.00 | Cyto | 0.335 | 10.61 | -0.47 | 0.1272 | 0.330 | 6.31 | -0.44 | 0.1272 | -4.7% | -7.4% |
| | | | Default | 0.174 | 10.13 | | | 0.175 | 5.88 | | | | |
| | | | | Average Difference | | -0.49 | | Average Difference | | -0.44 | | | |
| | NHK | 0.12 | Cyto | 0.423 | 8.74 | -0.23 | 0.4548 | 0.434 | 5.40 | -0.27 | 0.3054 | -2.7% | -5.3% |
| | | | Default | 0.287 | 8.51 | | | 0.239 | 5.13 | | | | |
| | | 0.25 | Cyto | 0.434 | 9.64 | -0.62 | 0.0803 | 0.442 | 5.90 | -0.47 | 0.1677 | -6.9% | -8.6% |
| | | | Default | 0.175 | 9.02 | | | 0.188 | 5.43 | | | | |
| | | 0.50 | Cyto | 0.465 | 10.25 | -0.71 | 0.1099 | 0.460 | 6.25 | -0.54 | 0.1465 | -7.4% | -9.4% |
| | | | Default | 0.158 | 9.54 | | | 0.183 | 5.71 | | | | |
| | | 1.25 | Cyto | 0.445 | 10.70 | -0.61 | 0.1099 | 0.447 | 6.46 | -0.53 | 0.1099 | -6.1% | -9.0% |
| | | | Default | 0.182 | 10.08 | | | 0.194 | 5.92 | | | | |
| | | 2.00 | Cyto | 0.364 | 10.70 | -0.57 | 0.0681 | 0.385 | 6.35 | -0.48 | 0.0803 | -5.6% | -8.2% |
| | | | Default | 0.147 | 10.13 | | | 0.164 | 5.87 | | | | |
| | | | | Average Difference | | -0.55 | | Average Difference | | -0.46 | | | |

## Summary of Animals Used and Animals Dead for UDP Simulations by GHS Toxicity Category and NRU Test Method[1]

| Toxcat | NRU Test Method | Sigma | Starting Dose | Animals Used | | | | Animals Died | | | | % Savings - Animals Used | % Difference - Animals Died |
|---|---|---|---|---|---|---|---|---|---|---|---|---|---|
| | | | | Std. Error | Number[2] | Difference[3] | P[4] | Std. Error | Number[2] | Difference[3] | P[4] | | |
| 3 | 3T3 | 0.12 | Cyto | 0.255 | 7.32 | -0.61 | 0.0522 | 0.213 | 4.02 | -0.60 | 0.0161 | -9.1% | -17.5% |
| | | | Default | 0.212 | 6.71 | | | 0.133 | 3.42 | | | | |
| | | 0.25 | Cyto | 0.269 | 8.07 | -0.78 | 0.0093 | 0.221 | 4.42 | -0.66 | 0.0068 | -10.8% | -17.4% |
| | | | Default | 0.138 | 7.28 | | | 0.094 | 3.76 | | | | |
| | | 0.50 | Cyto | 0.274 | 8.71 | -0.94 | 0.0093 | 0.220 | 4.75 | -0.70 | 0.0068 | -12.2% | -17.3% |
| | | | Default | 0.094 | 7.76 | | | 0.077 | 4.05 | | | | |
| | | 1.25 | Cyto | 0.193 | 9.35 | -0.79 | 0.0049 | 0.170 | 5.04 | -0.58 | 0.0068 | -9.2% | -13.1% |
| | | | Default | 0.059 | 8.56 | | | 0.056 | 4.45 | | | | |
| | | 2.00 | Cyto | 0.120 | 9.54 | -0.48 | 0.0068 | 0.128 | 5.10 | -0.42 | 0.0122 | -5.3% | -8.9% |
| | | | Default | 0.038 | 9.07 | | | 0.047 | 4.69 | | | | |
| | | | | Average Difference | | -0.63 | | Average Difference | | -0.53 | | | |
| | NHK | 0.12 | Cyto | 0.256 | 7.24 | -0.54 | 0.1514 | 0.193 | 3.88 | -0.46 | 0.0923 | -8.0% | -13.6% |
| | | | Default | 0.217 | 6.70 | | | 0.136 | 3.42 | | | | |
| | | 0.25 | Cyto | 0.260 | 7.77 | -0.49 | 0.0425 | 0.193 | 4.16 | -0.40 | 0.0771 | -6.7% | -10.6% |
| | | | Default | 0.165 | 7.29 | | | 0.107 | 3.76 | | | | |
| | | 0.50 | Cyto | 0.228 | 8.38 | -0.58 | 0.0342 | 0.178 | 4.47 | -0.41 | 0.0923 | -7.5% | -10.1% |
| | | | Default | 0.102 | 7.79 | | | 0.080 | 4.06 | | | | |
| | | 1.25 | Cyto | 0.136 | 9.07 | -0.46 | 0.0342 | 0.130 | 4.80 | -0.33 | 0.0771 | -5.3% | -7.3% |
| | | | Default | 0.056 | 8.62 | | | 0.058 | 4.48 | | | | |
| | | 2.00 | Cyto | 0.086 | 9.40 | -0.31 | 0.0122 | 0.102 | 4.94 | -0.25 | 0.1099 | -3.4% | -5.3% |
| | | | Default | 0.035 | 9.09 | | | 0.048 | 4.69 | | | | |
| | | | | Average Difference | | -0.47 | | Average Difference | | -0.37 | | | |
| 4 | 3T3 | 0.12 | Cyto | 0.179 | 6.73 | 0.80 | 0.0092 | 0.053 | 3.30 | 0.15 | 0.0739 | 10.7% | 4.3% |
| | | | Default | 0.259 | 7.53 | | | 0.079 | 3.44 | | | | |
| | | 0.25 | Cyto | 0.173 | 7.34 | 0.69 | 0.0092 | 0.050 | 3.58 | 0.09 | 0.0386 | 8.6% | 2.4% |
| | | | Default | 0.224 | 8.03 | | | 0.057 | 3.66 | | | | |
| | | 0.50 | Cyto | 0.180 | 7.86 | 0.77 | 0.0092 | 0.052 | 3.80 | 0.12 | 0.0507 | 8.9% | 3.1% |
| | | | Default | 0.227 | 8.63 | | | 0.055 | 3.93 | | | | |
| | | 1.25 | Cyto | 0.144 | 8.64 | 0.59 | 0.0092 | 0.050 | 4.16 | 0.02 | 0.2744 | 6.4% | 0.4% |
| | | | Default | 0.147 | 9.23 | | | 0.020 | 4.18 | | | | |
| | | 2.00 | Cyto | 0.104 | 9.03 | 0.41 | 0.0052 | 0.043 | 4.34 | -0.06 | 0.1167 | 4.3% | -1.4% |
| | | | Default | 0.084 | 9.44 | | | 0.018 | 4.28 | | | | |
| | | | | Average Difference | | 0.65 | | Average Difference | | 0.06 | | | |
| | NHK | 0.12 | Cyto | 0.202 | 6.92 | 0.61 | 0.0934 | 0.098 | 3.41 | 0.03 | 0.3484 | 8.2% | 1.0% |
| | | | Default | 0.256 | 7.53 | | | 0.077 | 3.44 | | | | |
| | | 0.25 | Cyto | 0.189 | 7.43 | 0.63 | 0.0443 | 0.076 | 3.64 | 0.04 | 0.0833 | 7.8% | 1.0% |
| | | | Default | 0.216 | 8.06 | | | 0.056 | 3.68 | | | | |
| | | 0.50 | Cyto | 0.201 | 7.92 | 0.73 | 0.0250 | 0.076 | 3.86 | 0.08 | 0.1046 | 8.4% | 2.0% |
| | | | Default | 0.226 | 8.65 | | | 0.056 | 3.94 | | | | |
| | | 1.25 | Cyto | 0.168 | 8.65 | 0.59 | 0.0155 | 0.067 | 4.20 | -0.01 | 0.3755 | 6.4% | -0.3% |
| | | | Default | 0.147 | 9.24 | | | 0.021 | 4.19 | | | | |
| | | 2.00 | Cyto | 0.123 | 9.02 | 0.43 | 0.0155 | 0.056 | 4.37 | -0.08 | 0.0934 | 4.6% | -1.8% |
| | | | Default | 0.087 | 9.45 | | | 0.017 | 4.29 | | | | |
| | | | | Average Difference | | 0.60 | | Average Difference | | 0.01 | | | |

## Summary of Animals Used and Animals Dead for UDP Simulations by GHS Toxicity Category and NRU Test Method[1]

| Toxcat | NRU Test Method | Sigma | Starting Dose | Animals Used | | | | Animals Died | | | | % Savings - Animals Used | % Difference - Animals Died |
|---|---|---|---|---|---|---|---|---|---|---|---|---|---|
| | | | | Std. Error | Number[2] | Difference[3] | P[4] | Std. Error | Number[2] | Difference[3] | P[4] | | |
| 5 | 3T3 | 0.12 | Cyto | 0.287 | 7.12 | 2.07 | 0.0020 | 0.039 | 3.19 | 0.13 | 0.0840 | 22.5% | 4.0% |
| | | | Default | 0.220 | 9.19 | | | 0.042 | 3.32 | | | | |
| | | 0.25 | Cyto | 0.228 | 8.01 | 2.39 | 0.0020 | 0.038 | 3.43 | 0.17 | 0.0488 | 23.0% | 4.8% |
| | | | Default | 0.145 | 10.40 | | | 0.074 | 3.60 | | | | |
| | | 0.50 | Cyto | 0.186 | 8.45 | 2.36 | 0.0020 | 0.047 | 3.52 | 0.16 | 0.0488 | 21.8% | 4.4% |
| | | | Default | 0.091 | 10.81 | | | 0.071 | 3.68 | | | | |
| | | 1.25 | Cyto | 0.133 | 8.55 | 2.21 | 0.0020 | 0.035 | 3.62 | 0.29 | 0.0020 | 20.6% | 7.3% |
| | | | Default | 0.061 | 10.76 | | | 0.034 | 3.91 | | | | |
| | | 2.00 | Cyto | 0.105 | 8.64 | 1.81 | 0.0020 | 0.027 | 3.75 | 0.26 | 0.0020 | 17.4% | 6.5% |
| | | | Default | 0.051 | 10.46 | | | 0.019 | 4.01 | | | | |
| | | | | Average Difference | | 2.17 | | Average Difference | | 0.20 | | | |
| | NHK | 0.12 | Cyto | 0.335 | 7.31 | 1.90 | 0.0020 | 0.048 | 3.22 | 0.11 | 0.3223 | 20.6% | 3.3% |
| | | | Default | 0.219 | 9.21 | | | 0.057 | 3.33 | | | | |
| | | 0.25 | Cyto | 0.301 | 8.17 | 2.21 | 0.0020 | 0.047 | 3.44 | 0.16 | 0.2324 | 21.3% | 4.4% |
| | | | Default | 0.114 | 10.38 | | | 0.081 | 3.60 | | | | |
| | | 0.50 | Cyto | 0.224 | 8.62 | 2.16 | 0.0020 | 0.039 | 3.56 | 0.11 | 0.2754 | 20.1% | 3.1% |
| | | | Default | 0.065 | 10.79 | | | 0.077 | 3.67 | | | | |
| | | 1.25 | Cyto | 0.148 | 8.73 | 2.01 | 0.0020 | 0.038 | 3.67 | 0.22 | 0.0039 | 18.7% | 5.6% |
| | | | Default | 0.051 | 10.74 | | | 0.041 | 3.89 | | | | |
| | | 2.00 | Cyto | 0.114 | 8.78 | 1.66 | 0.0020 | 0.036 | 3.79 | 0.21 | 0.0020 | 15.9% | 5.3% |
| | | | Default | 0.039 | 10.44 | | | 0.023 | 4.00 | | | | |
| | | | | Average Difference | | 1.99 | | Average Difference | | 0.16 | | | |
| 6 | 3T3 | 0.12 | Cyto | 0.596 | 5.75 | 1.99 | 0.0005 | 0.327 | 0.91 | -0.06 | 0.0923 | 25.7% | -7.5% |
| | | | Default | 0.575 | 7.74 | | | 0.300 | 0.84 | | | | |
| | | 0.25 | Cyto | 0.574 | 6.61 | 2.02 | 0.0005 | 0.335 | 1.40 | -0.10 | 0.0015 | 23.4% | -8.1% |
| | | | Default | 0.529 | 8.63 | | | 0.305 | 1.29 | | | | |
| | | 0.50 | Cyto | 0.411 | 7.69 | 2.15 | 0.0005 | 0.258 | 2.10 | -0.08 | 0.0068 | 21.8% | -3.7% |
| | | | Default | 0.335 | 9.83 | | | 0.253 | 2.02 | | | | |
| | | 1.25 | Cyto | 0.241 | 8.42 | 2.46 | 0.0005 | 0.125 | 2.98 | 0.21 | 0.0010 | 22.6% | 6.6% |
| | | | Default | 0.062 | 10.88 | | | 0.123 | 3.19 | | | | |
| | | 2.00 | Cyto | 0.194 | 8.47 | 2.31 | 0.0005 | 0.088 | 3.29 | 0.33 | 0.0005 | 21.4% | 9.0% |
| | | | Default | 0.021 | 10.78 | | | 0.069 | 3.62 | | | | |
| | | | | Average Difference | | 2.19 | | Average Difference | | 0.06 | | | |
| | NHK | 0.12 | Cyto | 0.588 | 5.79 | 1.84 | 0.0002 | 0.310 | 0.85 | -0.06 | 0.0327 | 24.1% | -7.7% |
| | | | Default | 0.548 | 7.63 | | | 0.285 | 0.79 | | | | |
| | | 0.25 | Cyto | 0.561 | 6.72 | 1.87 | 0.0002 | 0.318 | 1.36 | -0.11 | 0.0012 | 21.8% | -8.9% |
| | | | Default | 0.486 | 8.59 | | | 0.283 | 1.25 | | | | |
| | | 0.50 | Cyto | 0.413 | 7.85 | 1.97 | 0.0002 | 0.247 | 2.11 | -0.11 | 0.0046 | 20.1% | -5.4% |
| | | | Default | 0.309 | 9.83 | | | 0.232 | 2.00 | | | | |
| | | 1.25 | Cyto | 0.240 | 8.56 | 2.31 | 0.0002 | 0.121 | 3.02 | 0.16 | 0.0061 | 21.2% | 5.0% |
| | | | Default | 0.059 | 10.87 | | | 0.115 | 3.18 | | | | |
| | | 2.00 | Cyto | 0.194 | 8.57 | 2.21 | 0.0002 | 0.085 | 3.33 | 0.30 | 0.0005 | 20.5% | 8.2% |
| | | | Default | 0.021 | 10.78 | | | 0.063 | 3.62 | | | | |
| | | | | Average Difference | | 2.04 | | Average Difference | | 0.03 | | | |

Abbreviations: UDP=Up-and-Down Procedure (OECD 2001a, EPA 2002a); Toxcat=Category from Globally Harmonized System of Classification and Labeling of Chemicals[5] (GHS; UN 2005); NRU=Neutral red uptake; Sigma=Reciprocal of dose-mortality slope; Cyto=NRU-determined starting dose (i.e., the $LD_{50}$ predicted by the NRU $IC_{50}$ in the RC rat-only weight regression (log $LD_{50}$ [mmol/kg] = 0.372 log $IC_{50}$ [mM] + 2.024); Default=Default starting dose of 175 mg/kg; Std. Error=Standard error for number of animals; 3T3= BALB/c 3T3 mouse fibroblasts; NHK=Normal human epidermal keratinocytes; RC=Registry of Cytotoxicity.

[1]For 10,000 UDP simulations at each starting dose and dose-mortality slope for 67 substances in the 3T3 NRU test method and 68 substances in the NHK NRU test method. Upper limit dose =5000 mg/kg.

[2]Mean number of animals for 10,000 simulations.

[3]Difference between mean animals used for the default starting dose and mean animals used for the NRU-based starting dose.

[4]P-value is from one-side Wilcoxon signed rank test for difference in animals between the default and NRU-based starting doses. Significant values at $p < 0.05$.

| [5]GHS Toxicity Category | Oral $LD_{50}$ Limits |
|---|---|
| 1 | $LD_{50} \leq 5$ mg/kg |
| 2 | $5 < LD_{50} \leq 50$ mg/kg |
| 3 | $50 < LD_{50} \leq 300$ mg/kg |
| 4 | $300 < LD_{50} \leq 2000$ mg/kg |
| 5 | $2000 < LD_{50} \leq 5000$ mg/kg |
| 6 | $LD_{50} > 5000$ mg/kg |

## Concordance of NRU-Based Starting Dose with Default Starting Dose for GHS Acute Oral Toxicity Category Outcome Based on Simulated UDP $LD_{50}$[1]

| GHS Category Based on $LD_{50}$ Outcome with Default Starting Dose | GHS Category Based on $LD_{50}$ Outcome with NHK NRU-Based Starting Dose | | | | | | | | | |
|---|---|---|---|---|---|---|---|---|---|---|
| | 1 | 2 | 3 | 4 | 5 | 6 | Total | Category Match | Higher NRU Category | Lower NRU Category |
| **1** | 4 | 0 | 0 | 0 | 0 | 0 | 4 | 100% | 0% | 0% |
| **2** | 0 | 13 | 0 | 0 | 0 | 0 | 13 | 100% | 0% | 0% |
| **3** | 0 | 1 | 11 | 0 | 0 | 0 | 12 | 92% | 0% | 8% |
| **4** | 0 | 0 | 1 | 15 | 1 | 0 | 17 | 88% | 6% | 6% |
| **5** | 0 | 0 | 0 | 0 | 22 | 0 | 22 | 100% | 0% | 0% |
| **6** | 0 | 0 | 0 | 0 | 0 | 0 | 0 | NA | 0% | NA |
| **Total** | 4 | 14 | 12 | 15 | 23 | 0 | 68 | 96% | 1% | 3% |

| GHS Category Based on $LD_{50}$ Outcome with Default Starting Dose | GHS Category Based on $LD_{50}$ Outcome with 3T3 NRU-Based Starting Dose | | | | | | | | | |
|---|---|---|---|---|---|---|---|---|---|---|
| | 1 | 2 | 3 | 4 | 5 | 6 | Total | Category Match | Higher NRU Category | Lower NRU Category |
| **1** | 4 | 0 | 0 | 0 | 0 | 0 | 4 | 100% | 0% | 0% |
| **2** | 0 | 13 | 0 | 0 | 0 | 0 | 13 | 100% | 0% | 0% |
| **3** | 0 | 1 | 11 | 0 | 0 | 0 | 12 | 92% | 0% | 8% |
| **4** | 0 | 0 | 1 | 14 | 2 | 0 | 17 | 82% | 12% | 6% |
| **5** | 0 | 0 | 0 | 0 | 21 | 0 | 21 | 100% | 0% | 0% |
| **6** | 0 | 0 | 0 | 0 | 0 | 0 | 0 | NA | 0% | NA |
| **Total** | 4 | 14 | 12 | 14 | 23 | 0 | 67 | 94% | 3% | 3% |

Abbreviations: NRU=Neutral red uptake; GHS=Globally Harmonized System of Classification and Labelling of Chemicals (UN 2005); UDP=Up-and-Down Procedure (OECD 2001a, EPA 2002a); 3T3= BALB/c 3T3 mouse fibroblasts; NHK=Normal human epidermal keratinocytes; NA=Not applicable; RC=Registry of Cytotoxicity.

[1]For 10,000 UDP simulations at each starting dose and dose-mortality slope for 67 substances in the 3T3 NRU test method and 68 substances in the NHK NRU test method. Upper limit dose =5000 mg/kg. The NRU-based starting dose was the $LD_{50}$ predicted by the NRU $IC_{50}$ in the RC rat-only weight regression (log $LD_{50}$ [mg/kg] = 0.372 log $IC_{50}$ [µg/mL] + 2.024). The default starting dose = 175 mg/kg. Shaded cells are those containing the correct predictions.

| [2]GHS Toxicity Category | Oral $LD_{50}$ Limits |
|---|---|
| 1 | $LD_{50} \leq 5$ mg/kg |
| 2 | $5 < LD_{50} \leq 50$ mg/kg |
| 3 | $50 < LD_{50} \leq 300$ mg/kg |
| 4 | $300 < LD_{50} \leq 2000$ mg/kg |
| 5 | $2000 < LD_{50} \leq 5000$ mg/kg |
| 6 | $LD_{50} > 5000$ mg/kg |

## Discordant Substances for GHS Category Outcomes of UDP Simulations[1]

| NRU Test Method | Substance | NRU-Based Starting Dose[2] | | Default Starting Dose[3] | | $LD_{50}$ Difference |
|---|---|---|---|---|---|---|
| | | $LD_{50}$ | Toxcat[4] | $LD_{50}$ | Toxcat[4] | |
| 3T3 | Acetaminophen | 2146.93 | 5 | 1768.39 | 4 | -378.54 |
| | Caffeine | 297.82 | 3 | 342.76 | 4 | 44.95 |
| | Procainamide HCl | 2000.24 | 5 | 1529.98 | 4 | -470.26 |
| | Sodium dichromate dihydrate | 44.48 | 2 | 52.17 | 3 | 7.69 |
| NHK | Acetaminophen | 2171.18 | 5 | 1755.21 | 4 | -415.96 |
| | Caffeine | 292.06 | 3 | 353.96 | 4 | 61.91 |
| | Sodium dichromate dihydrate | 45.85 | 2 | 51.91 | 3 | 6.06 |

Abbreviations: Toxcat=Globally Harmonized System of Classification and Labelling of Chemicals (GHS; UN 2005); UDP= Up-and-Down Procedure (OECD 2001a, EPA 2002a); NRU=Neutral red uptake; 3T3=BALB/c 3T3 mouse fibroblasts; NHK=Normal human epidermal keratinocytes.

[1]Substances for which the simulated UDP outcome (in terms of GHS category) at the NRU-based starting dose did not match the simulated UDP outcome at the default starting dose. Simulations were performed with 10,000 runs at each starting dose and dose-mortality slope for 67 substances in the 3T3 NRU test method and 68 substances in the NHK NRU test method. Upper limit dose =5000 mg/kg.

[2]NRU-based starting dose was the $LD_{50}$ predicted by the NRU $IC_{50}$ in the RC rat-only weight regression (log $LD_{50}$ [mg/kg] = 0.372 log $IC_{50}$ [µg/mL] + 2.024).

[3]The default starting dose = 175 mg/kg. Shaded cells are those containing the correct predictions.

[4]

| GHS Toxicity Category | Oral $LD_{50}$ Limits |
|---|---|
| 1 | $LD_{50} \leq 5$ mg/kg |
| 2 | $5 < LD_{50} \leq 50$ mg/kg |
| 3 | $50 < LD_{50} \leq 300$ mg/kg |
| 4 | $300 < LD_{50} \leq 2000$ mg/kg |
| 5 | $2000 < LD_{50} \leq 5000$ mg/kg |
| 6 | $LD_{50} > 5000$ mg/kg |